TRANQUILLITY HIGH SCHOOL
INCREMENT 1 AQUATIC CENTER MODERNIZATION
GOLDEN PLAINS UNIFIED SCHOOL DISTRICT

PTN: 75234-53 DSA FILE NO.: #10-H24 DSA APP NO.: #02-123309

THE COUNTY OF FRESNO

County of Fresno
DEPARTMENT OF PUBLIC HEALTH
Joe Prado, Interim Director
Dr. Rais Vohra, Interim Health Officer

August 29, 2025 FA00003750

Tony Pavone, NCARB
AGD Architecture Design
1238 Monterey Street
San Luis Obispo, CA 93422

Dear Tony Pavone:

Subject: Public Swimming Pools
Location: Tranquillity High School – Aquatic Center Modernization
6052 S. Juanche Ave., Tranquillity, CA

The plan for the above project has been reviewed and approved by this department. **Any additional changes or addendum to these plans must be approved by this office prior to construction of said changes.**

During construction, the following progress inspections are required:

1) Exposed plumbing/Pre-Gunite
2) Pre-Plaster
3) Final

Before permit issuance, the permit fee must be paid and final inspection completed. Please contact me at (559) 600-3357 at least four days in advance to schedule an inspection.

Sincerely,

Aaron Baruti, R.E.H.S.
Environmental Health Specialist
Environmental Health Division

AB/gg

c: Amy Guthrie, Environmental Health Division
Golden Plains Unified School District, 22000 Nevada Street, San Joaquin, CA 93660

Promotion, preservation, and protection of the community's health
1221 Fulton Street, Fresno, CA 93721 | P.O. Box 11867, Fresno, CA 93721
(559) 600-3357 | FAX (559) 455-4646
The County of Fresno is an Equal Employment Opportunity Employer
www.fresnocountyca.gov | www.fcdph.org

1. A COPY TITLE 24 C.C.R. PARTS 1 AND 2 SHALL BE KEPT BY THE CONTRACTOR ON THE JOB SITE AT ALL TIMES.
2. THE INTENT OF THE DRAWINGS AND SPECIFICATIONS IS TO CONSTRUCT THE PROJECT IN ACCORDANCE WITH TITLE 24 C.C.R. SHOULD ANY CONDITIONS DEVELOP NOT COVERED BY THE CONTRACT DOCUMENTS WHEREIN THE FINISHED WORK WILL NOT COMPLY WITH SAID TITLE 24, C.C.R., A CHANGE ORDER DETAILING AND SPECIFYING THE REQUIRED WORK SHALL BE SUBMITTED TO AND APPROVED BY DSA BEFORE PROCEEDING WITH THE WORK.
3. NO CHANGES OR REVISIONS SHALL BE MADE FOLLOWING WRITTEN APPROVAL BY THE OWNER OR ARCHTECT WHICH AFFECTS STRUCTURAL, ACCESS COMPLIANCE OR FIRE LIFE & SAFETY ITEMS UNLESS SUCH CHANGES OR REVISIONS ARE SUBMITTED TO THE DSA FOR APPROVAL.
4. CHANGES, SUBSTITUTIONS OR ADDENDA MADE TO THE STRUCTURAL, ACCESSIBILITY OR FIRE AND LIFE-SAFETY PORTIONS OF THE APPROVED PLANS AND SPECIFICATIONS AFTER THE WORK HAS BEEN APPROVED BY DSA SHALL BE MADE BY A CONSTRUCTION CHANGE DOCUMENT (CCD) AS REQUIRED IN SECTION 4-338, PART I, CAC, AND SHALL BE SUBMITTED TO, AND APPROVED BY DSA PRIOR TO COMMENCEMENT OF THE WORK, FABRICATION OR USE. CONSTRUCTION CHANGE DOCUMENTS SHALL BE PREPARED AND SUBMITTED TO DSA IN COMPLIANCE WITH DSA INTERPRETATION OF REGULATION IR A-6.
5. ADDENDA MUST BE SIGNED BY ARCHITECT AND APPROVED BY DSA.
6. CONSTRUCTION CHANGE DOCUMENTS MUST BE SIGNED BY THE FOLLOWING:
   - ARCHITECT OR ENGINEER OF RECORD
   - STRUCTURAL ENGINEER (WHEN APPLICABLE)
   - DELEGATED PROFESSIONAL ENGINEER
7. ALL TESTS AND INSPECTIONS ARE TO CONFORM TO THE REQUIREMENTS OF TITLE 24 SECTION 4-335, PART 1, AND APPROVED T & I SHEET.
8. TESTS OF MATERIALS AND TESTING LABORATORY SHALL BE IN ACCORDANCE WITH TITLE 24 SECTION 4-335, PART I, AND THE DISTRICT SHALL EMPLOY AND PAY THE LABORATORY. COSTS OF RETEST MAY BE BACK CHARGED TO THE CONTRACTOR AT OWNER AND ARCHITECTS REQUEST.
9. DSA SHALL BE NOTIFIED BY THE SCHOOL DISTRICT AND/OR ARCHITECT AT THE START OF CONSTRUCTION AND PRIOR TO THE PLACEMENT OF THE CONCRETE PER TITLE 24 SECTION 4-331, PART I.
10. A CLASS 2 INSPECTOR SHALL BE REQUIRED FOR THIS PROJECT, EMPLOYED BY OWNER. THE INSPECTOR SHALL BE APPROVED BY ARCHITECT, STRUCTURAL ENGINEER, AND DSA. INSPECTOR SHALL BE IN ACCORDANCE WITH SECTION 4-333(c). THE DUTY OF THE INSPECTOR SHALL BE IN ACCORDANCE WITH TITLE 24 SECTION 4-342, PART I.
11. SUPERVISION OF CONSTRUCTION BY DSA SHALL BE IN ACCORDANCE WITH TITLE 24 SECTION 4-334, PART 1.
12. CONTRACTOR, INSPECTOR, ARCHITECT, AND ENGINEERS SHALL SUBMIT VERIFIED REPORTS (DSA FORM 6-AE) IN ACCORDANCE WITH TITLE 24 SECTION 4-336, PART I.
13. THE ARCHITECT AND THE STRUCTURAL ENGINEER SHALL PERFORM THEIR DUTIES IN ACCORDANCE WITH TITLE 24 SECTION 4-333(a) AND 4-341, PART I.
14. THE CONTRACTOR SHALL PERFORM HIS DUTIES IN ACCORDANCE WITH TITLE 24 SECTION 4-343, PART I.
15. MATERIALS AND THEIR INSTALLATION SHALL COMPLY WITH APPLICABLE CODES, STANDARDS AND MANUFACTURER'S RECOMMENDATIONS.
16. THESE PLANS AND SPECIFICATIONS WILL COMPLY WITH CFC CHAPTER 33 FIRE SAFETY DURING CONSTRUCTION AND DEMOLITION.
17. GRADING PLANS, DRAINAGE IMPROVEMENTS, ROAD AND ACCESS REQUIREMENTS AND ENVIRONMENTAL HEALTH CONSIDERATIONS SHALL COMPLY WITH ALL LOCAL ORDINANCES.
18. DSA IS NOT SUBJECT TO ARBITRATION.
19. ALL CONSTRUCTION AND DEMOLITION SHALL BE IN ACCORDANCE WITH CHAPTER 33 OF THE CBC AND CFC, AND THE WRITTEN SITE SAFETY PLAN. CONTRACTOR SHALL PROVIDE A SITE SAFETY PLAN FOR ALL CONSTRUCTION AND DEMOLITION

    THE SAFETY PLAN SHALL INCLUDE BUT NOT LIMITED TO THE FOLLOWING:

    - NAME AND CONTACT INFORMATION OF SITE SAFETY DIRECTOR
    - DOCUMENTATION OF TRAINING OF THE SITE SAFETY DIRECTOR AND FIRE WATCH PERSONEL
    - PROCEDURES FOR REPORTING EMERGENCIES
    - FIRE DEPARTMENT VEHICLE ACCESS ROUTES
    - LOCATIONS OF FIRE PROTECTION EQUIPMENT, INCLUDING PORTABLE FIRE EXTINGUISHER, STANDPIPES, FIRE DEPARTMENT CONNECTIONS AND FIRE HYDRANTS
    - SMOKING AND COOKING POLICIES, DESIGNATED AREA TO BE USED WHERE APPROVED, AND SIGNAGE LOCATIONS IN ACCORDANCE WITH CFC SECTION 3305.8
    - LOCATIONS AND SAFETY CONSIDERATIONS FOR TEMPORARY HEATING EQUIPMENT
    - HOT WORK (WELDING, ROOFING, ETC.) PLAN.
    - PLANS FOR CONTROL OF COMBUSTIBLE WASTE
    - LOCATIONS AND METHODS FOR STORAGE AND USE OF FLAMMABLE AND COMBUSTIBLE LIQUIDS AND OTHER HAZARDOUS MATERIALS
    - PROVISIONS FOR SITE SECURITY
    - CHANGES THAT AFFECT THIS PLAN
    - OTHER SITE - SPECIFIC INFORMATION REQUESTED BY THE LOCAL FIRE AUTHORITY (LFA)

GENERAL NOTES

FOR ARCHITECTS/ENGINEERS WHO UTILIZE PLANS, INCLUDING BUT NOT LIMITED TO SHOP DRAWINGS, PREPARED BY OTHER LICENSED DESIGN PROFESSIONALS AND/OR CONSULTANTS.

APPLICATION NO:. 02-123309 **FILE NO:** 10 - H24

- ■ THE DRAWINGS OR SHEETS LISTED ON THE COVER OR INDEX SHEET
- ■ THIS DRAWING, PAGE OF SPECIFICATIONS/CALCULATIONS

HAVE BEEN PREPARED BY OTHER DESIGN PROFESSIONALS OR CONSULTANTS WHO ARE LICENSED AND/OR AUTHORIZED TO PREPARE SUCH DRAWINGS IN THIS STATE. IT HAS BEEN EXAMINED BY ME FOR:

1. DESIGN INTENT AND APPEARS TO MEET THE APPROPRIATE REQUIREMENTS OF TITLE 24, CALIFORNIA CODE OF REGULATIONS AND THE PROJECT SPECIFICATIONS PREPARED BY ME, AND
2. COORDINATION WITH MY PLANS AND SPECIFICATIONS AND IS ACCEPTABLE FOR INCORPORATION INTO THE CONSTRUCTION OF THIS PROJECT.

THE STATEMENT OF GENERAL CONFORMANCE "SHALL NOT BE CONSTRUED AS RELIEVING ME OF MY RIGHTS, DUTIES, AND RESPONSIBILITIES UNDER SECTIONS 17302 AND 81138 OF THE EDUCATION CODE AND SECTIONS 4-336, 4-341, AND 4-344" (TITLE 24, PART, SECTION 4-316 (b))

I CERTIFY THAT:

- ■ ALL DRAWINGS OR SHEETS LISTED ON THE COVER OR INDEX
- ☐ THIS DRAWING OR PAGE
- ■ IS/ARE IN GENERAL CONFORMANCE AND HAVE BEEN COORDINATED

ARCHITECT'S SIGNATURE **DATE** 8/14/2025

ANTONIO PAVONE
PRINCIPAL ARCHITECT
ANDREW GOODWIN DESIGNS

C39058 09/30/2025
LICENSE NUMBER **EXPIRATION DATE**

STATEMENT OF GENERAL CONFORMANCE

OWNER
GOLDEN PLAINS USD
22000 NEVADA STREET
SAN JOAQUIN, CA, 93660
PHONE: (559) 210-5801
CONTACT: FELIPE PIEDRA
EMAIL: fpiedra@gpusd.org

PROJECT ARCHITECT
ANDREW GOODWIN DESIGNS
1238 MONTEREY STREET
SAN LUIS OBISPO, CA 93401
(559) 439-1611
CONTACT: TONY PAVONE
E-MAIL: tony@andrewgoodwin.us

AQUATIC CONSULTANT
RS+M DESIGN ENGINEERING
1981 NORTH BROADWAY, SUITE 202
WALNUT CREEK, CA, 94596
PHONE (925) 217-6619
CONTACT: BERNIE ROGERS
EMAIL: bernie.rogers@rsm-de.com

CIVIL ENGINEER / LANDSCAPE
BLAIR, CHURCH & FLYNN
451 CLOVIS AVE, SUITE 200
CLOVIS, CA, 93612
PHONE (559) 326-1400
CONTACT: LANE BADER
EMAIL: lbader@bcf-engr.com

STRUCTURAL ENGINEER
BUEHLER ENGINEERING INC.
811 EL CAPITAN WAY, SUITE 240
SAN LUIS OBISPO, CA 93401
(805) 439-2110
CONTACT: MICHAEL PAROLINI
E-MAIL: mparolini@buehlerengineering.com

MECHANICAL/PLUMBING ENGINEER
3C ENGINEERING INC.
1500 PALM STREET
SAN LUIS OBISPO, CA 93401
(805) 540-3363
CONTACT: BRIAN STARRETT, PE
E-MAIL: bstarrett@3ceng.com

ELECTRICAL ENGINEER
AURUM CONSULTING ENGINEERS, INC.
1798 TECHNOLOGY DRIVE, SUITE 242
SAN JOSE, CA 95110
(831) 646-3336
CONTACT: NAJIB ANWARY P.E LEED AP (BD+C)
E-MAIL: najib@acemb.com

PROJECT DIRECTORY

INCREMENT 1:
TRANQUILLITY HIGH SCHOOL AQUATIC CENTER MODERNIZATION CONSISTS OF NEW POOL EQUIPMENT BUILDING, MODERNIZATION OF DIVE POOL (DSA A# 33437) CONVERSION INTO A LEARN TO SWIM POOL, NEW 10-LANE MODULAR SWIMMING POOL, NEW FABRIC SHADE STRUCTURE, NEW PC APPROVED SCOREBOARD, NEW WATERSLIDE, NEW SPLASH PAD AREA, LANDSCAPING, AND CONCRETE POOL DECK, AND NEW UTILITIES, AND ASSOCIATED SITE ACCESS.

INCREMENT 2:
TRANQUILLITY HIGH SCHOOL AQUATIC CENTER MODERNIZATION CONSIST OF NEW 2,020 SF OF NEW MODULAR CONCESSIONS BUILDING AND NEW 2,880 SF PERMANENT MODULAR CLASSROOM

PROJECT DESCRIPTION

'NONE'

DEFERRED SUBMITTAL

2025 CALIFORNIA ADMINISTRATIVE CODE (CAC), C.C.R. TITLE 24, PART 1
2022 CALIFORNIA BUILDING CODE (CBC), C.C.R. TITLE 24, PART 2
2022 CALIFORNIA ELECTRICAL CODE (CEC), C.C.R. TITLE 24, PART 3
2022 CALIFORNIA MECHANICAL CODE (CMC), C.C.R. TITLE 24, PART 4
2022 CALIFORNIA PLUMBING CODE (CPC), C.C.R. TITLE 24, PART 5
2022 CALIFORNIA FIRE CODE (CFC), C.C.R. TITLE 24, PART 9
2022 CALIFORNIA REFERENCED STANDARDS CODE, C.C.R. TITLE 24, PART 12
2022 CALIFORNIA ENERGY CODE (CAC), C.C.R. TITLE 24, PART 6
2022 CALIFORNIA GREEN BUILDING STANDARDS CODE (CALGREEN), C.C.R. TITLE 24, PART 11
C.C.R., TITLE 19 PUBLIC SAFETY
NFPA 13-22 STANDARD FOR THE INSTALLATION OF SPRINKLER SYSTEMS (AS AMENDED)
NFPA 24-22 INSTALLATION OF PRIVATE FIRE SERVICE MAINS AND THEIR APPURTENANCES (AS AMENDED)
NFPA 25-13CA (CALIFORNIA NFPA 25 EDITION) INSPECTION, TESTING, AND MAINTENANCE OF WATER-BASED FIRE PROTECTION SYSTEMS
NFPA 72-22 NATIONAL FIRE ALARM AND SIGNALING CODE (AS AMENDED)
UL 38-99 MANUALLY ACTUATED SIGNALING BOXES (AS AMENDED)
UL 268-09 SMOKE DETECTORS FOR FIRE ALARM SYSTEMS
UL 268A-09 SMOKE DETECTORS FOR DUCT APPLICATION (AS AMENDED)
UL 464-03 AUDIBLE SIGNAL APPLIANCES (AS AMENDED)
UL 521-99 HEAT DETECTORS FOR FIRE PROTECTIVE SIGNALING SYSTEMS (AS AMENDED)
UL 1424 CABLES FOR POWER-LIMITED FIRE-ALARM CIRCUITS (2005 EDITION)
UL 1971 SIGNALING DEVICES FOR THE HEARING IMPAIRED (2004 EDITION)
AMERICANS WITH DISABILITIES ACT

PROJECT INFORMATION

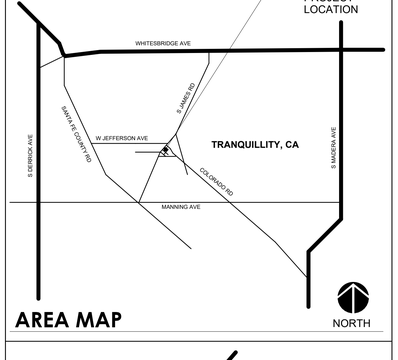

AREA MAP

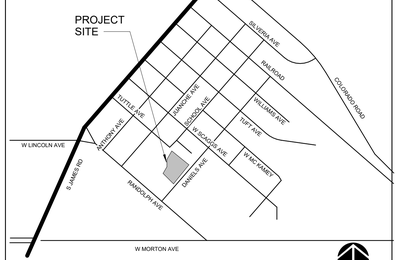

VICINITY MAP

COUNTY OF FRESNO ENVIRONMENTAL HEALTH DIVISION
1221 Fulton Street – 3rd Floor (559) 600-3357
APPROVED
WITH NOTED CORRECTIONS AND
SUBJECT TO FIELD INSPECTIONS
BY: DATE 8/16/25
APPROVAL OF THIS PLAN DOES NOT CONSTITUTE PERMISSION TO VIOLATE ANY APPLICABLE CITY OR COUNTY ORDINANCE, OR STATE LAW, AND SHALL NOT PREVENT THE DEPARTMENT FROM REQUIRING CORRECTION OF ERRORS OR OMISSIONS IN PLANS, SPECIFICATIONS OR CONSTRUCTION.

AGD ARCHITECTURE | DESIGN

ANDREW GOODWIN DESIGNS
1238 MONTEREY STREET
SAN LUIS OBISPO, CA 93422
t: (805) 439-1611
www.andrewgoodwin.us

These drawings are instruments of service and are the property of Andrew Goodwin Designs, Inc. The information represented on these drawings are exclusively for the project indicated and shall not be transferred or otherwise reproduced without express written permission of Andrew Goodwin. Copyright 2025

REVISIONS

REV #	REV DATE	REV DESCRIPTION

SEAL

LICENSED ARCHITECT ANTONIO PAVONE C-39058 EXP. 09/30/2025 STATE OF CALIFORNIA
NOT FOR CONSTRUCTION

PROJECT

TRANQUILLITY HIGH SCHOOL
INCREMENT 1 AQUATIC CENTER MODERNIZATION
6052 Juanche Ave,
Tranquillity, CA 93668

CLIENT

GOLDEN PLAINS UNIFIED SCHOOL DISTRICT

SHEET TITLE

COVER

PHASE DESCRIPTION
100% CD FCHD APPROVAL SWIMMING POOL

DATE: 8/26/2025
TECHNICIAN: RT / JL
PROJECT MANAGER: TP
JOB NUMBER: 791

SHEET NUMBER
G0.00-1

PLOT DATE: 8/13/2025 3:22:15 PM

GENERAL	
G0.00	COVER
G0.01-1	SHEET INDEX
G0.02-1	SITE CODE ANALYSIS
CIVIL	
C6.01-1	UTILITY PLAN
CX1.01-1	DETAILS
CX1.02-1	DETAILS
CX1.03-1	DETAILS
CX1.04-1	DETAILS
ARCHITECTURAL	
A1.00-1	PROPOSED OVERALL SITE PLAN
A1.11-1	ENLARGED PROPOSED SITE PLAN
A2.10-1	BUILDING P - PROPOSED FLOOR PLAN, RCP, & ROOF PLAN
A8.00-1	ACCESSIBILITY DETAILS
MECHANICAL	
M0.00-1	BUILDING P - GENERAL & SCHEDULES
M1.14-1	BUILDING P - FLOOR PLAN
PLUMBING	
P0.00-1	BUILDING P - GENERAL & SCHEDULES
P0.01-1	BUILDING P - DETAILS
P1.00-1	BUILDING P - SITE PLAN
P1.14-1	BUILDING P - FLOOR PLANS
ELECTRICAL	
E001-1	SYMBOLS, ABBREVIATIONS, LIGHT FIXTURE SCHEDULE, CODES, STANDARDS & SHEET INDEX
E201-1	OVERALL SITE PLAN
E202-1	ENLARGED SITE PLAN
E401-1	BUILDING P - POWER & LIGHTING PLAN
E601-1	ELECTRICAL DETAILS
E602-1	ELECTRICAL DETAILS
E603-1	ELECTRICAL DETAILS

AQUATICS	
SP0.0-1	PROJECT SITE PLAN
SP0.1-1	SWIMMING POOL SIGNAGE DETAILS
SP1.0-1	COMPETITION POOL LAYOUT PLAN
SP1.1-1	COMPETITION POOL SECTIONS
SP1.2-1	TEACHING POOL LAYOUT PLAN
SP1.3-1	TEACHING POOL SECTIONS
SP1.4-1	SPLASH PAD LAYOUT PLAN
SP1.5-1	SPLASH PAD SECTION
SP1.6-1	COMPETION POOL FINISH DETAILS
SP1.7-1	TEACHING POOL FINISH DETAILS
SP2.0-1	COMPETITION POOL FOUNDATION PLAN
SP2.1-1	TEACHING POOL STRUCTURAL PLAN
SP2.2-1	SPLASH PAD STRUCTURAL PLAN
SP2.3-1	COMPETITION POOL STRUCTURAL DETAILS
SP2.4-1	TEACHING POOL STRUCTURAL DETAILS
SP3.0-1	SITE PIPING PLAN
SP3.1-1	COMPETION POOL PIPING PLAN
SP3.2-1	TEACHING POOL PIPING PLAN
SP3.3-1	SPLASH PAD PIPING PLAN
SP3.4-1	COMPETION POOL PIPING DETAILS
SP3.5-1	TEACHING POOL PIPING DETAILS
SP3.6-1	SPLASH PAD/TYP. PIPING DETAILS
SP4.0-1	BUILDING P EQUIPMENT ROOM PLAN
SP4.1-1	BUILDING P EQUIPMENT ROOM PIPING PLAN
SP4.2-1	BUILDING P EQUIPMENT ROOM ELEVATIONS
SP4.3-1	BUILDING P EQUIPMENT ROOM ELEVATIONS
SP4.4-1	BUILDING P EQUIPMENT ROOM SCHEMATICS
SP4.5-1	BUILDING P EQUIPMENT ROOM SCHEMATICS
SP4.6-1	BUILDING P EQUIPMENT ROOM DETAILS
SP4.7-1	BUILDING P EQUIPMENT ROOM DETAILS
SP4.8-1	BUILDING P EQUIPMENT ROOM ANCHORAGE DETAILS
SP5.0-1	SWIMMING POOL ELECTRICAL NOTES
SP5.1-1	SWIMMING POOL ELECTRICAL SITE PLAN
SP5.2-1	BUILDING P EQUIPMENT ROOM ELECTRICAL PLAN
SP6.0-1	POOL DECK PLAN
SP6.1-1	POOL DECK ELEVATION PLAN
SP6.2-1	POOL DECK DETAILS
SP6.3-1	POOL DECK DETAILS
WS1.0-1	GENERAL NOTES
WS1.1-1	SITE LAYOUT PLAN
WS1.2-1	SLIDE A SCHEDULE
WS1.3-1	FOUNDATION LAYOUT
WS1.4-1	FOUNDATION SCHEDULE AND DETAILS
WS1.5-1	FOUNDATION DETAILS
WS1.6-1	COLUMN DETAILS
WS1.7-1	COLUMN LAYOUT SCHEDULE
WS1.8-1	COLUMN DETAILS
WS1.9-1	COLUMN DETAILS
WS1.10-1	ARM SCHEDULE
WS1.11-1	SUPPORT ARM DETAILS
WS1.12-1	SUPPORT ARM DETAILS
WS1.13-1	SUPPORT ARM DETAILS
WS1.14-1	TYPICAL STAIR PLANS AND ELEVATIONS
WS1.15-1	TYPICAL STAIR SECTIONS AND DETAILS
WS1.16-1	STAIR PLAN
WS1.17-1	TOWER FRAMING & DETAILS
WS1.18-1	STAIR & RAILING DETAILS
WS1.19-1	STAIR & RAILING DETAILS
WS1.20-1	SLIDE ENTRY, EXIT & PART DETAILS
CONCESSIONS / WEIGHT ROOM BUILDING	
A2.10-2	BUILDING Q & R - FLOOR PLAN & DIMENSINO PLAN
A2.12-2	ENLARGED LOCKER ROOM AND RESTROOM PLAN
A8.00-2	ACCESSIBILITY DETAILS
M1.06-2	BUILDING Q & R - ENLARGED FLOOR PLAN
P1.05-2	BUILDING Q & R - WASTE & VENT FLOOR PLAN
P1.06-2	BUILDING Q & R - WATER & GAS FLOOR PLAN
E401-2	BUILDING "Q" POWER & SYSTEMS PLAN
E501-2	BUILDING "Q" LIGHTING PLAN

COUNTY OF FRESNO ENVIRONMENTAL HEALTH DIVISION
1221 Fulton Street – 3rd Floor (559) 600-3357
APPROVED
WITH NOTED CORRECTIONS AND
SUBJECT TO FIELD INSPECTIONS
BY: DATE 8/26/25
APPROVAL OF THIS PLAN DOES NOT CONSTITUTE PERMISSION TO VIOLATE
ANY APPLICABLE CITY OR COUNTY ORDINANCE, OR STATE LAW, AND SHALL
NOT PREVENT THIS DEPARTMENT FROM REQUIRING CORRECTION OF ERRORS
OR OMISSIONS IN PLANS, SPECIFICATIONS OR CONSTRUCTION.

AGD
ARCHITECTURE | DESIGN

ANDREW GOODWIN DESIGNS
1238 MONTEREY STREET
SAN LUIS OBISPO, CA 93422
t: (805) 439-1611
www.andrewgoodwin.us

These drawings are instruments of service and are the property of Andrew Goodwin Designs, Inc. The information represented on these drawings are exclusively for the project indicated and shall not be transferred or otherwise reproduced without express written permission of Andrew Goodwin. Copyright 2025

REVISIONS

REV #	REV DATE	REV DESCRIPTION

SEAL

LICENSED ARCHITECT
ANTONIO PAYNE
C-39
REN: 8/30/2025
STATE OF CALIFORNIA
NOT FOR CONSTRUCTION

PROJECT

TRANQUILLITY HIGH SCHOOL
AQUATIC CENTER MODERNIZATION
6052 Juanche Ave,
Tranquillity, CA 93668

CLIENT

GOLDEN PLAINS UNIFIED SCHOOL DISTRICT

SHEET TITLE

SHEET INDEX

PHASE DESCRIPTION
100% CD FCHD APPROVAL SWIMMING POOL

DATE: 8/26/2025

TECHNICIAN: RT / JL

PROJECT MANAGER: TP

JOB NUMBER: 791

SHEET NUMBER
G0.01-1

PLOT DATE: 4/30/2025 5:27:17 PM

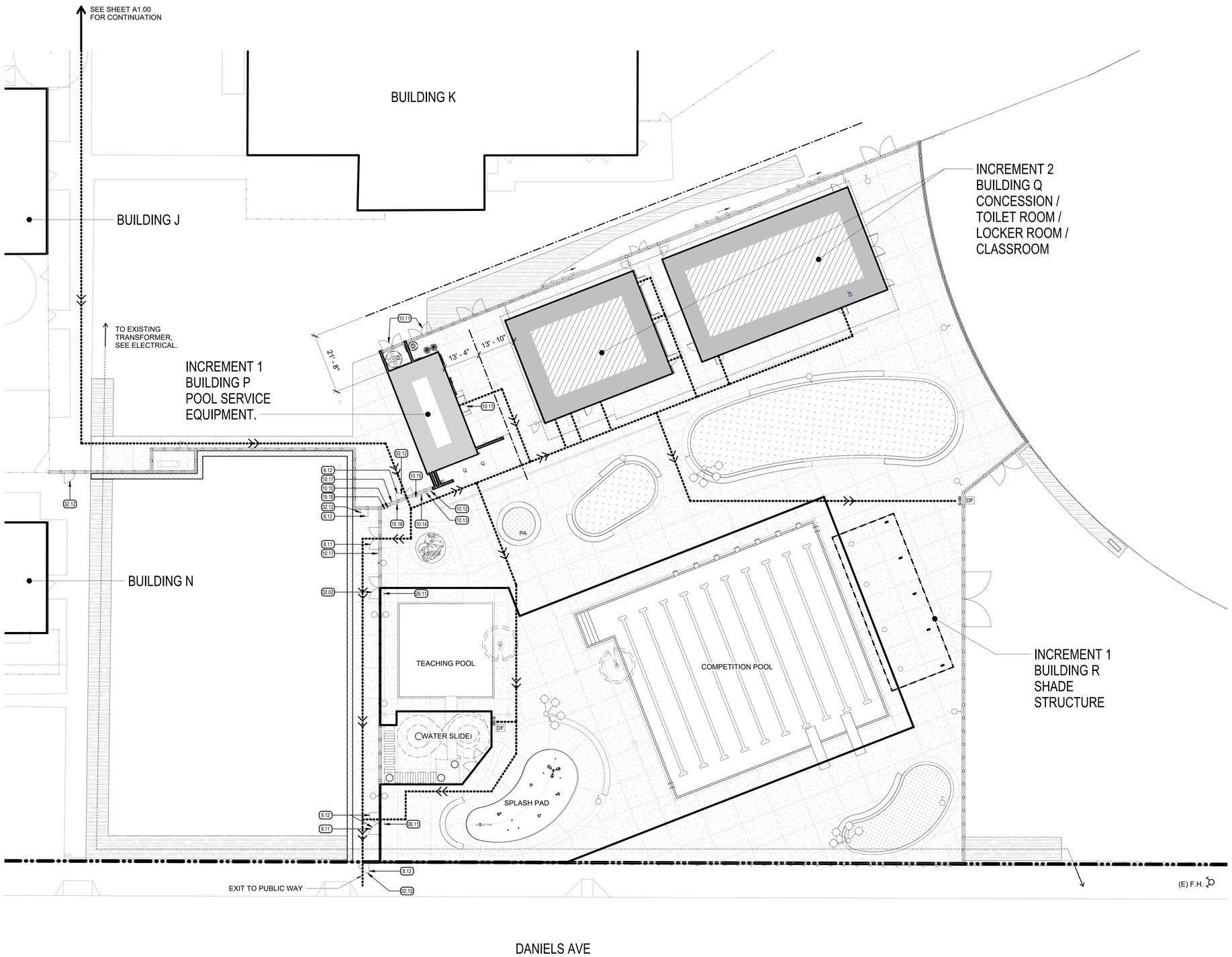

8.11	ACCESSIBLE CHAINLINK GATE, SEE CIVIL.
8.12	PROVIDE PANIC HARDWARE, SEE CIVIL.
10.10	POOL USER CAPACITY SIGNAGE. SEE AQUATICS.
10.11	CHEMICAL HAZARD SIGNAGE. SEE AQUATICS.
10.12	EMERGENCY TELEPHONE NUMBER. SEE AQUATICS.
10.13	ILLUSTRATED CPR DIAGRAM SIGNAGE. SEE AQUATICS.
10.14	NO LIFEGUARD WARNING SIGNAGE. SEE AQUATICS.
10.15	NO DIVING SIGNAGE. SEE AQUATICS.
10.16	KEEP CLOSED SIGNAGE. SEE AQUATICS.
10.17	DIARRHEA SIGNAGE. SEE AQUATICS.
10.18	FIRE DEPARTMENT SIGNAGE. SEE AQUATICS.
26.11	SELF-ILLUMINATING EXIT SIGN, SEE ELECTRICAL.
32.02	DOUBLE CHAIN LINK GATE, SEE CIVIL.
32.12	ACCESSIBLE CHAIN LINK GATE. SEE CIVIL.

KEYNOTES (xx.xx)

OCCUPANT LOAD FACTORS (TABLE 1004.5)

POOL	50 GROSS
POOL DECK	15 GROSS
STORAGE / EQUIPMENT / I.T, ELECT. ROOMS	300 GROSS
LOCKER ROOM	50 GROSS
OFFICE	150 GROSS

COMPETITION POOL

6,300 SF / 50 = 126 OCCUPANTS

TEACHING POOL

1,250 SF / 50 = 25 OCCUPANTS

SPLASH PAD

850 SF / 50 = 17 OCCUPANTS

POOL DECK

7,884 SF / 15 = 526 OCCUPANTS

BUILDING 'P' POOL SERVICE EQUIPMENT

800 SF / 300 = 3 OCCUPANTS

BUILDING 'Q' (INCREMENT 2)

LOCKER ROOM

MENS	=	225 SF / 50 OLF = 5 OCCUPANTS
WOMENS	=	224 SF / 50 OLF = 5 OCCUPANTS
I.T CLOSET RM. Q104	=	55 SF / 300 OLF = 1 OCCUPANT
DRY STORAGE	=	64 SF / 300 OLF = 1 OCCUPANT
JANITOR	=	66 SF / 300 OLF = 1 OCCUPANT
CONCESSION	=	338 SF / 150 OLF = 2 OCCUPANTS
CLASSROOM	=	2,370 SF / 50 = 48 OCCUPANTS
I.T CLOSET RM. Q112	=	31 SF / 300 OLF = 1 OCCUPANT
ELECTRICAL	=	32 SF / 300 OLF = 1 OCCUPANT
EQUIPMENT STORAGE	=	229 SF / 300 OLF = 1 OCCUPANT
OFFICE	=	111 SF / 150 = 1 OCCUPANTS

BUILDING 'R' SHADE STRUCTURE

OVERHANG = 1,448 SF/ 7 = 207 OCCUPANTS

TOTAL OCCUPANTS = 971 OCCUPANTS

SITE ANALYSIS

- PROPERTY LINE
- ASSUMED PROPERTY LINE
- ACCESSIBLE ROUTE (2022 C.B.C. SECTION 11B - 206)
- DF — ACCESSIBLE DRINKING FOUNTAIN THIS DSA APPLICATION NUMBER
- M — ACCESSIBLE MENS TOILET ROOM THIS DSA APPLICATION NUMBER
- W — ACCESSIBLE WOMENS TOILET ROOM THIS DSA APPLICATION NUMBER
- S — ACCESSIBLE GENDER NEUTRAL STAFF TOILET ROOM THIS DSA APPLICATION NUMBER
- ML — MENS LOCKER ROOM (DSA APPLICATION NUMBER INCREMENT 2)
- WL — WOMENS LOCKER ROOM (DSA APPLICATION NUMBER INCREMENT 2)

THE ACCESSIBLE ROUTE, AS DEFINED IN THE CALIFORNIA BUILDING CODE, IS A CONTINUOUS UNOBSTRUCTED PATH CONNECTING ACCESSIBLE ELEMENTS AND SPACES OF AN ACCESSIBLE SITE, BUILDING OR FACILITY THAT CAN BE NEGOTIATED BY A PERSON WITH A DISABILITY USING A WHEELCHAIR, AND THAT IS ALSO SAFE FOR AND USABLE BY PERSONS WITH OTHER DISABILITIES. INTERIOR ACCESSIBLE ROUTES MAY INCLUDE CORRIDORS, HALLWAYS, FLOORS, RAMPS, ELEVATORS, AND LIFTS. EXTERIOR ACCESSIBLE ROUTES MAY INCLUDE PARKING ACCESS AISLES, CURB RAMPS, CROSSWALKS AT VEHICULAR WAYS, WALKS, RAMPS AND LIFTS. INTERIOR AND EXTERIOR ACCESSIBLE ROUTES SHALL COMPLY WITH CBC CHAPTER 11B: ACCESSIBLE ROUTES. COMMON PATH OF TRAVEL ITEMS INCLUDE: DRINKING FOUNTAINS SERVING THE AREA OF ALTERATION, PUBLIC TELEPHONES SERVING THE AREA OF ALTERATION, EXTERIOR OR INTERIOR SIGNS ALONG THE PATH OF TRAVEL, ACCESSIBLE ROUTE COMPONENTS, WALKING SURFACES DIMENSIONS, RUNNING SLOPE OF WALKING SURFACE ARE NOT TO EXCEED 1:20 SLOPE, RUNNING SLOPE OF RAMPS ARE NOT TO EXCEED 1:12 SLOPE, CROSS SLOPE OF WALKS, RAMPS AND LANDINGS ARE NOT TO EXCEED 1:48, VERTICAL CHANGES IN LEVEL ARE NOT TO EXCEED 1/4", OPENING IN DRAINS AND GRATINGS ARE NOT TO EXCEED 1/2" IN PREDOMINANT DIRECTION OF TRAVEL, PROTRUDING OBJECTS AND OVERHEAD OBSTRUCTIONS ARE TO HAVE 80" MINIMUM HEAD CLEARANCE AND ARE NOT TO PROJECT MORE THAN 4" FROM WALLS WITHIN A 27" AND 80" RANGE, SITE ARRIVAL POINTS, PARKING LOTS, BUS STOPS, PASSENGER DROP-OFF AND LOADING ZONES.

DESIGN PROFESSIONAL IN CHARGE STATEMENT:

- THE P.O.T. IDENTIFIED IN THESE CONSTRUCTION DOCUMENTS MEETS THE REQUIREMENTS OF THE CURRENT APPLICABLE CALIFORNIA BUILDING CODE (CBC) ACCESSIBILITY PROVISIONS FOR PATH OF TRAVEL REQUIREMENTS FOR ALTERATIONS, ADDITIONS AND STRUCTURAL REPAIRS.
- AS PART OF THE DESIGN OF THIS PROJECT, THE P.O.T. WAS EXAMINED AND ANY ELEMENTS, COMPONENTS, OR PORTIONS OF THE P.O.T. THAT WERE DETERMINED TO BE NONCOMPLIANT WITH THE CBC HAVE BEEN IDENTIFIED AND THE CORRECTIVE WORK NECESSARY TO BRING THEM INTO COMPLIANCE HAS BEEN INCLUDED WITHIN THE SCOPE OF THIS PROJECT'S WORK THROUGH DETAILS, DRAWINGS, AND SPECIFICATIONS INCORPORATED INTO THESE CONSTRUCTION DOCUMENTS.
- ANY NONCOMPLIANT ELEMENTS, COMPONENTS OR PORTIONS OF THE P.O.T. THAT WILL NOT BE CORRECTED BY THIS PROJECT BASED ON VALUATION THRESHOLD LIMITATIONS OR A FINDING OF UNREASONABLE HARDSHIP ARE INDICATED IN THESE CONSTRUCTION DOCUMENTS.
- DURING CONSTRUCTION, IF P.O.T. ITEMS WITHIN THE SCOPE OF THE PROJECT REPRESENTED AS CBC COMPLIANT ARE FOUND TO BE NONCONFORMING BEYOND REASONABLE CONSTRUCTION TOLERANCES, THEY ITEMS SHALL BE BROUGHT INTO COMPLIANCE WITH THE CBC AS A PART OF THIS PROJECT BY MEANS OF A CONSTRUCTION CHANGE DOCUMENT.
- ITS ADVISABLE TO AVOID DESIGN REQUIREMENTS THAT ARE AT OR NEAR DIMENSIONAL THRESHOLDS. CONSTRUCTION TOLERANCES MAY BE USED WHEN EVALUATING THE COMPLIANCE OF EXISTING PATH OF TRAVEL ELEMENTS PER DSA IR 11B-8 'USE OF PREDETERMINED CONSTRUCTION TOLERANCE GUIDELINES FOR ACCESSIBILITY

LEGEND

A. SEE SHEET G0.02-1 FOR BUILDING 'S' CODE ANALYSIS

GENERAL NOTES

COUNTY OF FRESNO ENVIRONMENTAL HEALTH DIVISION
1221 Fulton Street - 3rd Floor (559) 600-3357
APPROVED
WITH NOTED CORRECTIONS AND
SUBJECT TO FIELD INSPECTIONS
BY: DATE: 8/26/25
APPROVAL OF THIS PLAN DOES NOT CONSTITUTE PERMISSION TO VIOLATE ANY APPLICABLE CITY OR COUNTY ORDINANCE, OR STATE LAW, AND SHALL NOT PREVENT THIS DEPARTMENT FROM REQUIRING CORRECTION OF ERRORS OR OMISSIONS IN PLANS, SPECIFICATIONS OR CONSTRUCTION.

1 **SITE CODE ANALYSIS**
1" = 15'-0"

AGD ARCHITECTURE | DESIGN
ANDREW GOODWIN DESIGNS
1238 MONTEREY STREET
SAN LUIS OBISPO, CA 93422
t: (805) 439-1611
www.andrewgoodwin.us

These drawings are instruments of service and are the property of Andrew Goodwin Designs, Inc. The information represented on these drawings are exclusively for the project indicated and shall not be transferred or otherwise reproduced without express written permission of Andrew Goodwin. Copyright 2025

REVISIONS

REV # | REV DATE | REV DESCRIPTION

SEAL

LICENSED ARCHITECT
ANTONIO PARSONS
REN: 6/30/2025
STATE OF CALIFORNIA
NOT FOR CONSTRUCTION

PROJECT

TRANQUILLITY HIGH SCHOOL
INCREMENT 1 AQUATIC CENTER MODERNIZATION
6052 Juanche Ave,
Tranquillity, CA 93668

CLIENT

GOLDEN PLAINS UNIFIED SCHOOL DISTRICT

SHEET TITLE

SITE CODE ANALYSIS

PHASE DESCRIPTION
100% CD FCHD APPROVAL
SWIMMING POOL

DATE: 8/26/2025

TECHNICIAN: RT / JL

PROJECT MANAGER: TP

JOB NUMBER: 791

SHEET NUMBER
G0.02-1

PLOT DATE: 8/13/2025 3:22:22 PM

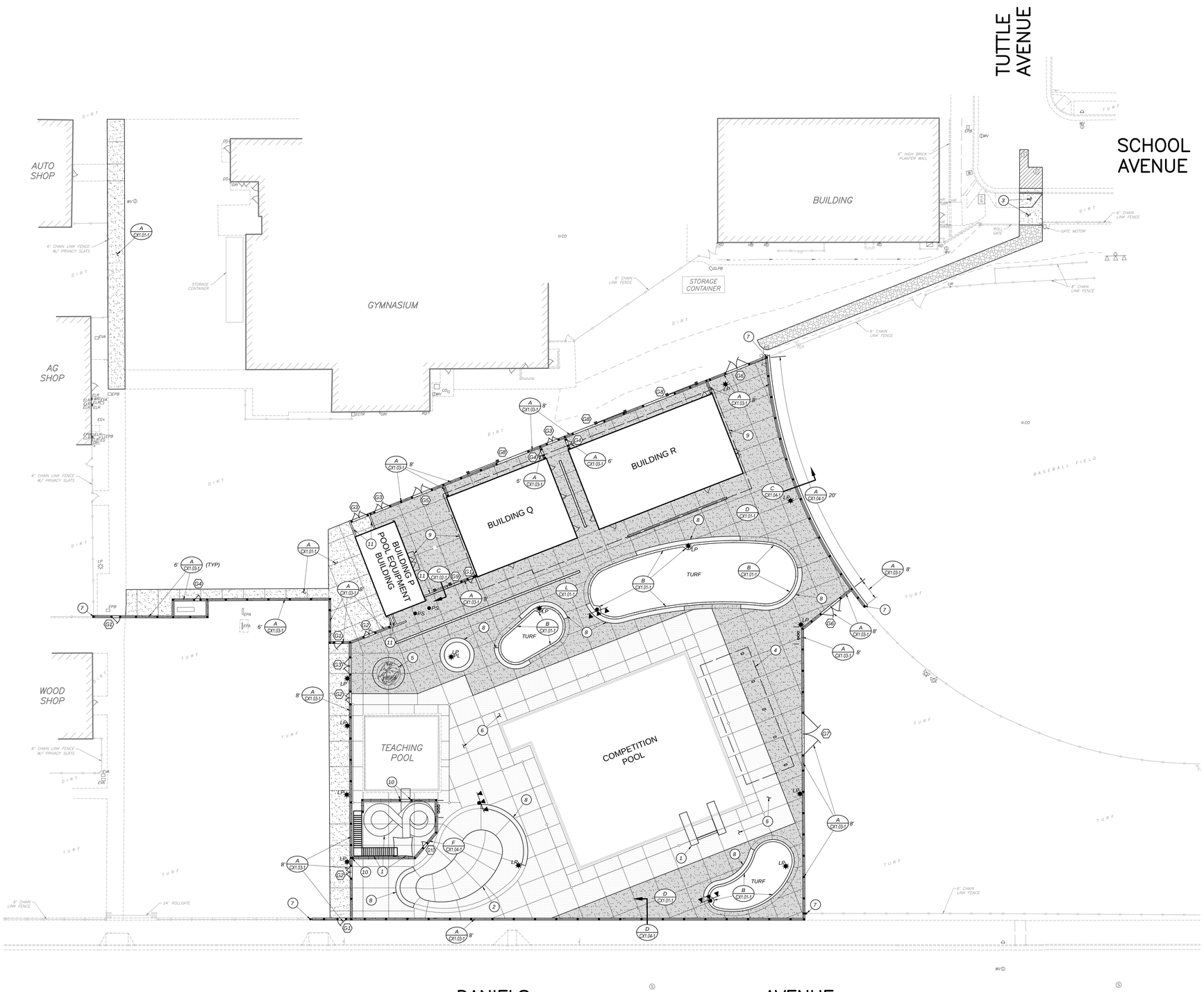

SITE LEGEND:

	LIMITS OF CONCRETE IMPROVEMENTS
	LIMITS OF CONCRETE IMPROVEMENTS BY OTHERS
	LIMITS OF HEAVY DUTY CONCRETE IMPROVEMENTS PER DETAIL [D/CX1.01-1]
	LIMITS OF HEAVY DUTY ASPHALTIC CONCRETE PAVEMENT IMPROVEMENTS PER LATEST COUNTY OF FRESNO STANDARDS AND SPECIFICATIONS
	LIMITS OF DECOMPOSED GRANITE IMPROVEMENTS PER DETAIL [K/CX1.01-1]
PL	PLANTER
LP	SITE LIGHTING, SEE ELECTRICAL PLANS
	POOL LIGHTING, SEE ELECTRICAL PLANS
	DRINKING FOUNTAIN PER DETAIL [A/CX1.02-1]
PS	DECK SHOWER, SEE ARCHITECTURAL AND PLUMBING PLANS
1	POOL EQUIPMENT, SEE ARCHITECTURAL AND AQUATICS PLANS
2	SPLASH PAD, SEE ARCHITECTURAL AND AQUATICS PLANS
3	CONCRETE SIDEWALK ,DRIVE APPROACH AND CURB AND GUTTER PER LATEST COUNTY OF FRESNO STANDARDS AND SPECIFICATIONS
4	SHADE STRUCTURE, SEE ARCHITECTURAL PLANS
5	DECORATIVE LOGO, SEE ARCHITECTURAL PLANS
6	POOL IMPROVEMENTS, SEE AQUATICS PLANS
7	CONNECT EXISTING CHAINLINK FENCE AND FABRIC TO NEW FENCE POST PER DETAIL [A/CX1.03-1]
8	CONCRETE SEAT WALL WITH ACCENT LIGHTING, SEE ARCHITECTURAL PLANS
9	BUILDING OVERHANG, SEE ARCHITECTURAL AND STRUCTURAL PLANS
10	DECORATIVE METAL FENCE WITH 4" MAX SEPARATION PER DETAIL [F/CX1.04-1]
11	CMU WALL PER STRUCTURAL PLANS

GENERAL SITE NOTES:

1. ALL CONCRETE MOWSTRIPS, RAMPS AND SIDEWALKS SHALL HAVE WEAKENED PLANE JOINTS AT 10 FEET MAXIMUM ON CENTER AND EXPANSION JOINTS AT 30 FEET MAXIMUM ON CENTER PER DETAIL [A/CX1.01-1]; FOR SCORE LINE LAYOUT WITHIN THE AQUATICS AREA, REFER TO ARCHITECTURAL PLANS. SCORE LINES WITHIN THE AQUATICS AREA SHALL HAVE WEAKENED PLANE JOINTS AT 15 FEET MAXIMUM ON CENTER.
2. INSTALL DOWELED CONNECTION AT JOINT OF NEW CONCRETE TO EXISTING CONCRETE PER DETAIL [C/CX1.01-1]
3. NO CONCRETE MAY BE POURED UNTIL THE FORMS HAVE BEEN REVIEWED AND APPROVED BY THE PROJECT INSPECTOR.
4. ALL BURIED METALLIC OBJECTS SHALL HAVE A PROTECTIVE COATING OR BE WRAPPED WITH APPROVED PROTECTIVE WRAP.
5. ADJUST EXISTING SPRINKLER HEADS AND LATERAL LINES AS REQUIRED BY NEW IMPROVEMENTS, OR AS SHOWN ON THE IRRIGATION PLANS.
6. 2 WORKING DAYS BEFORE COMMENCING EXCAVATION OPERATIONS WITHIN THE STREET RIGHT-OF-WAY AND/OR UTILITY EASEMENTS, ALL EXISTING UNDERGROUND FACILITIES SHALL HAVE BEEN LOCATED BY UNDERGROUND SERVICES ALERT (USA). CALL 1-800-642-2444
7. ANY SURVEY MONUMENTS WITHIN THE AREA OF CONSTRUCTION SHALL BE PRESERVED OR RESET BY A PERSON LICENSED TO PRACTICE LAND SURVEYING IN THE STATE OF CALIFORNIA. REPLACEMENT TO BE AT CONTRACTOR'S SOLE EXPENSE.
8. REPAIR ALL DAMAGED AND/OR OFF-GRADE CONCRETE STREET IMPROVEMENTS AS DETERMINED BY THE AGENCY HAVING JURISDICTION PRIOR TO OCCUPANCY
9. OBTAIN ALL REQUIRED PERMITS AND APPROVALS FROM AGENCY HAVING JURISDICTION FOR WORK WITHIN THE PUBLIC RIGHT OF WAY

GATE SCHEDULE:

GATE ID	REFERENCE DETAIL	GATE FUNCTION	ACCESS
G1	[A/CX1.03-1]	SINGLE LEAF CHAIN LINK PEDESTRIAN GATE	ADA/CBC ACCESSIBLE PANIC HARDWARE
G2	[A/CX1.03-1]	DOUBLE LEAF CHAIN LINK PEDESTRIAN GATE	ADA/CBC ACCESSIBLE PANIC HARDWARE
G3	[A/CX1.03-1]	DOUBLE LEAF CHAIN LINK MAINTENANCE GATE	LOCKABLE FORK LATCH
G4	[A/CX1.03-1]	SINGLE LEAF CHAIN LINK MAINTENANCE GATE	LOCKABLE FORK LATCH
G5	[A/CX1.03-1]	DOUBLE LEAF CHAIN LINK MAINTENANCE GATE	LOCKABLE FORK LATCH
G6	[A/CX1.03-1]	DOUBLE LEAF CHAIN LINK MAINTENANCE GATE	LOCKABLE FORK LATCH
G7	[A/CX1.03-1]	DOUBLE LEAF CHAIN LINK DRIVE GATE	LOCKABLE FORK LATCH
G8	[C/CX1.03-1]	CHAIN LINK MAINTENANCE ROLL GATE	LOCKABLE FORK LATCH
G9	[C/CX1.02-1]	CHAIN LINK MAINTENANCE ROLL GATE	LOCKABLE FORK LATCH
G10	[F/CX1.04-1]	SINGLE LEAF DECORATIVE METAL GATE	LOCKABLE FORK LATCH

COUNTY OF FRESNO ENVIRONMENTAL HEALTH DIVISION
1221 Fulton Street – 3rd Floor (559) 600-3357
APPROVED WITH NOTED CORRECTIONS AND SUBJECT TO FIELD INSPECTIONS
BY: DATE: 8/26/25
APPROVAL OF THIS PLAN DOES NOT CONSTITUTE PERMISSION TO VIOLATE ANY APPLICABLE CITY OR COUNTY ORDINANCE, OR STATE LAW AND SHALL NOT PREVENT THIS DEPARTMENT FROM REQUIRING CORRECTION OF ERRORS OR OMISSIONS IN PLANS, SPECIFICATIONS OR CONSTRUCTION.

SCALE: N 1"=20'

0 5 20 40
SCALE IN FEET

811 Know what's below. Call before you dig.

ANDREW GOODWIN DESIGNS
1238 MONTEREY STREET
SAN LUIS OBISPO, CA 93422
t: (805) 439-1611
www.andrewgoodwin.us

These drawings are instruments of service and are the property of Andrew Goodwin Designs, Inc. The information represented on these drawings are exclusively for the project indicated and shall not be transferred or otherwise reproduced without express written permission of Andrew Goodwin.
Copyright 2023

REVISIONS

REV #	REV DATE	REV DESCRIPTION

SEAL

NOT FOR CONSTRUCTION
08/01/2025
Date Signed:

PROJECT

TRANQUILLITY HIGH SCHOOL
AQUATIC CENTER MODERNIZATION
6052 Juanche Ave,
Tranquillity, CA 93668

CLIENT

GOLDEN PLAINS UNIFIED SCHOOL DISTRICT

SHEET TITLE

SITE PLAN

PHASE DESCRIPTION
100% CD FCHD APPROVAL
SWIMMING POOL

DATE: 8/26/2025

TECHNICIAN: SD

PROJECT MANAGER: LB

JOB NUMBER: 791

SHEET NUMBER
C3.01-1

Drawing: U:\2024\24-127\Sheet\Production\Drawings\24127_SI01.dwg, C3D 21-1 , BCF.ctb
Plot by: Joe Aug 05, 2025 - 3:06pm

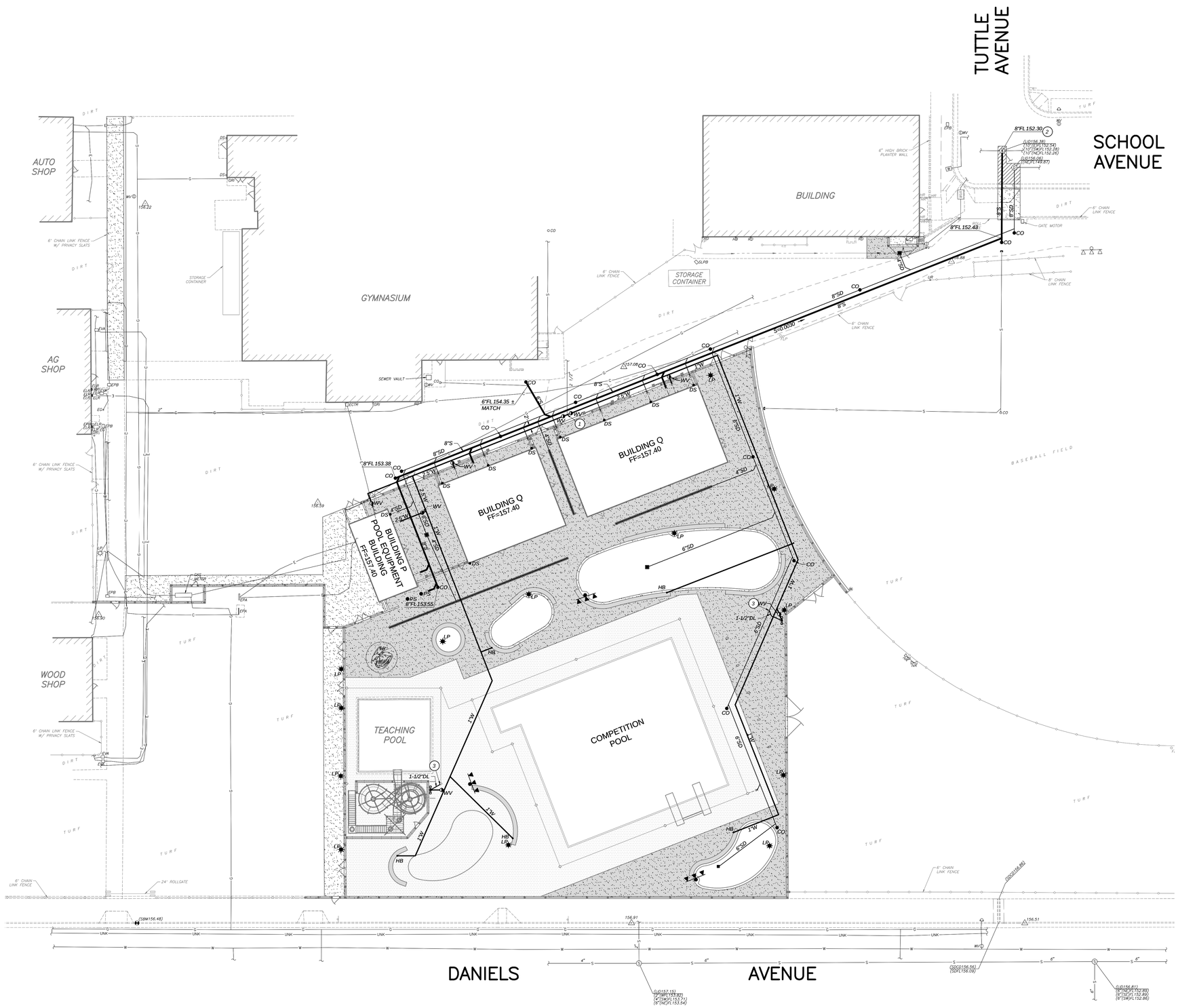

UTILITY LEGEND:

4"S	SEWER MAIN, SIZE AS NOTED ON PLANS. PIPE BEDDING AND BACKFILL PER DETAIL [G/CX1.01-1]
1"W	WATER MAIN, SIZE AS NOTED ON PLANS, MIN. 30" COVER. PIPE BEDDING AND BACKFILL PER DETAIL [G/CX1.01-1]
SD	STORM DRAIN PIPE, SEE GRADING PLAN
DL	DRAIN LINE, SIZE AS NOTED
FF	FINISHED FLOOR
FL	FLOWLINE
	DRINKING FOUNTAIN PER DETAIL [A/CX1.02-1]
HB	HOSE BIBB, SEE AQUATICS PLANS
PS	OUTDOOR COLUMN SHOWER, SEE ARCHITECTURAL PLANS; FOR SHOWER DRAIN LINE, SEE PLUMBING PLANS
WV	WATER VALVE PER [B/CX1.02-1]
CO	SEWER CLEANOUT PER DETAIL [H/CX1.01-1]
	CAP END OF UTILITY LINE
	POINT OF CONNECTION TO EXISTING OR PROPOSED UTILITY, COORDINATE WITH PLUMBING PLANS PRIOR TO CONNECTION.
S=0.0020	FLOWLINE SLOPE AND DIRECTION OF FLOW
1	CONNECT TO EXISTING WATER LINE WITH WATER-TIGHT CONNECTION. VERIFY SIZE, DEPTH, AND LOCATION.
2	CONNECT TO EXISTING SEWER LINE WITH WATER-TIGHT CONNECTION. VERIFY SIZE, DEPTH, AND LOCATION.
3	CONNECT DRINKING FOUNTAIN DRAIN LINE TO STORM DRAIN UTILITY WITH WATER-TIGHT CONNECTION.

GENERAL SITE UTILITY NOTES:

1. AS FIRST ORDER OF WORK, CONTRACTOR SHALL POTHOLE EXISTING UTILITIES AND NOTIFY ENGINEER IMMEDIATELY OF LOCATIONS, SIZE AND DEPTH.
2. THE CONTRACTOR SHALL FIELD VERIFY THE EXACT LOCATION, SIZE, DEPTH, AND TYPE OF ALL EXISTING UTILITIES AND INTERFERENCES SITUATED ALONG THE ROUTE OF THE PROPOSED CONSTRUCTION PRIOR TO COMMENCEMENT OF EXCAVATION, FABRICATION, AND INSTALLATION. THE CONTRACTOR SHALL CONSTRUCT ALL IMPROVEMENTS IN SUCH A MANNER AS WILL PROTECT ALL EXISTING UNDERGROUND UTILITIES AND, IN THE EVENT OF ANY CONFLICTS, SHALL NOTIFY THE ENGINEER BEFORE PROCEEDING.
3. SEE IRRIGATION PLANS FOR PROPOSED IRRIGATION PIPE ALIGNMENT.
4. COORDINATE EXACT POINTS OF CONNECTION TO BUILDING PLUMBING AND NOTIFY THE ENGINEER OF ANY CONFLICT SO THAT ADJUSTMENTS CAN BE MADE IF NEEDED.
5. SAWCUT EXISTING CONCRETE IMPROVEMENTS AS NECESSARY TO INSTALL NEW WATER OR SEWER IMPROVEMENTS. CONSTRUCT NEW CONCRETE IMPROVEMENTS TO MATCH ADJACENT CONCRETE IMPROVEMENTS AND JOIN TOGETHER WITH DOWEL BARS PER DETAIL [C/CX1.01-1]
6. INSTALLATION, TYPE, AND MANUFACTURER'S MODELS OF DOMESTIC WATER METERS, DRAIN INLETS/OUTLETS AND OTHER APPURTENANCES OF SITE UTILITY SYSTEMS SHALL BE DONE IN STRICT ACCORDANCE WITH GOVERNING AUTHORITY REQUIREMENTS.
7. LAYOUT OF MATERIALS, EQUIPMENT AND SYSTEMS IS GENERALLY DIAGRAMMATIC UNLESS SPECIFICALLY DIMENSIONED. SOME WORK MAY BE SHOWN OFFSET FOR CLARITY. THE ACTUAL LOCATIONS OF ALL MATERIALS, PIPING, FIXTURES, EQUIPMENT, SUPPORTS, ETC., SHALL BE CAREFULLY PLANNED PRIOR TO INSTALLATION OF ANY WORK TO AVOID ALL INTERFERENCES WITH EACH OTHER OR WITH STRUCTURAL, ELECTRICAL, PLUMBING AND MECHANICAL, ARCHITECTURAL OR ANY OTHER ELEMENTS. ALL CONFLICTS SHALL BE CALLED TO THE ATTENTION OF THE ARCHITECT AND THE ENGINEER PRIOR TO THE INSTALLATION OF ANY WORK OR THE ORDERING OF ANY EQUIPMENT.
8. ANY INSPECTION TO BE MADE BY THE AUTHORITY HAVING JURISDICTION SHALL REQUIRE A MINIMUM OF 24 HOUR NOTICE.
9. PURITY TESTS ARE REQUIRED ON ALL WATER SYSTEM INSTALLATIONS. CONTRACTOR TO COORDINATE WITH THE AUTHORITY HAVING JURISDICTION.
10. IF THE TOP OF THE STEM OF ANY WATER GATE VALVE IS DEEPER THAN 4' BELOW FINISHED PAVEMENT GRADE, THE CONTRACTOR SHALL INSTALL A STEM EXTENSION SO THAT THE TOP OF THE STEM, WITH EXTENSION, SHALL BE NO DEEPER THAN 4' NOR SHALLOWER THAN 2' FROM FINISHED GRADE.
11. BACKFILL UTILITY TRENCHES PER DETAIL [G/CX1.01-1]
12. ADJUST EXISTING UTILITY LIDS TO FINISHED GRADE PER UTILITY COMPANY STANDARDS AND DETAIL [F/CX1.01-1] AND INSTALL TRAFFIC RATED LIDS WHERE LOCATED IN A TRAFFIC AREA.

COUNTY OF FRESNO GENERAL CONSTRUCTION NOTES

1. AN ENCROACHMENT PERMIT IS REQUIRED FOR ANY WORK TO BE PERFORMED IN THE COUNTY OF FRESNO ROAD RIGHTS-OF-WAY. CONTACT THE COUNTY PERMIT ENGINEER AT (559) 600-4240 TO OBTAIN THE PERMIT. IF AN ENCROACHMENT PERMIT HAS NOT BEEN OBTAINED WITHIN 12 MONTHS OF THE APPROVAL DATE OF THESE PLANS, ADDITIONAL REVIEW AND REVISIONS TO THE PLANS MAY BE REQUIRED BEFORE THE PERMIT IS ISSUED.
2. ALL CONTRACTORS ARE REQUIRED TO HAVE A $6000.00 PERFORMANCE BOND ON FILE WITH THE COUNTY OF FRESNO'S MAINTENANCE & OPERATIONS DIVISION PRIOR TO OBTAINING AN ENCROACHMENT PERMIT.
3. NO COUNTY OF FRESNO PUBLIC ROAD SHALL BE CLOSED WITHOUT PRIOR APPROVAL FROM THE COUNTY OF FRESNO'S MAINTENANCE ENGINEER.
4. NO STORAGE OF EQUIPMENT OR MATERIALS WILL BE ALLOWED IN THE PUBLIC RIGHT-OF-WAY.
5. NO OPEN EXCAVATION ALLOWED AFTER WORKING HOURS. ALL EXCAVATION AREAS TO BE PROPERLY SECURED WHEN WORK CREWS ARE AWAY FROM SITE, ALL EXCAVATIONS IN ROAD AND SHOULDER AREA TO BE STEEL PLATED.
6. DIRT OR DEBRIS TRACKED ONTO EXISTING COUNTY ROADS FROM THIS PROJECT SHALL BE CLEANED OFF AT THE END OF EACH WORKING DAY TO THE SATISFACTION OF THE COUNTY INSPECTOR.
7. ACCESS TO ALL PROPERTIES SHALL BE PROVIDED AND MAINTAINED AT ALL TIMES, UNLESS ARRANGEMENTS, IN WRITING ARE MADE WITH THE PROPERTY OWNERS TO DEVIATE FROM THIS REQUIREMENT.
8. RESTORE ALL EXISTING DRAINAGE PATTERNS AND FACILITIES TO PRECONSTRUCTION CONDITIONS OR BETTER
9. ALL SIGNING, DETOURING AND BARRICADING SHALL CONFORM TO THE LATEST EDITION OF THE CALIFORNIA MANUAL ON UNIFORM TRAFFIC CONTROL DEVICES AND THE ACCEPTED TRAFFIC CONTROL PLAN.
10. PURSUANT TO SECTIONS 8771(b) AND 877(C) OF THE GOVERNMENT CODE, ANY MONUMENTS THAT CONTROL THE LOCATIONS OF BOUNDARIES OR OTHERWISE PROVIDE HORIZONTAL OR VERTICAL SURVEY CONTROL WITHIN THE CONSTRUCTION AREA, SHALL BE LOCATED AND REFERENCED PRIOR TO CONSTRUCTION, AND A CORNER RECORD OR RECORD OF SURVEY OF THE REFERENCES SHALL BE FILLED WITH THE COUNTY SURVEYOR.
11. CONTRACTOR SHALL SUBMIT TRAFFIC CONTROL PLAN FOR APPROVAL BY THE COUNTY OF FRESNO PRIOR TO ANY CONSTRUCTION IN PUBLIC RIGHT-OF-WAY.

COUNTY OF FRESNO ENVIRONMENTAL HEALTH DIVISION
1221 Fulton Street – 3rd Floor (559) 600-3357
APPROVED WITH NOTED CORRECTIONS AND SUBJECT TO FIELD INSPECTIONS
BY: _____ DATE: 8/26/25
APPROVAL OF THIS PLAN DOES NOT CONSTITUTE PERMISSION TO VIOLATE ANY APPLICABLE CITY OR COUNTY ORDINANCE, OR STATE LAW, AND SHALL NOT PREVENT THIS DEPARTMENT FROM REQUIRING CORRECTION OF ERRORS OR OMISSIONS IN PLANS, SPECIFICATIONS OR CONSTRUCTION.

SCALE: N 1"=20'
0 5 20 40
SCALE IN FEET

811 Know what's below. Call before you dig.

Blair, Church & Flynn
CONSULTING ENGINEERS
451 Clovis Avenue, Suite 200
Clovis, California 93612
Tel (559) 326-1400
Fax (559) 326-1500

AGD ARCHITECTURE | DESIGN
ANDREW GOODWIN DESIGNS
1238 MONTEREY STREET
SAN LUIS OBISPO, CA 93422
t: (805) 439-1611
www.andrewgoodwin.us

These drawings are instruments of service and are the property of Andrew Goodwin Designs, Inc. The information represented on these drawings are exclusively for the project indicated and shall not be transferred or otherwise reproduced without express written permission of Andrew Goodwin.
Copyright 2023

REVISIONS

REV #	REV DATE	REV DESCRIPTION

SEAL

NOT FOR CONSTRUCTION
8/6/2025
Date Signed:

PROJECT

TRANQUILLITY HIGH SCHOOL
AQUATIC CENTER MODERNIZATION
6052 Juanche Ave,
Tranquillity, CA 93668

CLIENT

GOLDEN PLAINS UNIFIED SCHOOL DISTRICT

SHEET TITLE

UTILITY PLAN

PHASE DESCRIPTION
100% CD FCHD APPROVAL
SWIMMING POOL

DATE: 8/26/2025
TECHNICIAN: SD
PROJECT MANAGER: LB
JOB NUMBER: 791

SHEET NUMBER
C6.01-1

Drawing: P:\24\24-237\Drafting\Production\Drawings\24237_UTIL1.dwg, C6.01-1 - BDF.dtb
Pen file: Gold - Aug 07, 2025 - 4:00pm

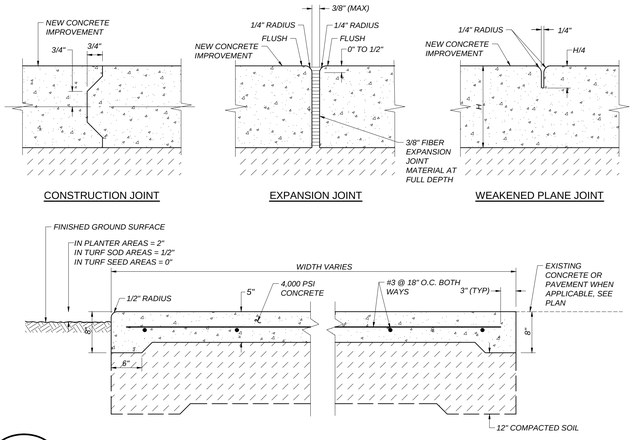

A CX1.01-1 REGULAR-DUTY CONCRETE
NOT TO SCALE

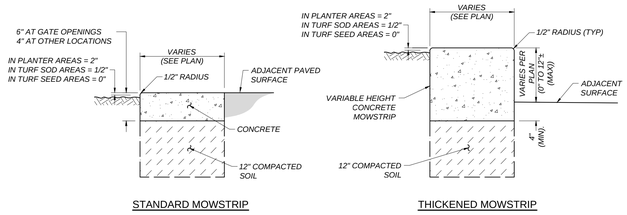

B CX1.01-1 CONCRETE MOWSTRIP
NOT TO SCALE

NOTES:

1. DRILL HOLE 1/8" LARGER THAN DOWEL DIAMETER.
2. CLEAN HOLE THOROUGHLY OF DUST AND FRAGMENTS WITH WATER, WIRE BRUSH, AND AIR.
3. INSTALL DOWELS IN SIMPSON SET-3G EPOXY. INSTALL IN CONFORMANCE WITH ICC ESR-4057.
4. WHERE SMOOTH DOWEL IS USED, APPLY BOND BREAKER TO SIDE IN NEW CONCRETE AS REQUIRED TO ALLOW HORIZONTAL MOVEMENT OF CONCRETE.
5. WHERE DEFORMED REBAR DOWEL IS USED, PROVIDE APPROVED WRAP ON SIDE IN NEW CONCRETE AS REQUIRED TO ALLOW HORIZONTAL MOVEMENT OF CONCRETE.

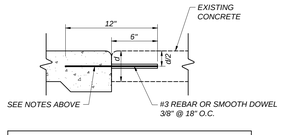

NOTE: BARS INSTALLED IN EPOXY IN SITE FLATWORK MAY BE EXEMPT FROM SPECIAL INSPECTION PER DSA 103

C CX1.01-1 DOWEL BAR
NOT TO SCALE

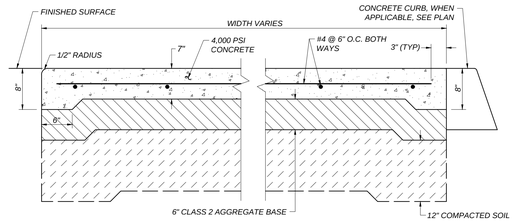

D CX1.01-1 HEAVY DUTY CONCRETE PAVEMENT STRUCTURAL SECTION
NOT TO SCALE

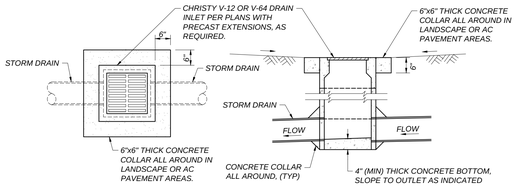

E CX1.01-1 V-12 DRAIN INLET WITH CONCRETE COLLAR
NOT TO SCALE

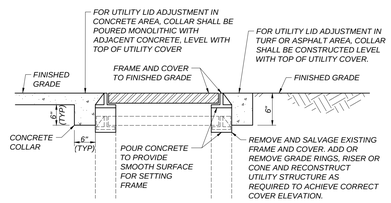

F CX1.01-1 ADJUST UTILITY LID
NOT TO SCALE

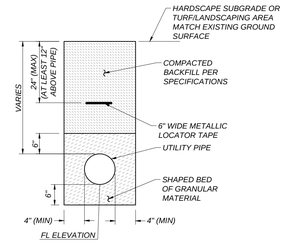

G CX1.01-1 TRENCH DETAIL FOR UTILITY LINES
NOT TO SCALE

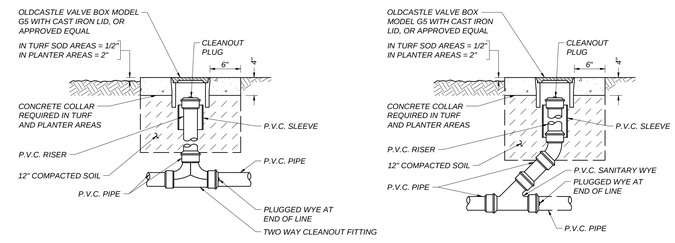

NOTES:

1. USE ONE-WAY CLEANOUTS AT ALL ANGLE POINTS
2. TWO-WAY CLEANOUTS AT ALL OTHER LOCATIONS
3. 6" THICK CONCRETE COLLAR IN VEHICULAR TRAFFIC AREAS

H CX1.01-1 SURFACE CLEANOUT
NOT TO SCALE

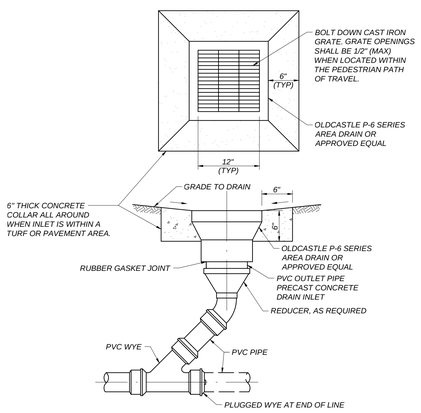

I CX1.01-1 P-6 SERIES AREA DRAIN
NOT TO SCALE

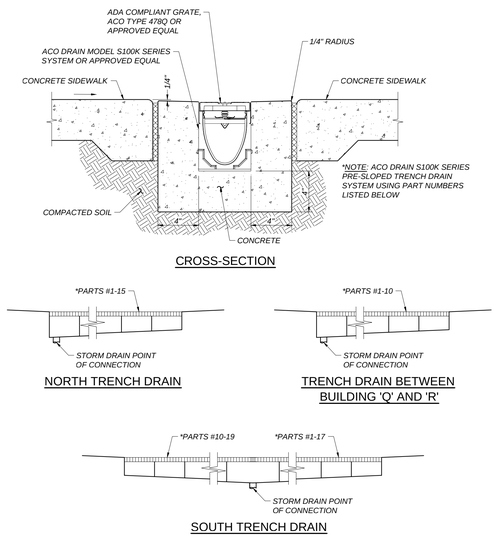

J CX1.01-1 TYPICAL PRE-SLOPED DRAIN
NOT TO SCALE

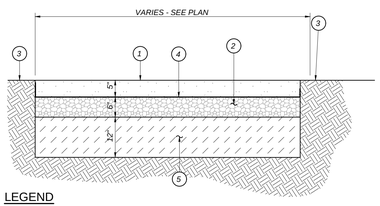

LEGEND

1. STABILIZED DECOMPOSED GRANITE SURFACE. SEE SPECIFICATIONS FOR MATERIALS AND METHODS. CONTRACTOR TO SUBMIT SAMPLE FOR APPROVAL.
2. 3/4" (MAX) TYPE 2 AGGREGATE BASE, COMPACTED TO 95%.
3. ADJACENT DECOMPOSED GRANITE SURFACING OR FINISHED GRADE.
4. NON-WOVEN GEOTEXTILE FABRIC, MINIMUM 4.0 OZ/SY. WRAP UP 1.5" HIGH ON ALL SIDES OF HEADER.
5. SUBGRADE. SCARIFY TO A DEPTH OF 12" MOISTURE CONDITION AND RECOMPACT TO 95% RELATIVE DENSITY.

K CX1.01-1 STABILIZED DECOMPOSED GRANITE SURFACE
NOT TO SCALE

COUNTY OF FRESNO ENVIRONMENTAL HEALTH DIVISION
1221 Fulton Street – 3rd Floor (559) 600-3357
APPROVED WITH NOTED CORRECTIONS AND SUBJECT TO FIELD INSPECTIONS
BY: DATE: 8/26/25
APPROVAL BY THE DEPARTMENT DOES NOT CONSTITUTE PERMISSION TO VIOLATE ANY APPLICABLE CITY OR COUNTY ORDINANCE, OR STATE LAWS AND SHALL NOT PREVENT THIS DEPARTMENT FROM REQUIRING CORRECTION OF ERRORS OR OMISSIONS IN PLANS, SPECIFICATIONS OR CONSTRUCTION.

Blair, Church & Flynn
CONSULTING ENGINEERS
451 Clovis Avenue, Suite 200
Clovis, California 93612
Tel (559) 326-1400
Fax (559) 326-1500

AGD ARCHITECTURE | DESIGN
ANDREW GOODWIN DESIGNS
1238 MONTEREY STREET
SAN LUIS OBISPO, CA 93422
t: (805) 439-1611
www.andrewgoodwin.us

These drawings are instruments of service and are the property of Andrew Goodwin Designs, Inc. The information represented on these drawings are exclusively for the project indicated and shall not be transferred or otherwise reproduced without express written permission of Andrew Goodwin.
Copyright 2023

REVISIONS

REV #	REV DATE	REV DESCRIPTION

SEAL

NOT FOR CONSTRUCTION
08/01/2025
Date Signed:

PROJECT

TRANQUILLITY HIGH SCHOOL
AQUATIC CENTER MODERNIZATION
6052 Juanche Ave,
Tranquillity, CA 93668

CLIENT

GOLDEN PLAINS UNIFIED SCHOOL DISTRICT

SHEET TITLE

DETAILS

PHASE DESCRIPTION
100% CD FCHD APPROVAL
SWIMMING POOL

DATE: 8/26/2025
TECHNICIAN: SD
PROJECT MANAGER: LB
JOB NUMBER: 791

SHEET NUMBER
CX1.01-1

Drawing: U:\2024\24-037\Site\Production\Drawings\24037-SITE.dwg, CX1.01-1 - ROF.dlt
Plot by: sue Aug 01, 2025 - 1:05pm

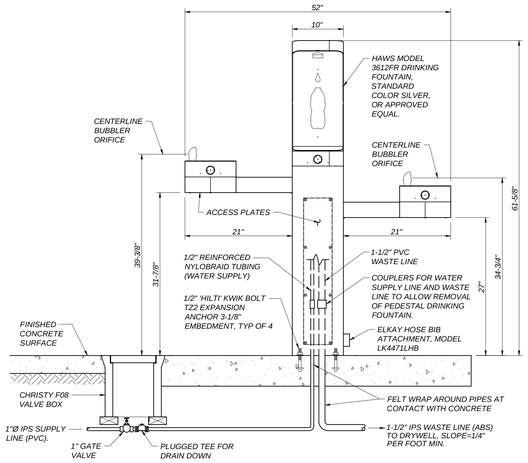

SIDE VIEW

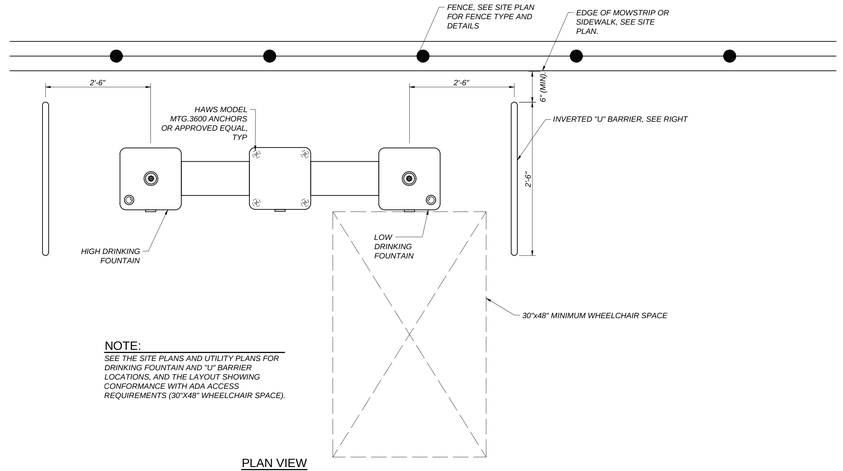

NOTE:
SEE THE SITE PLANS AND UTILITY PLANS FOR DRINKING FOUNTAIN AND "U" BARRIER LOCATIONS, AND THE LAYOUT SHOWING CONFORMANCE WITH ADA ACCESS REQUIREMENTS (30"X48" WHEELCHAIR SPACE).

PLAN VIEW

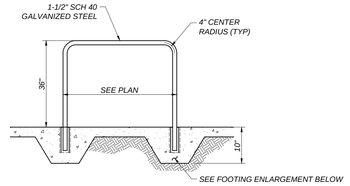

"U" BARRIER ELEVATION VIEW
NOT TO SCALE

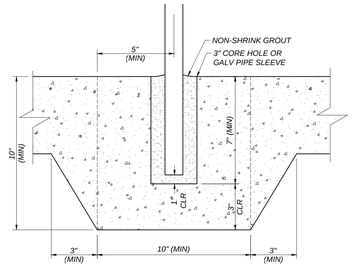

"U" BARRIER FOOTING ENLARGEMENT
NOT TO SCALE

A CX1.02-1 DRINKING FOUNTAIN
NOT TO SCALE

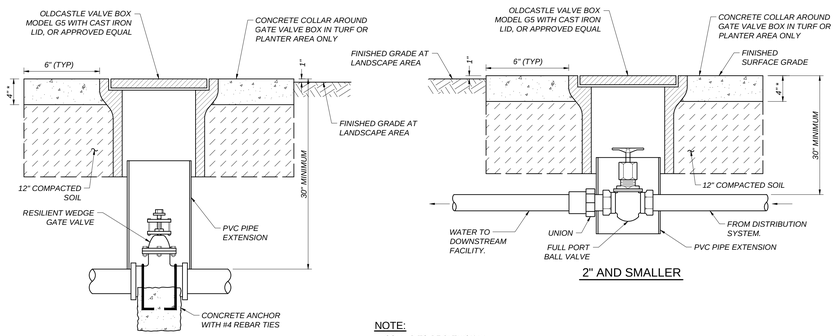

2-1/2" AND LARGER

2" AND SMALLER

NOTE:
* COLLAR TO BE 6" THICK IN VEHICULAR TRAFFIC AREAS

B CX1.02-1 GATE VALVE AND LID
NOT TO SCALE

FENCE AND ROLL GATE ITEMS:

1. 2-7/8" O.D. GALVANIZED STEEL POST (5.79 lbs/ft)
2. 2-3/8" O.D. GALVANIZED STEEL LINE POST (3.65 lbs/ft)
3. 2" O.D. GALVANIZED STEEL GATE FRAME (2.72 lbs/ft)
4. 1-5/8" O.D. GALVANIZED STEEL HORIZONTAL RAIL (2.27 lbs/ft)
5. 2" X 2" MESH X 9 GAUGE GALVANIZED FENCE FABRIC WITH KNUCKLED TOP AND BOTTOM SELVAGE. GALVANIZE BEFORE WEAVING, (GBW)
6. 1/4" X 3/4" GALVANIZED STEEL STRETCHER BAR
7. 9 GAUGE (0.148" DIA.) GALVANIZED STEEL TIE WIRES OR HOG RINGS AT 15" MAXIMUM SPACING
8. 9 GAUGE (0.192" DIA.) GALVANIZED STEEL POST CLIPS AT 14" MAXIMUM SPACING
9. 6" TURNBUCKLE ADJUSTERS FOR 3/8" DIA. TRUSS RODS
10. 3/8" DIA. GALVANIZED STEEL ADJUSTABLE TRUSS RODS

NOTES ON FENCING AND GATES:

1. DOUBLE TRUSS RODS ARE REQUIRED IN PANEL ADJACENT TO OPENING, GATE POSTS, AT ALL FENCE CORNERS AND IN ALL GATE PANELS.
2. CONTRACTOR TO PROVIDE AND INSTALL GATE HOLDBACK FOR EACH GATE. HOLDBACK TO BE INSTALLED IN FENCE MOWSTRIP UNLESS OTHERWISE NOTED.
3. MOWSTRIP AT DRIVE GATE OPENING SHALL BE 5-1/2" THICK.
4. USE FITTINGS FOR ALL GATE JOINTS AND TRUSS ROD CONNECTIONS. NO WELDING PERMITTED.
5. LENGTH OF ROLL GATE SHALL MATCH THE GATE OPENING SHOWN ON THE SITE PLAN

NOTE:
ROLL GATE ORIENTATION SHOWN IN THE DETAIL BELOW MAY NOT APPLY TO THE GATE INSTALLATION SHOWN ON THE SITE PLAN. SEE SITE PLAN FOR ROLL GATE ORIENTATION AND OPENING DIRECTION

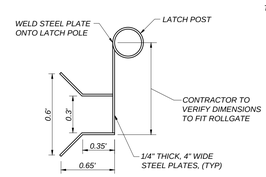

LATCH
NOT TO SCALE

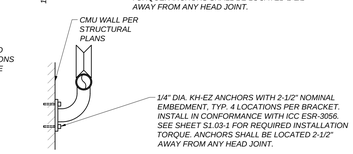

PIPE TRACK BRACKET
NOT TO SCALE

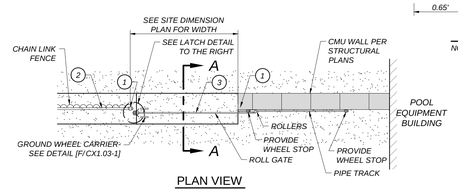

PLAN VIEW

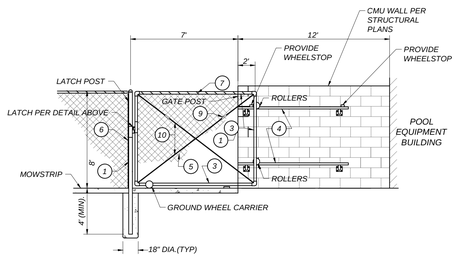

FRONT VIEW

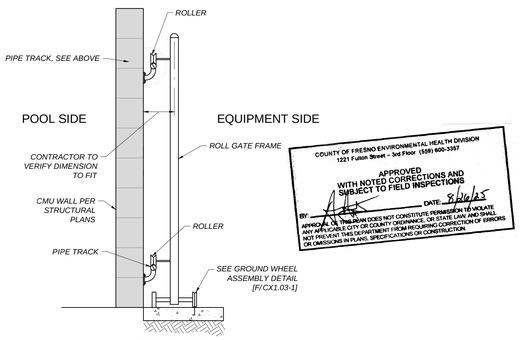

A-A SIDE VIEW

COUNTY OF FRESNO ENVIRONMENTAL HEALTH DIVISION
1221 Fulton Street – 3rd Floor (559) 600-3357
APPROVED WITH NOTED CORRECTIONS AND SUBJECT TO FIELD INSPECTIONS
BY: DATE: 8/26/25
APPROVAL OF THIS PLAN DOES NOT CONSTITUTE PERMISSION TO VIOLATE ANY APPLICABLE CITY OR COUNTY ORDINANCE, OR STATE LAW, AND SHALL NOT PREVENT THIS DEPARTMENT FROM REQUIRING CORRECTION OF ERRORS OR OMISSIONS IN PLANS, SPECIFICATIONS OR CONSTRUCTION.

C CX1.02-1 ROLL GATE AT CMU WALL INSTALLATION
NOT TO SCALE

Blair, Church & Flynn
CONSULTING ENGINEERS
451 Clovis Avenue, Suite 200
Clovis, California 93612
Tel (559) 326-5400
Fax (559) 326-1600

AGD ARCHITECTURE | DESIGN

ANDREW GOODWIN DESIGNS
1238 MONTEREY STREET
SAN LUIS OBISPO, CA 93422
t: (805) 439-1611
www.andrewgoodwin.us

These drawings are instruments of service and are the property of Andrew Goodwin Designs, Inc. The information represented on these drawings are exclusively for the project indicated and shall not be transferred or otherwise reproduced without express written permission of Andrew Goodwin.
Copyright 2023

REVISIONS
REV # | REV DATE | REV DESCRIPTION

SEAL
NOT FOR CONSTRUCTION
08/01/2025
Date Signed:

PROJECT
TRANQUILLITY HIGH SCHOOL
AQUATIC CENTER MODERNIZATION
6052 Juanche Ave,
Tranquillity, CA 93668

CLIENT
GOLDEN PLAINS UNIFIED SCHOOL DISTRICT

SHEET TITLE
DETAILS

PHASE DESCRIPTION
100% CD FCHD APPROVAL
SWIMMING POOL

DATE: 8/26/2025
TECHNICIAN: SD
PROJECT MANAGER: LB
JOB NUMBER: 791
SHEET NUMBER
CX1.02-1

Drawing: U:\CAD\24-0237\Site\Production\Drawings\24237-DTIS.dwg- CX1.02-1 - MCF.ctb
Plot By: gurr Aug 01, 2025 - 3:32pm

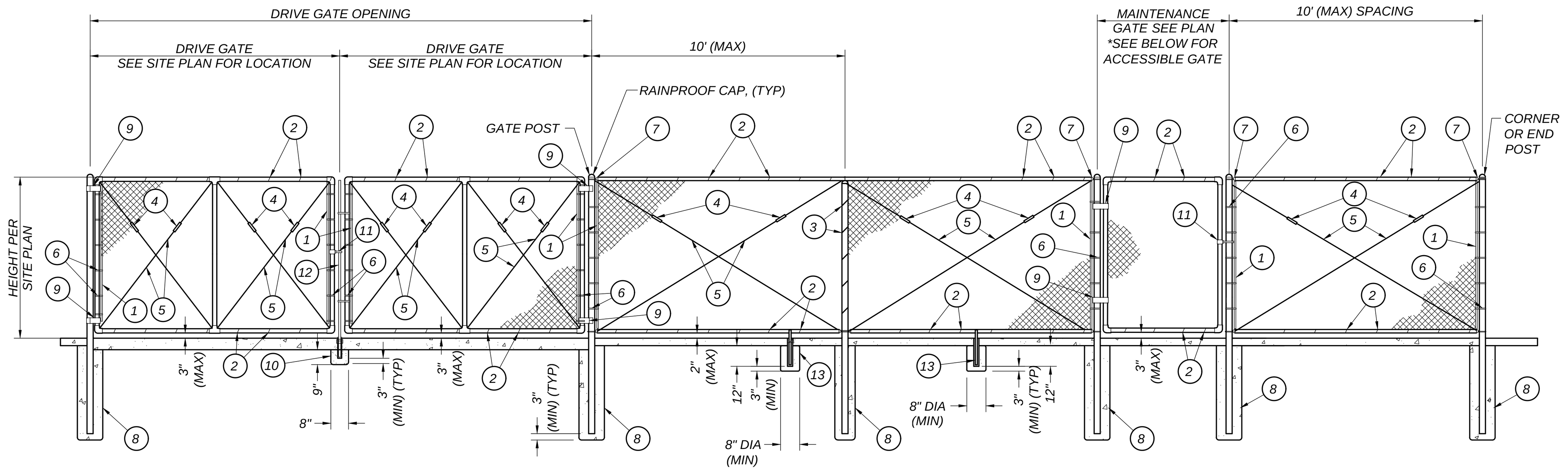

FENCE AND GATE ELEVATIONS

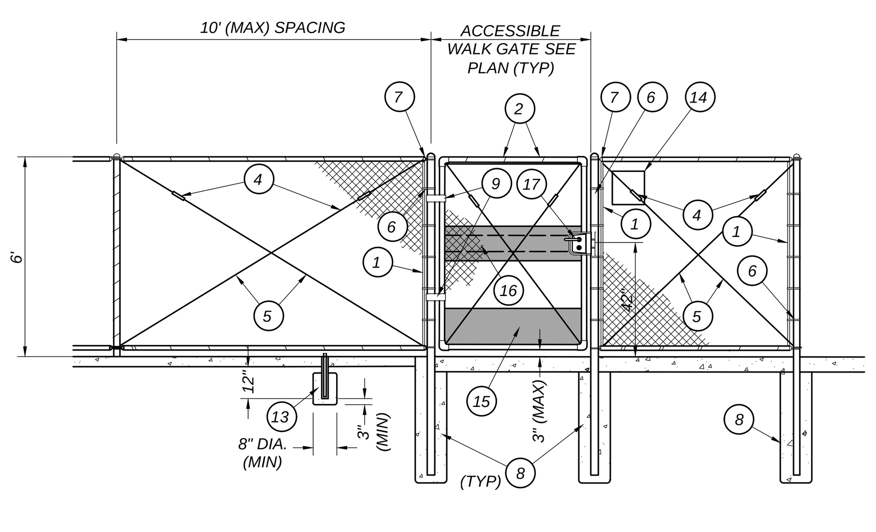

ACCESSIBLE PEDESTRIAN GATE AT 6' TALL FENCE

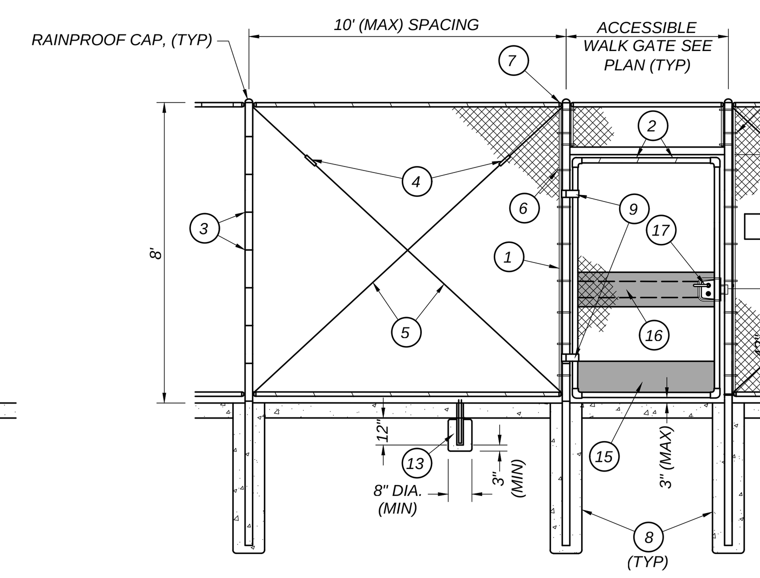

ACCESSIBLE PEDESTRIAN GATE AT 8' TALL FENCE

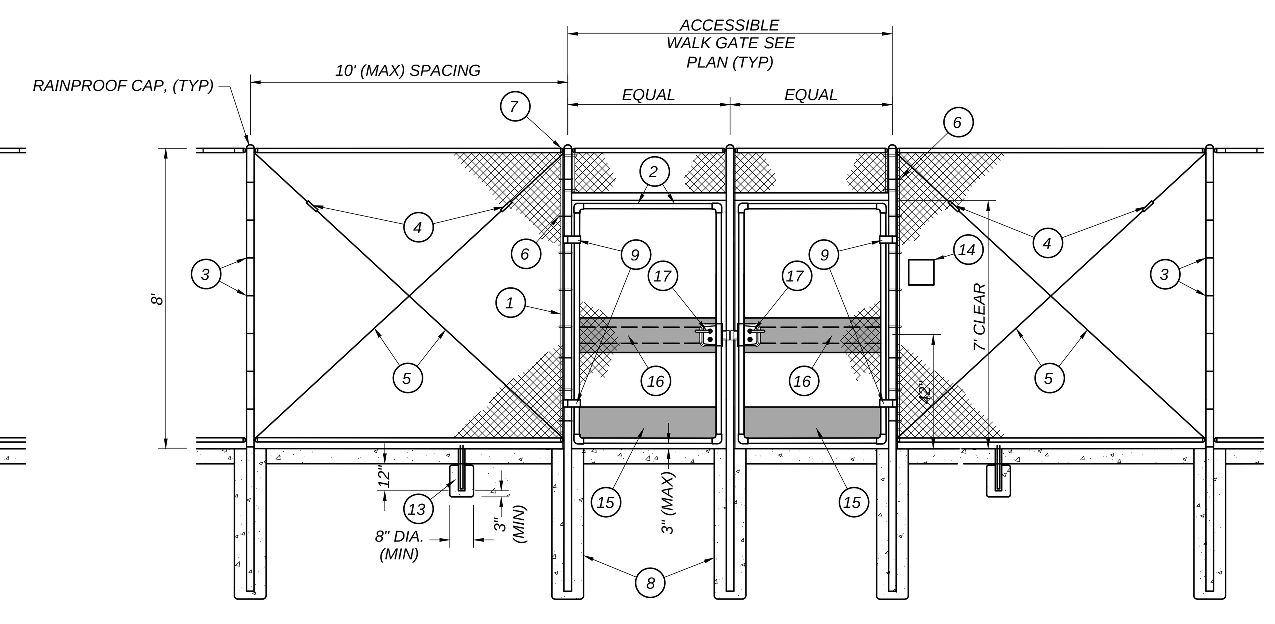

ACCESSIBLE PEDESTRIAN DOUBLE GATE AT 8' TALL FENCE

CHAIN LINK FENCE SIZING SCHEDULE - OPEN FABRIC AND SLATTED FABRIC

FENCE HEIGHT	END, ANGLE, CORNER POSTS			LINE POSTS			SINGLE LEAF MAN GATE POSTS			DOUBLE GATE POSTS			FENCE FABRIC	COMMENT
	POST DIAMETER	FOOTING DIAMETER	FOOTING DEPTH	POST DIAMETER	FOOTING DIAMETER	FOOTING DEPTH	POST DIAMETER	FOOTING DIAMETER	FOOTING DEPTH	POST DIAMETER	FOOTING DIAMETER	FOOTING DEPTH	MESH DIMENSION	
6'	2-7/8" O.D.	12"	4'-0"	2-3/8" O.D.	12"	3'-3"	2-7/8" O.D.	12"	4'-0"	6" O.D.	15"	5'-0"	2" X 2"	1.66" O.D. TOP AND BOTTOM RAIL, SCHEDULE 40
8'	4-1/2" O.D.	SEE STRUCUTRAL PLANS FOR DETAILS [25/S4.01-1] AND [35/S4.01-1]		4" O.D.	SEE STRUCUTRAL PLANS FOR DETAILS [25/S4.01-1] AND [35/S4.01-1]		4-1/2" O.D.	SEE STRUCUTRAL PLANS FOR DETAILS [25/S4.01-1] AND [35/S4.01-1]		6" O.D.	SEE STRUCUTRAL PLANS FOR DETAILS [25/S4.01-1] AND [35/S4.01-1]		1" X 1"	

OPEN FABRIC AND SLATTED FABRIC CHAIN LINK FENCE AND GATE LEGEND:

1. 1/8" X 3/4" GALVANIZED STEEL STRETCHER BAR.
2. 9 GAUGE (0.148" DIA) GALVANIZED STEEL TIE WIRES OR HOG RINGS AT 15" MAXIMUM SPACING. MINIMUM OF 8 TIE WIRES PER EACH 10' HORIZONTAL RAIL.
3. 6 GAUGE (0.192" DIA) GALVANIZED STEEL POST CLIPS AT 14" MAXIMUM SPACING. MINIMUM 3 POST CLIPS FOR EACH 4' POST.
4. GALVANIZED ADJUSTABLE TURNBUCKLE FOR 3/8" DIAMETER TRUSS ROD.
5. 3/8" DIAMETER GALVANIZED STEEL ADJUSTABLE TRUSS ROD. TRUSS RODS REQUIRED FOR ALL GATE POST PANELS, END OR CORNER POST PANELS.
6. 1/8" THICK GALVANIZED STEEL STRETCHER BAR TENSION BAND AT 12" MAXIMUM SPACING. MINIMUM OF 4 TENSION BANDS FOR EACH 4' POST SECTION.
7. GALVANIZED RAIL ENDS.
8. CONCRETE FOOTING, TYPICAL.
9. HINGES PER THE SPECIFICATION.
10. GALVANIZED STEEL PIPE SLEEVE FOR GATE DROP ROD.
11. LOCKABLE FORK LATCH PER SPECIFICATIONS
12. CENTER GATE DROP POST AND LATCH
13. INSTALL GATE HOLDBACK FOR ALL GATES.
14. ACCESSIBLE GATE SIGN PER DETAIL [D/CX1.02-1]
15. 10" HIGH, 1/8" THICK STEEL PLATES WELDED ON BOTH SIDES OF THE GATE AT BOTTOM FULL WIDTH OF THE GATE. THE KICK PLATE AND WELDS SHALL BE GALVANIZED FOR CORROSION RESISTANCE.
16. 12" HIGH, CENTER ON LATCH, 1/8" THICK STEEL PLATES WELDED ON THE NON FABRIC SIDE, THE FULL WIDTH OF THE GATE. THE PLATE AND WELDS SHALL BE GALVANIZED FOR CORROSION RESISTANCE. SEE DETAIL [B/CX1.03-1]
17. ALL WALK GATES SHALL HAVE ADA/ CBC COMPLIANT ACCESSIBLE HARDWARE WHEN LOCATED WITHIN ACCESSIBLE PATH OF TRAVEL. GATE LATCH SHALL REQUIRE A MAXIMUM OF 5 LBS OF PRESSURE TO OPERATE. PROVIDE GATE NIGHT LATCH AND HARDWARE PER SPECIFICATIONS AT EGRESS GATES. SEE NOTE 11.

OPEN FABRIC AND SLATTED FABRIC CHAIN LINK FENCE AND GATE NOTES:

1. GATE FRAME SHALL BE 2" O.D. GALVANIZED STEEL (2.72 LB/FT).
2. FOR POOL PERIMETER FENCING AND WHERE ADJACENT TO BALLFIELDS, THE FENCE FABRIC SHALL BE 1" X 1" MESH X 9 GAUGE GALVANIZED FENCE FABRIC. FOR ALL OTHER FENCING, THE FENCE FABRIC SHALL BE 2" X 2" MESH X 9 GAUGE GALVANIZED FABRIC. ALL FENCE FABRIC SHALL HAVE A KNUCKLED TOP AND BOTTOM SELVAGE. FENCE FABRIC TO GALVANIZED BEFORE WEAVING, 1.2 OZ TYPE II CLASS. COLOR SELECTED BY OWNER.
3. ALL FENCES ADJACENT TO ATHLETIC FIELDS, COURTS, BALLFIELDS, OR RUNNING TRACKS SHALL HAVE 1.66" O.D. BOTTOM RAILS INSTEAD OF TENSION WIRE
4. MATCH OWNER'S LOCKSET GATE HARDWARE AND KEYING SYSTEM FOR ALL KEYED GATES.
5. WALK GATE POST SIZE LIMITED TO 6 FOOT WIDTH OR LESS. SEE DRIVE GATE SIZING FOR LARGER LEAF WIDTHS.
6. DOUBLE TRUSS RODS ARE REQUIRED IN PANELS ADJACENT TO GATE POSTS AND AT ALL FENCE CORNERS AND END PANELS.
7. ALL GATE CORNERS AND SUPPORT POINTS SHALL BE FASTENED TOGETHER AND REINFORCED WITH MALLEABLE IRON FITTINGS DESIGNED FOR THAT PURPOSE. WELDED CONNECTIONS WILL NOT BE ALLOWED.
8. TACK WELD ALL GATE HINGES AND LATCH COLLARS TO POST.
9. ALL AREAS AFFECTED BY WELDING, TRIMMED ENDS OF BOLTS, STRETCHER BARS, TRUSS RODS OR ANY EXPOSED STEEL SHALL BE PAINTED (GALVANIZED) PER CONTRACT SPECIFICATIONS.
10. CONTRACTOR TO PROVIDE AND INSTALL GATE HOLDBACK FOR EACH GATE. HOLDBACK TO BE INSTALLED IN FENCE MOWSTRIP UNLESS OTHERWISE NOTED.
11. ALL ACCESSIBLE GATES SHALL HAVE:
a. HANDLES, PULLS, LATCHES, LOCKS AND OTHER OPERABLE PARTS ON DOORS AND GATES SHALL COMPLY CBC SECTION 11B-404.2.7 OPERABLE PARTS OF SUCH HARDWARE SHALL BE 34 INCHES MINIMUM AND 44 INCHES MAXIMUM ABOVE THE FINISH FLOOR OR GROUND. THE MAXIMUM FORCED TO ACTIVATE OPERABLE PARTS SHALL BE 5LBS PER CBC 11B-309.4.

b. SWINGING DOOR AND GATE SURFACES WITHIN 10 INCHES OF THE FINISH FLOOR OR GROUND MEASURED VERTICALLY SHALL HAVE A SMOOTH SURFACE ON BOTH SIDES EXTENDING THE FULL WIDTH OF THE DOOR OR GATE. PARTS CREATING HORIZONTAL OR VERTICAL JOINTS IN THESE SURFACES SHALL BE WITHIN 1/16 INCH OF THE SAME PLANE AS THE OTHER AND BE FREE OF SHARP OR ABRASIVE EDGES. CAVITIES CREATED BY ADDED KICK PLATES SHALL BE CAPPED.
12. CLOSERS SHALL BE ADJUSTED SO THAT FROM AN OPEN POSITION OF 90 DEGREES, THE TIME REQUIRED TO MOVE THE DOOR TO A POSITION OF 12 DEGREES FROM THE LATCH IS 5 SECONDS MINIMUM PER CBC 11B-404.2.8.1.
13. GATE SPRING HINGES SHALL BE ADJUSTED SO THAT FROM AN OPEN POSITION OF 70 DEGREES, THE TIME REQUIRED TO MOVE THE DOOR TO THE CLOSED POSITION IS 1.5 SECONDS MINIMUM PER CBC 11B-404.2.8.2.
14. ACCESSIBLE GATE SHALL HAVE A MINIMUM CLEAR OPENING OF 32 INCHES AND A MAXIMUM CLEAR OPENING OF 48 INCHES PER CBC 11B-404.2.3
15. THE MAXIMUM FORCE TO PUSH OR PULL OPEN A GATE SHALL BE 5 LBS. (11B-404.2.9)

A — CX1.03-1 — CHAIN LINK FENCE AND GATES
NOT TO SCALE

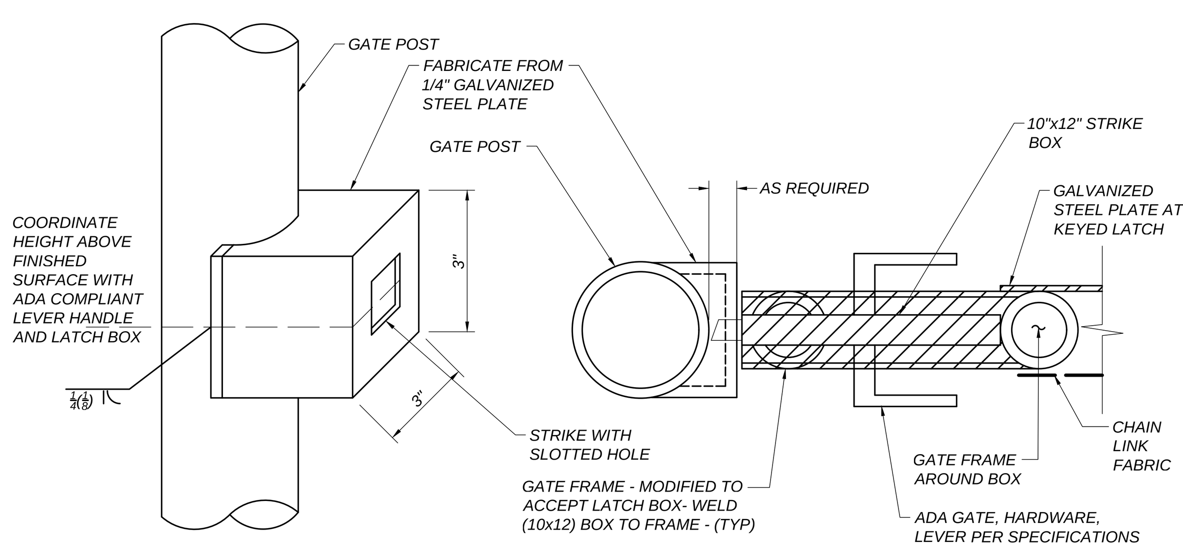

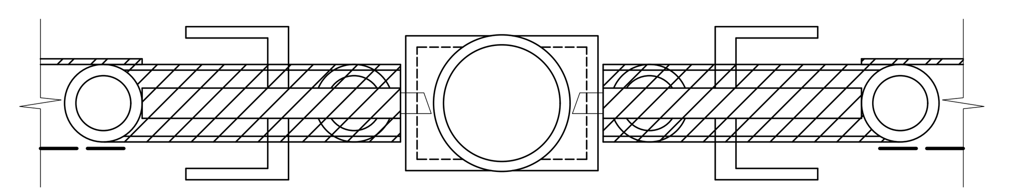

GATE LATCH PASSAGE NON-KEYED

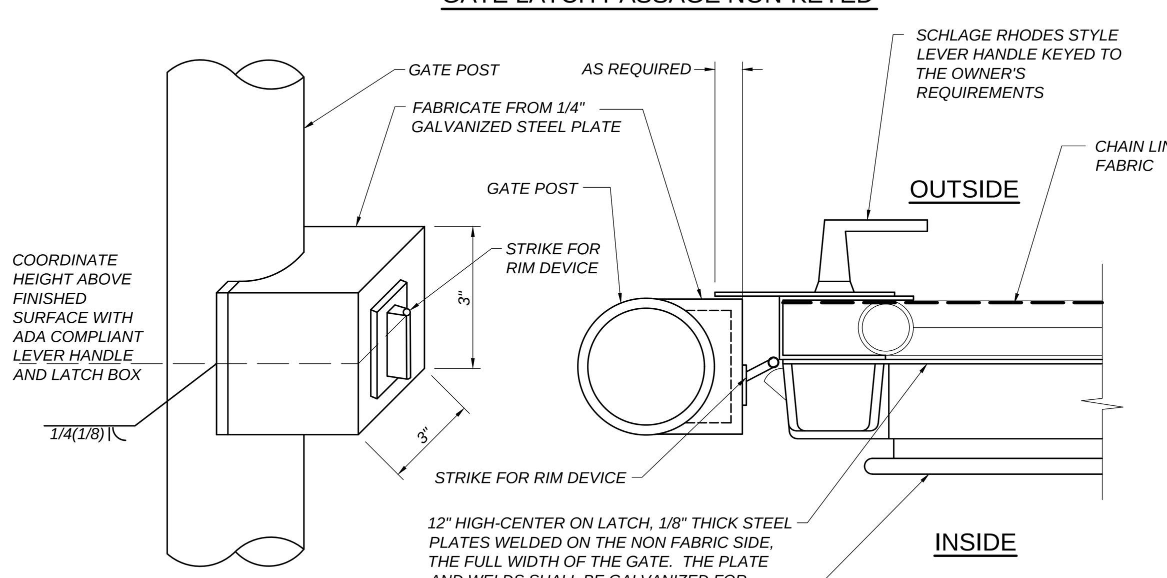

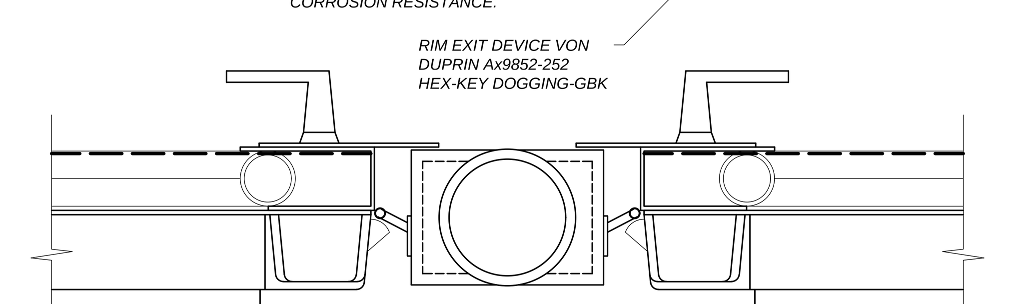

EXIT GATE WITH NIGHT LATCH

B — CX1.03-1 — ACCESSIBLE LATCH
NOT TO SCALE

FENCE AND ROLL GATE ITEMS:

1. 2-7/8" O.D. GALVANIZED STEEL POST (5.79 lbs/ft)
2. 2-3/8" O.D. GALVANIZED STEEL LINE POST (3.65 lbs/ft)
3. 2" O.D. GALVANIZED STEEL GATE FRAME (2.72 lbs/ft)
4. 1-5/8" O.D. GALVANIZED STEEL HORIZONTAL RAIL (2.27 lbs/ft)
5. 2" X 2" MESH X 9 GAUGE GALVANIZED FENCE FABRIC WITH KNUCKLED TOP AND BOTTOM SELVAGE. GALVANIZE BEFORE WEAVING, (GBW)
6. 1/4" X 3/4" GALVANIZED STEEL STRETCHER BAR
7. 9 GAUGE (0.148" DIA.) GALVANIZED STEEL TIE WIRES OR HOG RINGS AT 15" MAXIMUM SPACING
8. 9 GAUGE (0.192" DIA.) GALVANIZED STEEL POST CLIPS AT 14" MAXIMUM SPACING
9. 6" TURNBUCKLE ADJUSTERS FOR 3/8" DIA. TRUSS RODS
10. 3/8" DIA. GALVANIZED STEEL ADJUSTABLE TRUSS RODS

NOTES ON FENCING AND GATES:

1. DOUBLE TRUSS RODS ARE REQUIRED IN PANEL ADJACENT TO OPENING, GATE POSTS, AT ALL FENCE CORNERS AND IN ALL GATE PANELS.
2. CONTRACTOR TO PROVIDE AND INSTALL GATE HOLDBACK FOR EACH GATE. HOLDBACK TO BE INSTALLED IN FENCE MOWSTRIP UNLESS OTHERWISE NOTED.
3. MOWSTRIP AT DRIVE GATE OPENING SHALL BE 5-1/2" THICK.
4. USE FITTINGS FOR ALL GATE JOINTS AND TRUSS ROD CONNECTIONS. NO WELDING PERMITTED.
5. LENGTH OF ROLL GATE SHALL MATCH THE GATE OPENING SHOWN ON THE SITE PLAN

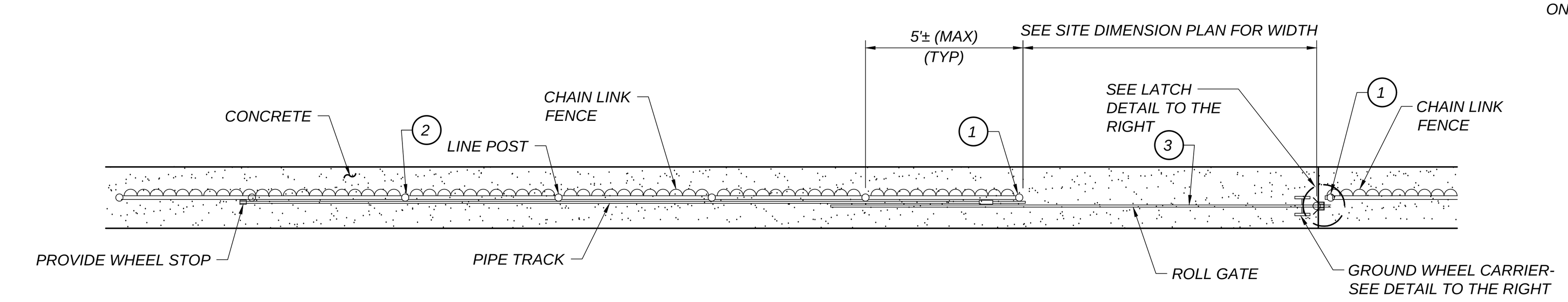

NOTE:
ROLL GATE ORIENTATION SHOWN IN THE DETAIL BELOW MAY NOT APPLY TO THE GATE INSTALLATION SHOWN ON THE SITE PLAN. SEE SITE PLAN FOR ROLL GATE ORIENTATION AND OPENING DIRECTION

PLAN VIEW

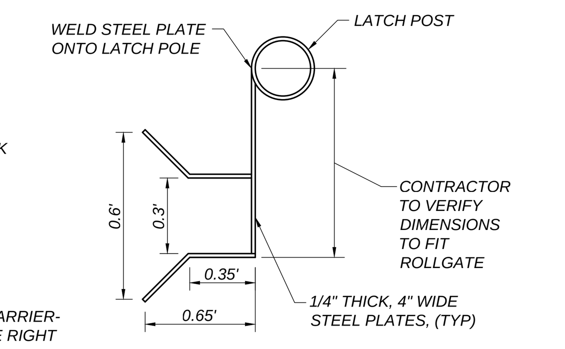

LATCH
NOT TO SCALE

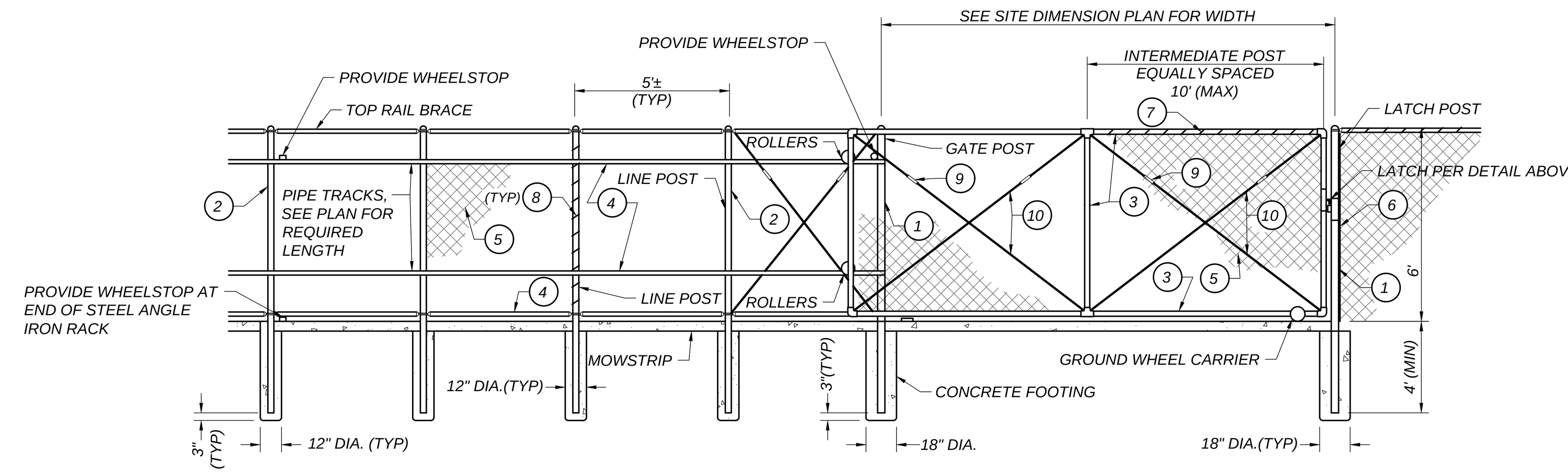

FRONT VIEW

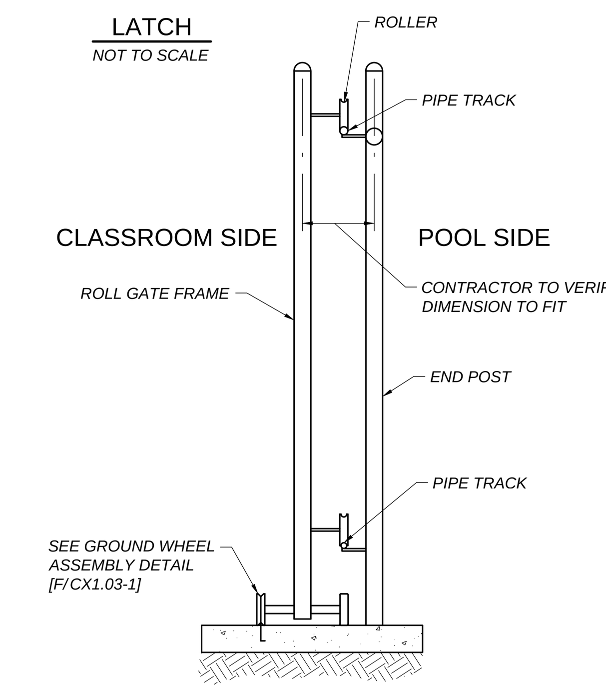

SIDE VIEW

C — CX1.03-1 — ROLL GATE INSTALLATION
NOT TO SCALE

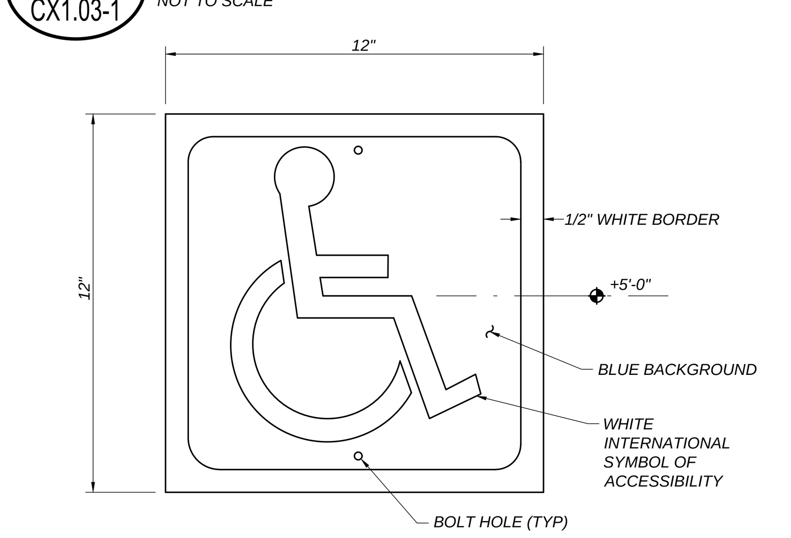

NOTES:
1. SIGN BY "STOP SIGNS AND MORE", MODEL SKU:PAR-1124 WITH WEATHER AND GRAFFITI PROTECTION OR APPROVED EQUAL.
2. BACKING PLATE 12"x12"x16 GAUGE METAL PLATE, SANDWICH CHAIN LINK FABRIC BETWEEN SIGN AND BACKING PLATE. FASTEN TOGETHER WITH TAMPER RESISTANT THRU BOLTS SIMILAR TO DETAIL [E/CX1.03-1].

D — CX1.03-1 — ENTRY ACCESSIBILITY SIGN
NOT TO SCALE

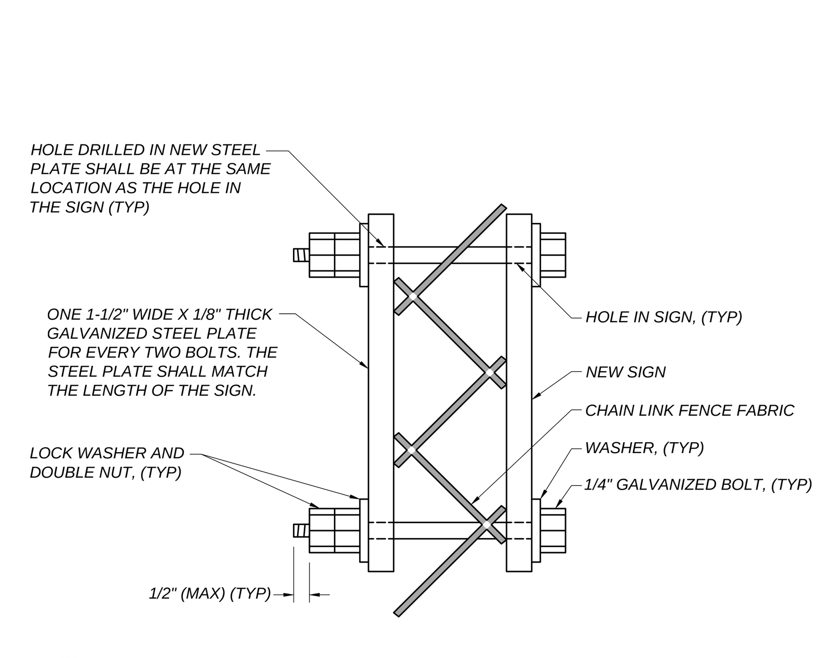

E — CX1.03-1 — SIGN MOUNTING DETAIL
NOT TO SCALE

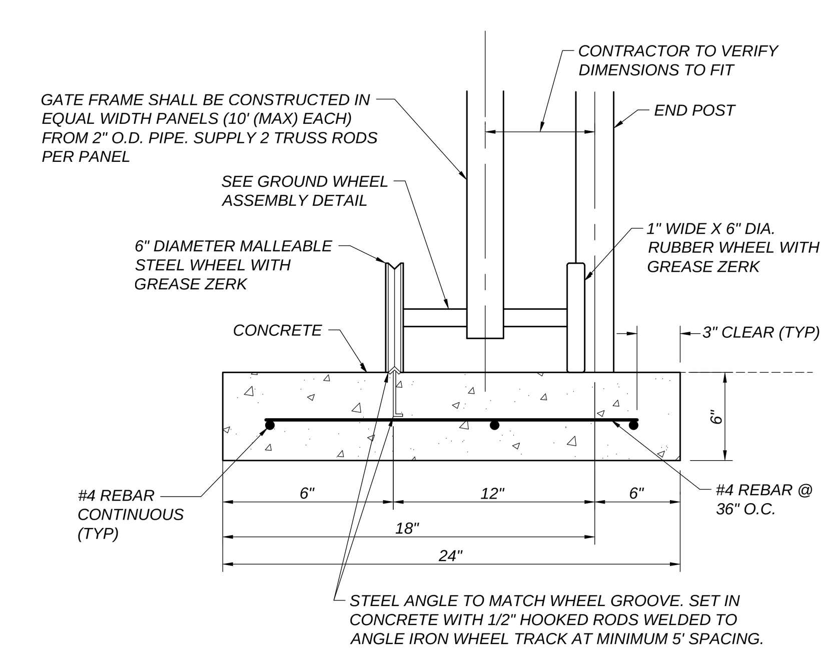

F — CX1.03-1 — ROLLGATE GROUND WHEEL CARRIER ASSEMBLY
NOT TO SCALE

COUNTY OF FRESNO ENVIRONMENTAL HEALTH DIVISION
1221 Fulton Street – 3rd Floor (559) 600-3357
APPROVED
WITH NOTED CORRECTIONS AND
SUBJECT TO FIELD INSPECTIONS
DATE: 8/26/25
BY:
APPROVAL OF THIS PLAN DOES NOT CONSTITUTE PERMISSION TO VIOLATE ANY APPLICABLE CITY OR COUNTY ORDINANCE, OR STATE LAW, AND SHALL NOT PREVENT THIS DEPARTMENT FROM REQUIRING CORRECTION OF ERRORS OR OMISSIONS IN PLANS, SPECIFICATIONS OR CONSTRUCTION.

Blair, Church & Flynn
CONSULTING ENGINEERS
451 Clovis Avenue, Suite 200
Clovis, California 93612
Tel (559) 326-1400
Fax (559) 326-1500

AGD
ARCHITECTURE | DESIGN
ANDREW GOODWIN DESIGNS
1238 MONTEREY STREET
SAN LUIS OBISPO, CA 93422
t: (805) 439-1611
www.andrewgoodwin.us

These drawings are instruments of service and are the property of Andrew Goodwin Designs, Inc. The information represented on these drawings are exclusively for the project indicated and shall not be transferred or otherwise reproduced without express written permission of Andrew Goodwin.
Copyright 2023

REVISIONS
REV # | REV DATE | REV DESCRIPTION

SEAL
NOT FOR CONSTRUCTION
REGISTERED PROFESSIONAL ENGINEER
WAYNE R. BAIRD
No. 47033
CIVIL
STATE OF CALIFORNIA
08/01/2025
Date Signed:

PROJECT
TRANQUILLITY HIGH SCHOOL
AQUATIC CENTER MODERNIZATION
6052 Juanche Ave,
Tranquillity, CA 93668

CLIENT
GOLDEN PLAINS UNIFIED SCHOOL DISTRICT

SHEET TITLE
DETAILS

PHASE DESCRIPTION
100% CD FCHD APPROVAL
SWIMMING POOL

DATE: 8/26/2025
TECHNICIAN: SD
PROJECT MANAGER: LB
JOB NUMBER: 791
SHEET NUMBER
CX1.03-1

Drawing: U:\224\224-0237\Site\ProductionDrawings\224237_DT01.dwg; CX1.03-1 - BCF.ctb
Plot by: sjue Aug 01, 2025 - 3:09pm

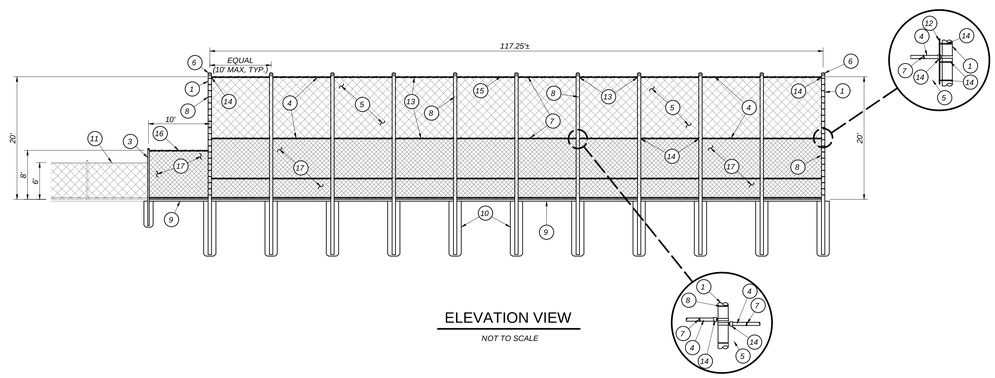

ELEVATION VIEW

NOT TO SCALE

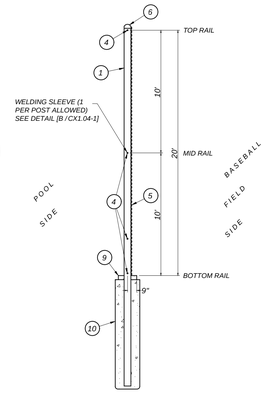

SECTION C-C

NOT TO SCALE

LEGEND:

FENCING ITEMS TO BE FURNISHED AND INSTALLED:

1. 8-5/8" O.D. GALVANIZED STEEL POST (28.58 LB/FT).
2. NOT USED
3. 8' FENCING POST PER DETAIL [A/CX1.03-1].
4. 1-5/8" O.D. GALVANIZED HORIZONTAL RAIL (2.27 LB/FT).
5. 2" MESH X 9 GAUGE GALVANIZED FABRIC WITH KNUCKLED TOP AND BOTTOM SELVAGE. FABRIC TO BE GALVANIZED BEFORE WEAVING (GBW).
6. RAIN-PROOF POST CAP.
7. 9 GAUGE (0.148" DIAMETER) GALVANIZED STEEL TIE WIRES AT 14" MAXIMUM SPACING (MINIMUM OF 9 TIES BETWEEN 10' SPACED POST).
8. 9 GAUGE (0.148" DIAMETER) GALVANIZED STEEL POST CLIPS AT 14" MAXIMUM SPACING (MINIMUM OF 7 CLIPS PER EACH 8' POST SECTIONS, 9 CLIPS FOR 10')
9. CONCRETE MOWSTRIP, SEE DETAIL ON SHEET CX1.01.
10. CONCRETE POST FOOTING. POUR AGAINST UNDISTURBED SOIL, SEE STRUCTURAL DETAILS [25/S4.01-1] AND [35/S4.01-1].
11. EXISTING FENCING.
12. 1/4" X 3/4" GALVANIZED STEEL STRETCHER BAR.
13. GALVANIZED STRETCHER BAR BANDS AT 12" MAXIMUM SPACING (MINIMUM OF 7 BANDS PER EACH 8' POST SECTIONS, 9 BANDS FOR 10', 28 BANDS FOR 30' POST SECTIONS).
14. GALVANIZED RAIL END.
15. 20' HIGH CHAIN LINK FENCE (2-10' HIGH PANELS).
16. 8' HIGH CHAIN LINK FENCE (1-8' HIGH PANEL) PER DETAIL [A/CX1.03-1].
17. 1" MESH X 9 GAUGE SLATTED GALVANIZED FABRIC WITH KNUCKLED TOP AND BOTTOM SELVAGE. FABRIC TO BE GALVANIZED BEFORE WEAVING (GBW)

NOTES:

1. 20 FT. HIGH FENCE SHALL BE CONSTRUCTED WITH MINIMUM 29 FT. LONG GALVANIZED STEEL POST WITH WELDING SLEEVE INSERT. ONE SLEEVE PER POST ALLOWED. SEE DETAIL [B/CX1.04-1 FOR WELD SLEEVE DETAIL. (POST MAY BE IN ONE PIECE.)
2. ALL SCREWS, NUTS, AND WASHERS SHALL BE GALVANIZED STEEL.
3. ALL DAMAGED GALVANIZED SURFACES AND WELDED AREAS SHALL BE CLEANED AND PAINTED WITH A MINIMUM OF TWO (2) COATS OF ZINC OXIDE PER THE REQUIREMENTS OF FEDERAL SPECIFICATION MIL-P-15145 AND TWO ALUMINUM COLOR COATS.
4. FACE OF ALL BACKSTOPS POSTS ARE TO ALIGN WITH THE FACE OF 6-5/8" O.D. POSTS. THE CENTER OF 6-5/8" O.D. POST TO BE 9" FROM EDGE OF CONCRETE.
5. ALL EXPOSED EDGES OF GALVANIZED ANGLE IRON SHALL BE ROUNDED SMOOTH OR GROUND SMOOTH.
6. ALL CONCRETE SHALL BE CALTRANS CLASS II UNLESS NOTED OTHERWISE IN THE PLANS OR SPECIFICATIONS.
7. ALL CONCRETE TO BE IN CONFORMANCE TO SECTION 90 OF STATE OF CALIFORNIA DEPARTMENT OF TRANSPORTATION (CALTRANS) STANDARD SPECIFICATIONS, LATEST EDITION.
8. AFTER INSTALLATION, CUT END OF SCREWS SO THAT MAXIMUM EXTRUSION BEYOND NUT IS NO MORE THAN 1/4".
9. TACK WELD ALL NUTS ONTO BOLTS BELOW 8' IN HEIGHT.

A / CX1.04-1 FENCE AT BALLFIELD

NOT TO SCALE

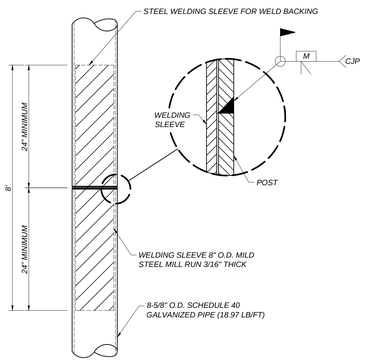

B / CX1.04-1 WELDING SLEEVE

NOT TO SCALE

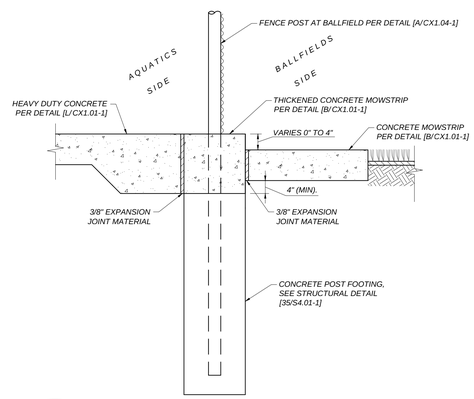

C / CX1.04-1 GRADE DIFFERENTIAL AT BALLFIELD FENCE

NOT TO SCALE

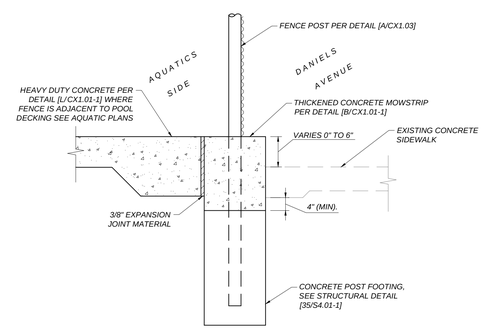

D / CX1.04-1 GRADE DIFFERENTIAL ALONG DANIELS AVENUE

NOT TO SCALE

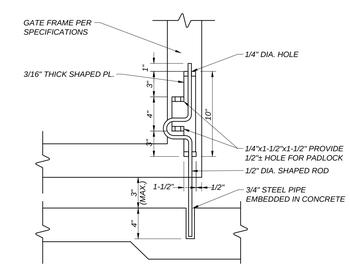

E / CX1.04-1 DROP ROD

NOT TO SCALE

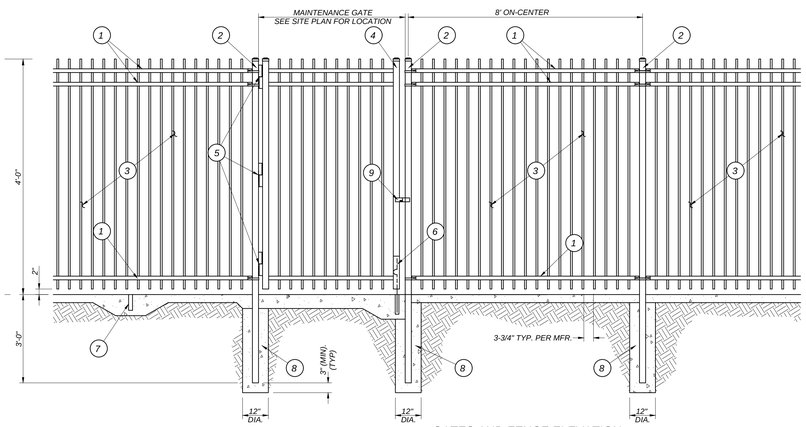

GATES AND FENCE ELEVATION

DECORATIVE METAL FENCE AND GATE LEGEND:

1. 1-3/4"W x 1-3/4"H x 12GA. HORIZONTAL RAILING FENCE PER THE MANUFACTURER
2. 12GA. TUBE STEEL POST PER MANUFACTURER; LINE POSTS AND GATE POSTS SIZED PER THE MANUFACTURER
3. 1" SQ. x 14GA. STEEL PICKETS PER MANUFACTURER
4. METAL GATE FRAME PER MANUFACTURER
5. HINGES PER THE SPECIFICATIONS
6. DROP ROD DETAIL, SEE DETAIL [E/CX1.04-1]
7. INSTALL GATE HOLDBACK FOR ALL GATES, SEE DETAIL [E/CX1.04-1]
8. CONCRETE FOOTING, TYPICAL.
16. ALL MAINTENANCE GATES SHALL HAVE LOCKABLE GATE LATCH.

FENCE AND GATE NOTES:

1. FENCE TO BE AMERISTAR MONTAGE II MAJESTIC 3-RAIL OR APPROVED EQUAL. CONTRACTOR TO COORDINATE PLACEMENT OF STEEL POSTS FOR FENCING WHICH OCCURS ADJACENT TO BUILDINGS, COLUMNS OR BLOCK WALLS PLACING CONCRETE. VERIFY CLEAR OPENINGS IN FIELD PRIOR TO CONSTRUCTION.
2. FENCE PANEL SYSTEM SHALL BE INDUSTRIAL GRADE.
3. MOWSTRIP THICKNESS AT GATE OPENINGS TO BE 6" THICK.
4. CONTRACTOR TO PROVIDE AND INSTALL GATE HOLDBACK FOR EACH GATE. HOLDBACK TO BE INSTALLED IN FENCE MOWSTRIP UNLESS OTHERWISE NOTED.

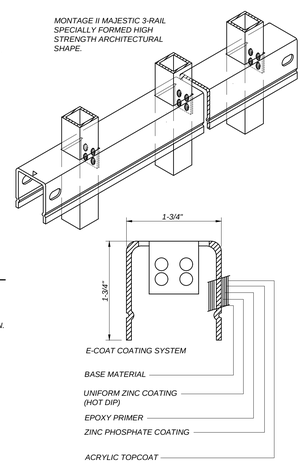

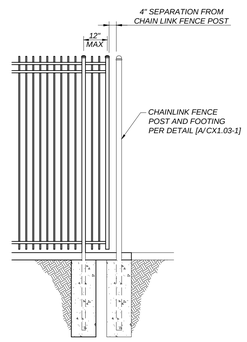

SEPARATION AT CHAINLINK FENCE

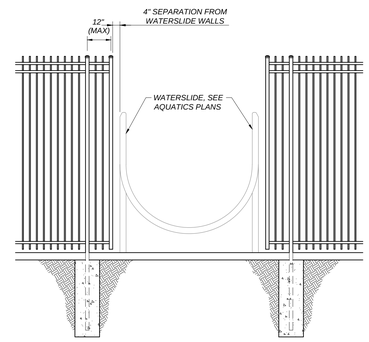

SEPARATION AT WATERSLIDE

F / CX1.04-1 FENCE AT WATERSLIDE

NOT TO SCALE

COUNTY OF FRESNO ENVIRONMENTAL HEALTH DIVISION
1221 Fulton Street – 3rd Floor (559) 600-3357
APPROVED WITH NOTED CORRECTIONS AND SUBJECT TO FIELD INSPECTIONS
DATE: 8/26/25
BY:
APPROVAL OF THIS PLAN DOES NOT CONSTITUTE PERMISSION TO VIOLATE ANY APPLICABLE CITY OR COUNTY ORDINANCE, OR STATE LAW, AND SHALL NOT PREVENT THIS DEPARTMENT FROM REQUIRING CORRECTION OF ERRORS OR OMISSIONS IN PLANS, SPECIFICATIONS OR CONSTRUCTION.

Blair, Church & Flynn
CONSULTING ENGINEERS
451 Clovis Avenue, Suite 200
Clovis, California 93612
Tel (559) 326-5400
Fax (559) 326-1500

AGD ARCHITECTURE | DESIGN
ANDREW GOODWIN DESIGNS
1238 MONTEREY STREET
SAN LUIS OBISPO, CA 93422
t: (805) 439-1611
www.andrewgoodwin.us

These drawings are instruments of service and are the property of Andrew Goodwin Designs, Inc. The information represented on these drawings are exclusively for the project indicated and shall not be transferred or otherwise reproduced without express written permission of Andrew Goodwin.
Copyright 2023

REVISIONS

REV #	REV DATE	REV DESCRIPTION

SEAL

NOT FOR CONSTRUCTION

08/01/2025
Date Signed:

PROJECT

TRANQUILLITY HIGH SCHOOL
AQUATIC CENTER MODERNIZATION
6052 Juanche Ave,
Tranquillity, CA 93668

CLIENT

GOLDEN PLAINS UNIFIED SCHOOL DISTRICT

SHEET TITLE

DETAILS

PHASE DESCRIPTION
100% CD FCHD APPROVAL
SWIMMING POOL

DATE: 8/26/2025

TECHNICIAN: SD

PROJECT MANAGER: LB

JOB NUMBER: 791

SHEET NUMBER

CX1.04-1

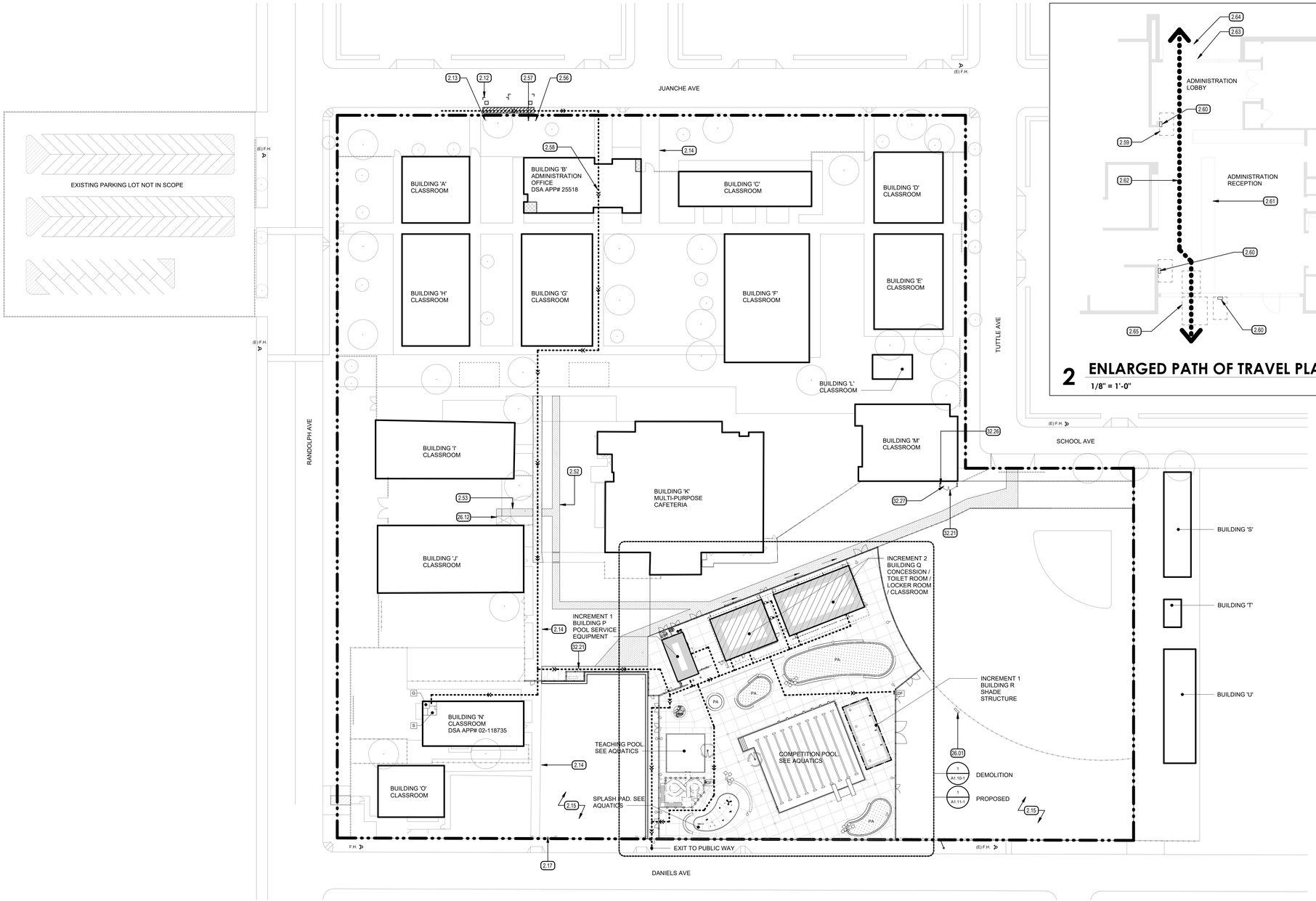

1 PROPOSED OVERALL SITE PLAN

1" = 40'-0"

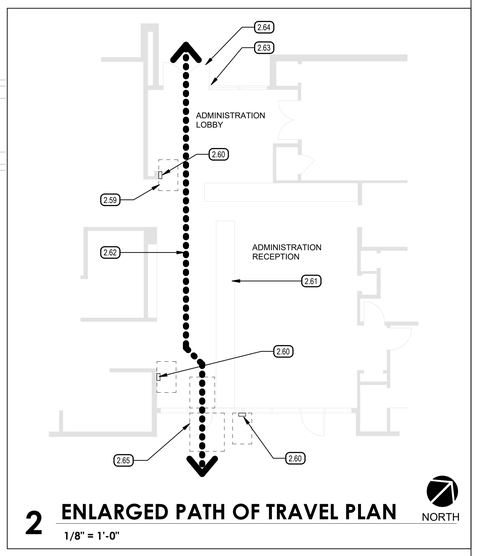

2 ENLARGED PATH OF TRAVEL PLAN

1/8" = 1'-0"

2.12 EXISTING OFF-SITE ACCESSIBLE PARKING STALL WITH PAINTED BLUE CURB.
2.13 EXISTING ACCESSIBLE PARKING STALL SIGN TO REMAIN
2.14 EXISTING CONCRETE WALK TO REMAIN
2.15 EXISTING LANDSCAPE AND IRRIGATION TO REMAIN. SEE LANDSCAPE.
2.17 EXISTING SLIDING CHAIN LINK GATE TO REMAIN
2.52 PATCH AND RECOMPACT SOIL TO MATCH EXISTING ADJACENT CONDITIONS.
2.53 PATCH EXISTING CONCRETE TO MATCH EXISTING ADJACENT CONDITIONS.
2.56 (N) TOW-AWAY SIGN WARNING. 11 / A8.00-1
2.57 (N) VAN ACCESSIBLE PARKING STALL SIGN, SEE11 / A8.00-1
2.58 PATH OF TRAVEL THROUGH ADMINISTRATION OFFICE. SEE2 / A1.00-1
2.59 30" X 48" CLEAR FLOOR SPACE
2.60 ACCESSIBLE DOOR OPERATOR PUSH BUTTON. SEE 14 / A8.00-1 15 / A8.00-1
2.61 EXISTING BASE CABINET TO REMAIN, TYP.
2.62 ACCESSIBLE PATH OF TRAVEL, SEE OVERALL SITE PLAN FOR CONTINUATION.
2.63 EXISTING SECURE ENTRY INTERCOM PUSH BUTTON.16 / A8.00-1
2.64 EXISTING 72" WIDE x 84" TALL ELECTRONICALLY OPERATED DOUBLE SWING DOOR. 16 / A8.00-1
2.65 EXISTING 36" WIDE x 84" TALL ELECTRONICALLY OPERATED SINGLE SWING DOOR. 13 / A8.00-1
26.01 PRE-CHECKED SCOREBOARD. SEE SCOREBOARD MANUFACTURER AND ELECTRICAL.
26.12 EXISTING ELECTRICAL MAIN SWITCH BOARD, SEE ELECTRICAL.
32.21 CHAIN LINK FENCING & GATES, SEE CIVIL
32.26 REINSTALL SALVAGE BOOSTER PUMP, SEE CIVIL AND LANDSCAPE.
32.27 IRRIGATION COMPONENT, SEE LANDSCAPE.

KEYNOTES (XX.XX)

- SITE CONCRETE, SEE CIVIL.
- PROPOSED PRE-MANUFACTURED SHADE STRUCTURE. SEE MANUFACTURES DRAWINGS
- EXISTING BUILDING NOT INCLUDED IN SCOPE OF WORK
- PORTION OF EXISTING BUILDING INCLUDED IN SCOPE OF WORK. SEE ELECTRICAL
- PROPOSED BUILDING P
- PROPOSED BUILDING Q (INCREMENT 2)
- LA — LANDSCAPE AREA, SEE LANDSCAPE
- CHAIN LINK FENCE WITH MOWSTRIP. SEE CIVIL
- DECORATIVE METAL FENCE. SEE CIVIL
- LIGHT POLE, SEE ELECTRICAL
- SURFACE MOUNTED LIGHT FIXTURE AT SHADE STRUCTURE, SEE ELECTRICAL
- (E)F.H. — FIRE HYDRANT, SEE CIVIL.
- PA — PLANTER AREA, SEE LANDSCAPE.
- PROPERTY LINE
- ACCESSIBLE ROUTE (2022 C.B.C. SECTION 11B - 206)
- G — ACCESSIBLE GENDER NEUTRAL STUDENT TOILET DSA APPLICATION NUMBER 02-118735
- S — ACCESSIBLE GENDER NEUTRAL STAFF TOILET ROOM DSA APPLICATION NUMBER 02-118735
- DF — ACCESSIBLE DRINKING FOUNTAIN. THIS DSA APPLICATION NUMBER AS PART OF INCREMENT 1
- M2 — ACCESSIBLE MENS TOILET ROOM. THIS DSA APPLICATION NUMBER AS PART OF INCREMENT 2
- W2 — ACCESSIBLE WOMENS TOILET ROOM. THIS DSA APPLICATION NUMBER AS PART OF INCREMENT 2
- S2 — ACCESSIBLE GENDER NEUTRAL STAFF TOILET ROOM THIS DSA APPLICATION NUMBER AS PART OF INCREMENT 2

THE ACCESSIBLE ROUTE, AS DEFINED IN THE CALIFORNIA BUILDING CODE, IS A CONTINUOUS UNOBSTRUCTED PATH CONNECTING ACCESSIBLE ELEMENTS AND SPACES OF AN ACCESSIBLE SITE, BUILDING OR FACILITY THAT CAN BE NEGOTIATED BY A PERSON WITH A DISABILITY USING A WHEELCHAIR, AND THAT IS ALSO SAFE FOR AND USABLE BY PERSONS WITH OTHER DISABILITIES. INTERIOR ACCESSIBLE ROUTES MAY INCLUDE CORRIDORS, HALLWAYS, FLOORS, RAMPS, ELEVATORS, AND LIFTS. EXTERIOR ACCESSIBLE ROUTES MAY INCLUDE PARKING ACCESS AISLES, CURB RAMPS, CROSSWALKS AT VEHICULAR WAYS, WALKS, RAMPS AND LIFTS. INTERIOR AND EXTERIOR ACCESSIBLE ROUTES SHALL COMPLY WITH CBC CHAPTER 11B. ACCESSIBLE ROUTES, COMMON PATH OF TRAVEL ITEMS INCLUDE: DRINKING FOUNTAINS SERVING THE AREA OF ALTERATION, PUBLIC TELEPHONES SERVING THE AREA OF ALTERATION, EXTERIOR OR INTERIOR SIGNS ALONG THE PATH OF TRAVEL, ACCESSIBLE ROUTE COMPONENTS, WALKING SURFACES DIMENSIONS, RUNNING SLOPE OF WALKING SURFACE ARE NOT TO EXCEED 1:20 SLOPE, RUNNING SLOPE OF RAMPS ARE NOT TO EXCEED 1:12 SLOPE, CROSS SLOPE OF WALKS, RAMPS AND LANDINGS ARE NOT TO EXCEED 1:48, VERTICAL CHANGES IN LEVEL ARE NOT TO EXCEED 1/4", OPENING IN DRAINS AND GRATINGS ARE NOT TO EXCEED 1/2" IN PREDOMINANT DIRECTION OF TRAVEL, PROTRUDING OBJECTS AND OVERHEAD OBSTRUCTIONS ARE TO HAVE 80" MINIMUM HEAD CLEARANCE AND ARE NOT TO PROJECT MORE THAN 4" FROM WALLS WITHIN A 27" AND 80" RANGE, SITE ARRIVAL POINTS, PARKING LOTS, BUS STOPS, PASSENGER DROP-OFF AND LOADING ZONES.

DESIGN PROFESSIONAL IN CHARGE STATEMENT:

- THE P.O.T. IDENTIFIED IN THESE CONSTRUCTION DOCUMENTS MEETS THE REQUIREMENTS OF THE CURRENT APPLICABLE CALIFORNIA BUILDING CODE (CBC) ACCESSIBILITY PROVISIONS FOR PATH OF TRAVEL REQUIREMENTS FOR ALTERATIONS, ADDITIONS AND STRUCTURAL REPAIRS.
- AS PART OF THE DESIGN OF THIS PROJECT, THE P.O.T. WAS EXAMINED AND ANY ELEMENTS, COMPONENTS, OR PORTIONS OF THE P.O.T. THAT WERE DETERMINED TO BE NONCOMPLIANT WITH THE CBC HAVE BEEN IDENTIFIED AND THE CORRECTIVE WORK NECESSARY TO BRING THEM INTO COMPLIANCE HAS BEEN INCLUDED WITHIN THE SCOPE OF THIS PROJECT'S WORK THROUGH DETAILS, DRAWINGS, AND SPECIFICATIONS INCORPORATED INTO THESE CONSTRUCTION DOCUMENTS.
- ANY NONCOMPLIANT ELEMENTS, COMPONENTS OR PORTIONS OF THE P.O.T. THAT WILL NOT BE CORRECTED BY THIS PROJECT BASED ON VALUATION THRESHOLD LIMITATIONS OR A FINDING OF UNREASONABLE HARDSHIP ARE INDICATED IN THESE CONSTRUCTION DOCUMENTS.
- DURING CONSTRUCTION, IF P.O.T. ITEMS WITHIN THE SCOPE OF THE PROJECT REPRESENTED AS CBC COMPLIANT ARE FOUND TO BE NONCONFORMING BEYOND REASONABLE CONSTRUCTION TOLERANCES, THEY ITEMS SHALL BE BROUGHT INTO COMPLIANCE WITH THE CBC AS A PART OF THIS PROJECT BY MEANS OF A CONSTRUCTION CHANGE DOCUMENT.
- ITS ADVISABLE TO AVOID DESIGN REQUIREMENTS THAT ARE AT OR NEAR DIMENSIONAL THRESHOLDS. CONSTRUCTION TOLERANCES MAY BE USED WHEN EVALUATING THE COMPLIANCE OF EXISTING PATH OF TRAVEL ELEMENTS PER DSA IR 11B-8 'USE OF PREDETERMINED CONSTRUCTION TOLERANCE GUIDELINES FOR ACCESSIBILITY

LEGEND

A. THE CONTRACTOR SHALL ACCEPT THE SITE IN ITS PRESENT CONDITION & DEMOLISH AND/OR REMOVE FROM THE AREA OF THE PROJECT ALL STRUCTURES, BOTH SURFACE & SUBSURFACE, TREES, BRUSH, ROOTS, DEBRIS, ORGANIC MATTER, & ALL OTHER MATTER DETERMINED BY THE INSPECTOR TO BE DETRIMENTAL. SUCH MATERIAL SHALL BE REMOVED FROM THE SITE BY THE CONTRACTOR.
B. EXCAVATIONS SHALL BE ADEQUATELY SHORED, BRACED & SHEETED SO THAT THE EARTH WILL NOT SLIDE OR SETTLE & SO THAT ALL EXISTING IMPROVEMENTS OF ANY KIND WILL BE FULLY PROTECTED FROM DAMAGE. WHERE THE EXCAVATION FOR A CONDUIT TRENCH, AND/OR STRUCTURE IS FIVE FEET OR MORE IN DEPTH, THE CONTRACTOR SHALL PROVIDE ADEQUATE SHEETING, WHICH SHALL CONFORM TO THE APPLICABLE CONSTRUCTION SAFETY ORDERS OF THE DIVISION OF INDUSTRIAL SAFETY OF THE STATE OF CALIFORNIA. THE CONTRACTOR SHALL ALWAYS COMPLY WITH OSHA REQUIREMENTS.
C. FINISH GRADE SHALL HAVE A 1.5% SLOPE AWAY FROM THE BLDG. FOR A DISTANCE NOT LESS THAN 5'-0" FROM THE BLDG.
D. UPON COMPLETION OF CONSTRUCTION, THE LOCAL FIRE DEPARTMENT AND/OR EMERGENCY COMMUNICATIONS AUTHORITY WILL BE CONTACTED TO OBTAIN DESIGN & EQUIPMENT SPECIFICATIONS, AND TESTING AND ACEPTANCE CRITERIA FOR EMERGENCY RESPONDER RADIO COVERAGE (ERRC) PER CFC 510. UPON COMPLETION COPIES OF THE APPROVED PLANS, EQUIPMENT DATA SHEETS AND PROOF OF TESTING AND ACCEPTANCE DOCUMENTATION SHALL BE PROVIDED TO THE SCHOOL DISTRICT.
E. EXTERIOR CONC. LANDINGS AT DOORS SHALL NOT BE MORE THAN 1/2 INCH LOWER THAN DOORWAY THRESHOLD WITH 1/4 INCH PER FOOT SLOPE MAX.
F. ALL DIMENSIONS SHALL BE FIELD VERIFIED PRIOR TO CONSTRUCTION.
G. REFER TO CIVIL, AQUATICS, STRUCTURAL, LANDSCAPE, PLUMBING & ELECTRICAL FOR ADDITIONAL INFORMATION. CONTRACTOR TO COORDINATE ALL TRADES TO MAINTAIN PROPER CLEARANCES & AVOID CONFLICTS.
H. PROTECT EXISTING IMPROVEMENTS TO REMAIN.

GENERAL NOTES

AGD ARCHITECTURE | DESIGN

ANDREW GOODWIN DESIGNS
1238 MONTEREY STREET
SAN LUIS OBISPO, CA 93422
t: (805) 439-1611
www.andrewgoodwin.us

These drawings are instruments of service and are the property of Andrew Goodwin Designs, Inc. The information represented on these drawings are exclusively for the project indicated and shall not be transferred or otherwise reproduced without express written permission of Andrew Goodwin. Copyright 2025

REVISIONS

REV # | REV DATE | REV DESCRIPTION

SEAL

LICENSED ARCHITECT ANTONIO PAVONES NOT FOR CONSTRUCTION Exp. 09/30/2025 STATE OF CALIFORNIA

PROJECT

TRANQUILLITY HIGH SCHOOL
INCREMENT 1 AQUATIC CENTER MODERNIZATION
6052 Juanche Ave,
Tranquillity, CA 93668

CLIENT

GOLDEN PLAINS UNIFIED SCHOOL DISTRICT

SHEET TITLE

PROPOSED OVERALL SITE PLAN

PHASE DESCRIPTION
100% CD FCHD APPROVAL
SWIMMING POOL

DATE: 8/26/2025

TECHNICIAN: RT / JL

PROJECT MANAGER: TP

JOB NUMBER: 791

SHEET NUMBER
A1.00-1

PLOT DATE: 8/13/2025 3:22:30 PM

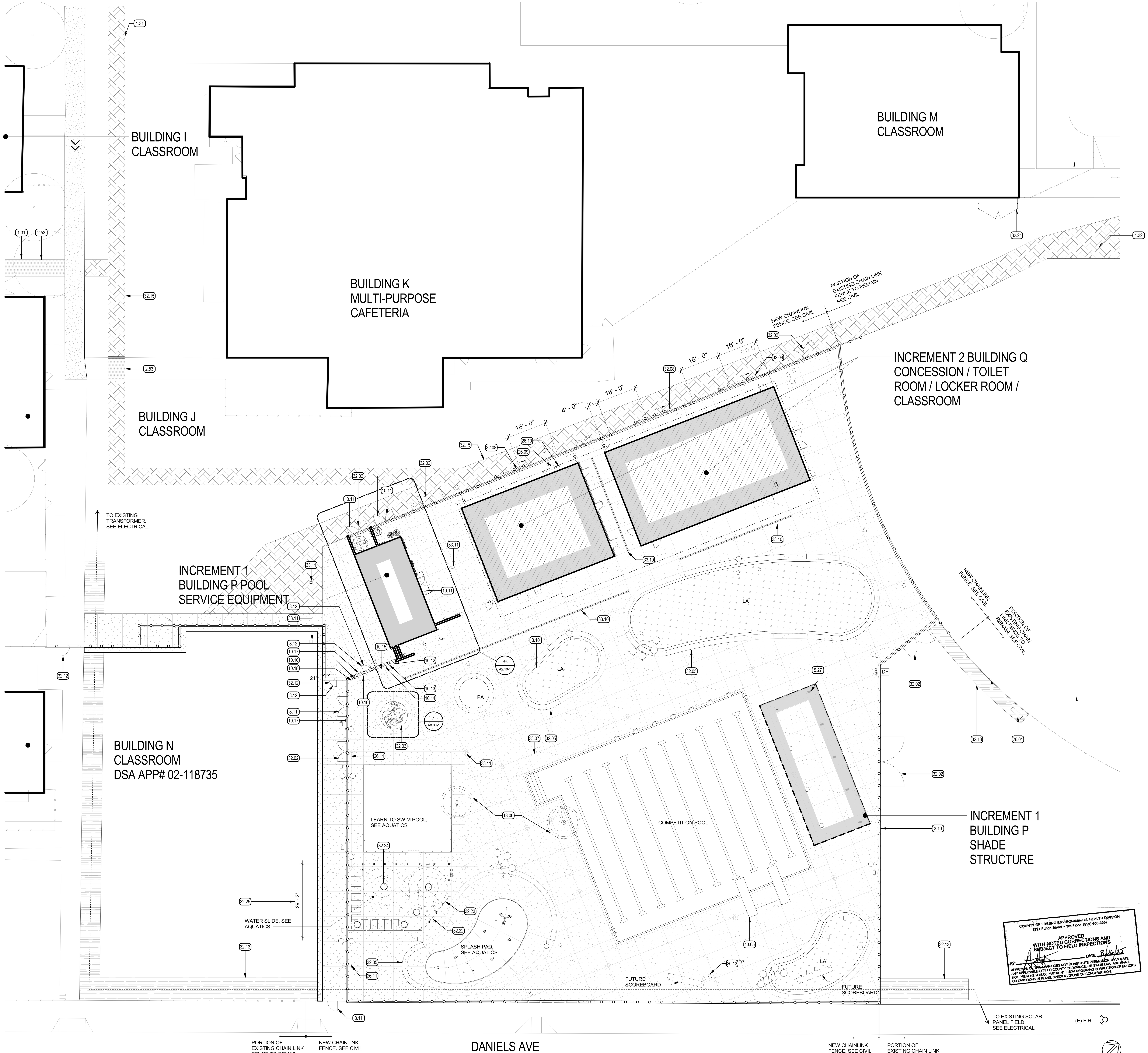

1 **ENLARGED PROPOSED SITE PLAN**

1" = 15'-0"

1.31 SEE SHEET A1.00-1 AND ELECTRICAL FOR CONTINUATION.
1.32 SEE SHEET A1.00-1 AND CIVIL FOR CONTINUATION.
2.53 PATCH EXISTING CONCRETE TO MATCH EXISTING ADJACENT CONDITIONS.
3.10 CONCRETE MOW STRIP, SEE CIVIL, TYP.
5.27 SHADE STRUCTURE COLUMN, SEE MANUFACTURERS DRAWINGS.
8.11 ACCESSIBLE CHAINLINK GATE, SEE CIVIL.
8.12 PROVIDE PANIC HARDWARE, SEE CIVIL.
10.10 POOL USER CAPACITY SIGNAGE. SEE AQUATICS.
10.11 CHEMICAL HAZARD SIGNAGE. SEE AQUATICS.
10.12 EMERGENCY TELEPHONE NUMBER. SEE AQUATICS.
10.13 ILLUSTRATED CPR DIAGRAM SIGNAGE. SEE AQUATICS.
10.14 NO LIFEGUARD WARNING SIGNAGE. SEE AQUATICS.
10.15 NO DIVING SIGNAGE. SEE AQUATICS.
10.16 KEEP CLOSED SIGNAGE. SEE AQUATICS.
10.17 DIARRHEA SIGNAGE. SEE AQUATICS.
10.18 FIRE DEPARTMENT SIGNAGE. SEE AQUATICS.
13.05 DIVING PLATFORMS. SEE AQUATICS
13.06 ACCESSIBLE LIFT. SEE AQUATICS
26.01 PRE-CHECKED SCOREBOARD. SEE SCOREBOARD MANUFACTURER AND ELECTRICAL.
26.09 TRANSFORMER, SEE ELECTRICAL.
26.10 PANEL, SEE ELECTRICAL, TYP.
26.11 SELF-ILLUMINATING EXIT SIGN, SEE ELECTRICAL.
26.13 PULL BOX, SEE ELECTRICAL.
32.02 DOUBLE CHAIN LINK GATE, SEE CIVIL
32.03 TIGER LOGO PAINTED ONTO CONCRETE. SEE DETAIL. 7 / A8.00-1
32.05 CONCRETE BENCH. SEE DETAIL 3 / A8.00-1 & 2 / A8.00-1
32.08 SLIDING CHAIN LINK GATE. SEE CIVIL
32.12 ACCESSIBLE CHAIN LINK GATE. SEE CIVIL.
32.13 RECOMPACT SOIL AND REPAIR LANDSCAPE/IRRIGATION TO MATCH EXISTING ADJACENT CONDITIONS, SEE LANDSCAPE
32.15 RECOMPACT SOIL AND GRAVEL PAVEMENT TO MATCH EXISTING ADJACENT CONDITIONS. SEE LANDSCAPE
32.21 CHAIN LINK FENCING & GATES, SEE CIVIL
32.22 DECORATIVE METAL GATE, SEE CIVIL.
32.23 DECORATIVE METAL FENCE, SEE CIVIL.
32.24 SLIDE STRUCTURAL COLUMN.
32.25 SECTION TALL CHAINLINK FENCING, SEE CIVIL.
33.07 SLOT DRAIN. SEE AQUATICS
33.10 TRENCH DRAINS. SEE CIVIL.
33.11 DRAIN INLET, SEE AQUATICS AND CIVIL, TYP.

KEYNOTES (XX.XX)

SITE CONCRETE, SEE CIVIL & AQUATICS
PROPOSED PRE-MANUFACTURED SHADE STRUCTURE. SEE MANUFACTURES DRAWINGS
EXISTING BUILDING NOT INCLUDED IN SCOPE OF WORK
PROPOSED BUILDING P (INCREMENT 1)
PROPOSED BUILDING Q (INCREMENT 2)
LA — LANDSCAPE AREA, SEE LANDSCAPE
XXX — ROOM IDENTIFICATION SIGNAGE, SEE 6 / A8.00-1
CHAIN LINK FENCE WITH CLIMB RESISTANT FENCE FABRIC. SEE CIVIL
6'-0" TALL DECORATIVE METAL FENCE
LIGHT POLE, SEE ELECTRICAL
SURFACE MOUNTED LIGHT FIXTURE AT SHADE STRUCTURE, SEE ELECTRICAL
(E)F.H. — FIRE HYDRANT, SEE CIVIL.
PA — PLANTER AREA, SEE LANDSCAPE.
ACCESSIBLE ROUTE (2022 C.B.C. SECTION 11B - 206)
G — ACCESSIBLE GENDER NEUTRAL STUDENT TOILET DSA APPLICATION NUMBER 02-118735
S — ACCESSIBLE GENDER NEUTRAL STAFF TOILET ROOM DSA APPLICATION NUMBER 02-118735
DF — ACCESSIBLE DRINKING FOUNTAIN. THIS DSA APPLICATION NUMBER AS PART OF INCREMENT 1
M2 — ACCESSIBLE MENS TOILET ROOM. THIS DSA APPLICATION NUMBER AS PART OF INCREMENT 2
W2 — ACCESSIBLE WOMENS TOILET ROOM. THIS DSA APPLICATION NUMBER AS PART OF INCREMENT 2
S2 — ACCESSIBLE GENDER NEUTRAL STAFF TOILET ROOM THIS DSA APPLICATION NUMBER AS PART OF INCREMENT 2

THE ACCESSIBLE ROUTE, AS DEFINED IN THE CALIFORNIA BUILDING CODE, IS A CONTINUOUS UNOBSTRUCTED PATH CONNECTING ACCESSIBLE ELEMENTS AND SPACES OF AN ACCESSIBLE SITE, BUILDING OR FACILITY THAT CAN BE NEGOTIATED BY A PERSON WITH A DISABILITY USING A WHEELCHAIR, AND THAT IS ALSO SAFE FOR AND USABLE BY PERSONS WITH OTHER DISABILITIES. INTERIOR ACCESSIBLE ROUTES MAY INCLUDE CORRIDORS, HALLWAYS, FLOORS, RAMPS, ELEVATORS, AND LIFTS. EXTERIOR ACCESSIBLE ROUTES MAY INCLUDE PARKING ACCESS AISLES, CURB RAMPS, CROSSWALKS AT VEHICULAR WAYS, WALKS, RAMPS AND LIFTS. INTERIOR AND EXTERIOR ACCESSIBLE ROUTES SHALL COMPLY WITH CBC CHAPTER 11B: ACCESSIBLE ROUTES. COMMON PATH OF TRAVEL ITEMS INCLUDE: DRINKING FOUNTAINS SERVING THE AREA OF ALTERATION, PUBLIC TELEPHONES SERVING THE AREA OF ALTERATION, EXTERIOR OR INTERIOR SIGNS ALONG THE PATH OF TRAVEL, ACCESSIBLE ROUTE COMPONENTS, WALKING SURFACES DIMENSIONS, RUNNING SLOPE OF WALKING SURFACE ARE NOT TO EXCEED 1:20 SLOPE, RUNNING SLOPE OF RAMPS ARE NOT TO EXCEED 1:12 SLOPE, CROSS SLOPE OF WALKS, RAMPS AND LANDINGS ARE NOT TO EXCEED 1:48, VERTICAL CHANGES IN LEVEL ARE NOT TO EXCEED 1/4", OPENING IN DRAINS AND GRATINGS ARE NOT TO EXCEED 1/2" IN PREDOMINANT DIRECTION OF TRAVEL, PROTRUDING OBJECTS AND OVERHEAD OBSTRUCTIONS ARE TO HAVE 80" MINIMUM HEAD CLEARANCE AND ARE NOT TO PROJECT MORE THAN 4" FROM WALLS WITHIN A 27" AND 80" RANGE, SITE ARRIVAL POINTS, PARKING LOTS, BUS STOPS, PASSENGER DROP-OFF AND LOADING ZONES.

DESIGN PROFESSIONAL IN CHARGE STATEMENT:

- THE P.O.T. IDENTIFIED IN THESE CONSTRUCTION DOCUMENTS MEETS THE REQUIREMENTS OF THE CURRENT APPLICABLE CALIFORNIA BUILDING CODE (CBC) ACCESSIBILITY PROVISIONS FOR PATH OF TRAVEL REQUIREMENTS FOR ALTERATIONS, ADDITIONS AND STRUCTURAL REPAIRS.
- AS PART OF THE DESIGN OF THIS PROJECT, THE P.O.T. WAS EXAMINED AND ANY ELEMENTS, COMPONENTS, OR PORTIONS OF THE P.O.T. THAT WERE DETERMINED TO BE NONCOMPLIANT WITH THE CBC HAVE BEEN IDENTIFIED AND THE CORRECTIVE WORK NECESSARY TO BRING THEM INTO COMPLIANCE HAS BEEN INCLUDED WITHIN THE SCOPE OF THIS PROJECT'S WORK THROUGH DETAILS, DRAWINGS, AND SPECIFICATIONS INCORPORATED INTO THESE CONSTRUCTION DOCUMENTS.
- ANY NONCOMPLIANT ELEMENTS, COMPONENTS OR PORTIONS OF THE P.O.T. THAT WILL NOT BE CORRECTED BY THIS PROJECT BASED ON VALUATION THRESHOLD LIMITATIONS OR A FINDING OF UNREASONABLE HARDSHIP ARE INDICATED IN THESE CONSTRUCTION DOCUMENTS.
- DURING CONSTRUCTION, IF P.O.T. ITEMS WITHIN THE SCOPE OF THE PROJECT REPRESENTED AS CBC COMPLIANT ARE FOUND TO BE NONCONFORMING BEYOND REASONABLE CONSTRUCTION TOLERANCES, THEY ITEMS SHALL BE BROUGHT INTO COMPLIANCE WITH THE CBC AS A PART OF THIS PROJECT BY MEANS OF A CONSTRUCTION CHANGE DOCUMENT.
- ITS ADVISABLE TO AVOID DESIGN REQUIREMENTS THAT ARE AT OR NEAR DIMENSIONAL THRESHOLDS. CONSTRUCTION TOLERANCES MAY BE USED WHEN EVALUATING THE COMPLIANCE OF EXISTING PATH OF TRAVEL ELEMENTS PER DSA IR 11B-8 'USE OF PREDETERMINED CONSTRUCTION TOLERANCE GUIDELINES FOR ACCESSIBILITY

LEGEND

A. THE CONTRACTOR SHALL ACCEPT THE SITE IN ITS PRESENT CONDITION & DEMOLISH AND/OR REMOVE FROM THE AREA OF THE PROJECT ALL STRUCTURES, BOTH SURFACE & SUBSURFACE, TREES, BRUSH, ROOTS, DEBRIS, ORGANIC MATTER, & ALL OTHER MATTER DETERMINED BY THE INSPECTOR TO BE DETRIMENTAL. SUCH MATERIAL SHALL BE REMOVED FROM THE SITE BY THE CONTRACTOR.
B. EXCAVATIONS SHALL BE ADEQUATELY SHORED, BRACED & SHEETED SO THAT THE EARTH WILL NOT SLIDE OR SETTLE & SO THAT ALL EXISTING IMPROVEMENTS OF ANY KIND WILL BE FULLY PROTECTED FROM DAMAGE. WHERE THE EXCAVATION FOR A CONDUIT TRENCH, AND/OR STRUCTURE IS FIVE FEET OR MORE IN DEPTH, THE CONTRACTOR SHALL PROVIDE ADEQUATE SHEETING, WHICH SHALL CONFORM TO THE APPLICABLE CONSTRUCTION SAFETY ORDERS OF THE DIVISION OF INDUSTRIAL SAFETY OF THE STATE OF CALIFORNIA. THE CONTRACTOR SHALL ALWAYS COMPLY WITH OSHA REQUIREMENTS.
C. FINISH GRADE SHALL HAVE A 1.5% SLOPE AWAY FROM THE BLDG. FOR A DISTANCE NOT LESS THAN 5'-0" FROM THE BLDG.
D. UPON COMPLETION OF CONSTRUCTION, THE LOCAL FIRE DEPARTMENT AND/OR EMERGENCY COMMUNICATIONS AUTHORITY WILL BE CONTACTED TO OBTAIN DESIGN & EQUIPMENT SPECIFICATIONS, AND TESTING AND ACEPTANCE CRITERIA FOR EMERGENCY RESPONDER RADIO COVERAGE (ERRC) PER CFC 510. UPON COMPLETION COPIES OF THE APPROVED PLANS, EQUIPMENT DATA SHEETS AND PROOF OF TESTING AND ACCEPTANCE DOCUMENTATION SHALL BE PROVIDED TO THE SCHOOL DISTRICT.
E. EXTERIOR CONC. LANDINGS AT DOORS SHALL NOT BE MORE THAN 1/2 INCH LOWER THAN DOORWAY THRESHOLD WITH 1/4 INCH PER FOOT SLOPE MAX.
F. SEE CIVIL FOR A.C. & CONC. PAVING SECTIONS, AND CURB DETAILS.
G. REFER TO CIVIL, AQUATICS, STRUCTURAL, LANDSCAPE, PLUMBING & ELECTRICAL FOR UTILITY INFORMATION. CONTRACTOR TO COORDINATE ALL TRADES TO MAINTAIN PROPER CLEARANCES & AVOID CONFLICTS.
H. FOR SCORELINE AND CONCRETE BENCH DIMENSIONING SEE SHEETS A1.12-1, A1.13-1, A1.14-1, A1.15-1 & A1.16-1
I. ALL DIMENSIONS SHALL BE FIELD VERIFIED PRIOR TO CONSTRUCTION.
J. PROTECT EXISTING IMPROVEMENTS TO REMAIN

GENERAL NOTES

AGD
ARCHITECTURE | DESIGN

ANDREW GOODWIN DESIGNS
1238 MONTEREY STREET
SAN LUIS OBISPO, CA 93422
t: (805) 439-1611
www.andrewgoodwin.us

These drawings are instruments of service and are the property of Andrew Goodwin Designs, Inc. The information represented on these drawings are exclusively for the project indicated and shall not be transferred or otherwise reproduced without express written permission of Andrew Goodwin.
Copyright 2025

REVISIONS

REV #	REV DATE	REV DESCRIPTION

SEAL

LICENSED ARCHITECT
ANTONIO PAVONE
C-3...
REN. 9/30/2025
STATE OF CALIFORNIA
NOT FOR CONSTRUCTION

PROJECT

TRANQUILLITY HIGH SCHOOL
INCREMENT 1 AQUATIC CENTER MODERNIZATION
6052 Juanche Ave,
Tranquillity, CA 93668

CLIENT

GOLDEN PLAINS UNIFIED SCHOOL DISTRICT

SHEET TITLE

ENLARGED PROPOSED SITE PLAN

PHASE DESCRIPTION
100% CD FCHD APPROVAL SWIMMING POOL

DATE: 8/26/2025
TECHNICIAN: RT / JL
PROJECT MANAGER: TP
JOB NUMBER: 791
SHEET NUMBER
A1.11-1

PLOT DATE: 8/13/2025 3:22:41 PM

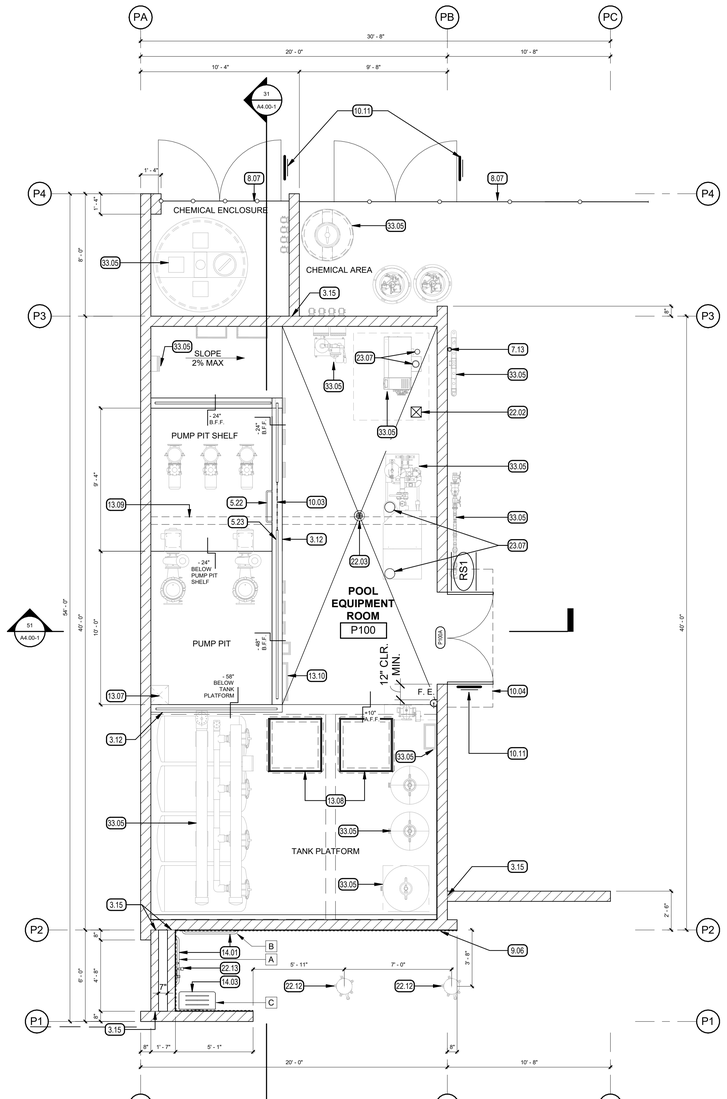

44 BUILDING P - FLOOR PLAN

1/4" = 1'-0"

PN

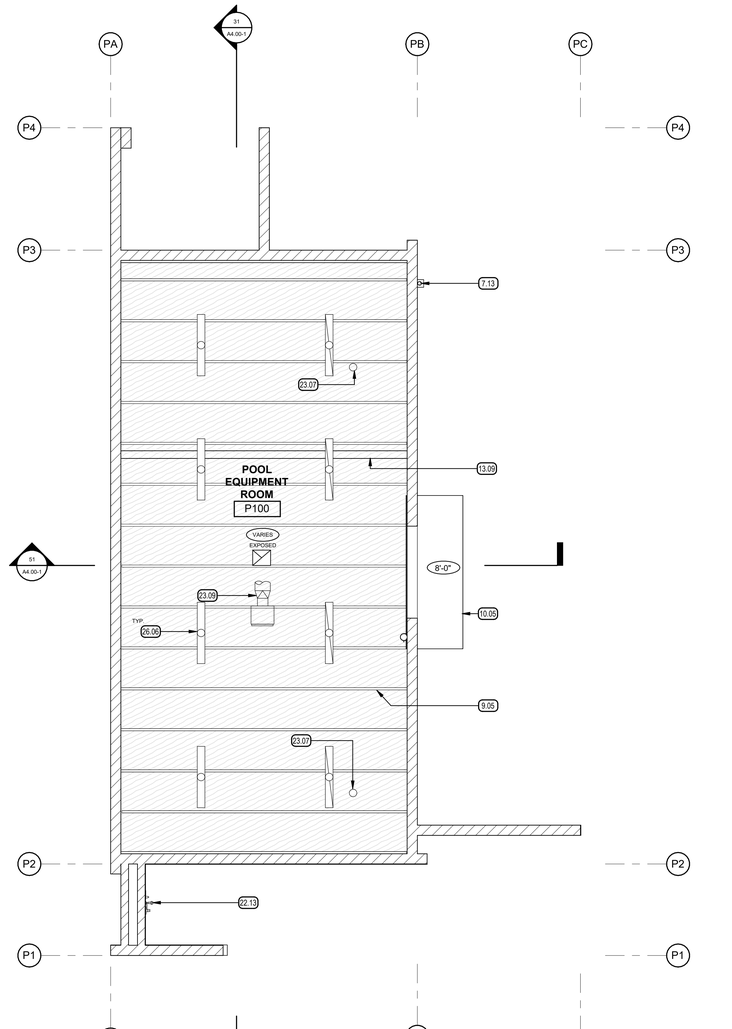

34 BUILDING P - REFLECTED CEILING PLAN

1/4" = 1'-0"

PN

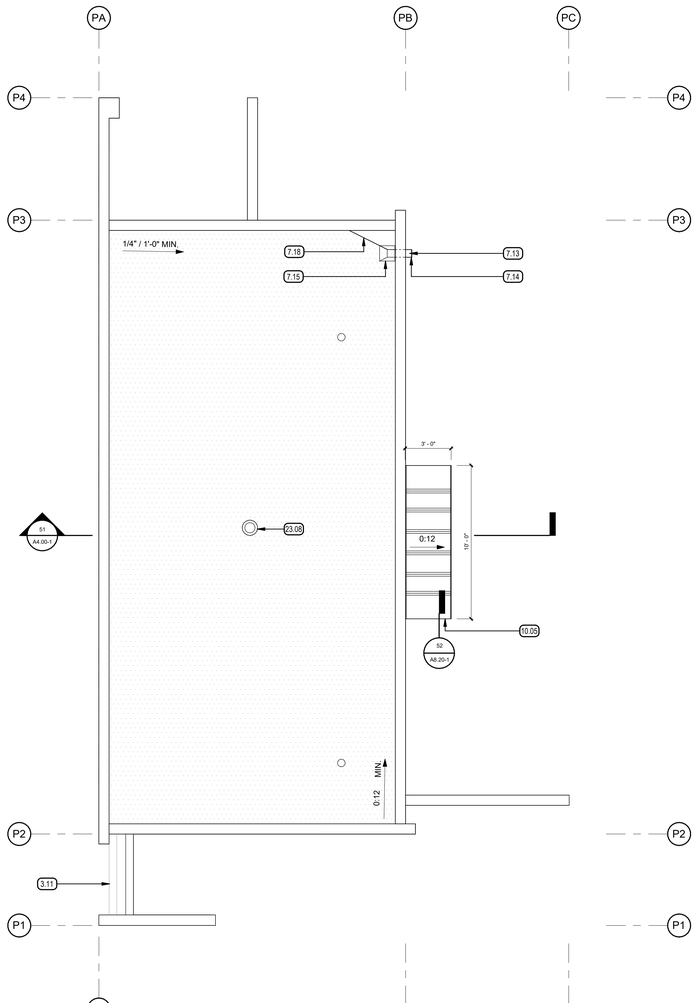

24 BUILDING P - ROOF PLAN

1/4" = 1'-0"

PN

KEYNOTES (XX.XX)

3.11 CONTINUOUS PRE-CAST CONCRETE WALL CAP, SEE42 / A8.20-1 ,43 / A8.20-1 AND 61 / A8.20-1
3.12 6" CONCRETE CURB, SEE STRUCTURAL
3.15 PROVIDE 1/2" ISOLATION JOINT AT ADJOINING CMU WALL, SEE STRUCTURAL.
5.22 METAL LADDER RUNG TYP. OF (2), SEE STRUCTURAL REFERENCE DETAIL 63/S4.00-1
5.23 GALVANIZED METAL GUARDRAIL, PAINTED, SEE INTERIOR ELEVATIONS AND STRUCTURAL
7.13 3" DIA. GALVANIZED METAL DOWNSPOUT, TIE INTO STORM DRAIN SYSTEM, SEE 35 / A8.20-1
7.14 RAIN LEADER CONDUCTOR HEAD, SEE SHEET 35 / A8.20-1
7.15 SCUPPER SUMP, SEE 25 / A8.20-1
7.18 RIGID INSULATION FORMED FOR CRICKET.
8.07 CHAIN LINK FENCING & GATES, SEE CIVIL
9.05 ROOF FRAMING, SEE STRUCTURAL
9.06 THIN SET CERAMIC WALL TILE.
10.03 VINYL COATED METAL CHAIN LINK ACCESS WITH SPRING SNAP HOOK
10.04 CANOPY ABOVE, SEE ROOF PLAN
10.05 1/2" THK. GALVANIZED METAL PLATE CANOPY CENTERED OVER DOORS, SEE 41 / A8.20-1 AND STRUCTURAL.
10.11 CHEMICAL HAZARD SIGNAGE. SEE AQUATICS.
13.07 SUMP PIT -5'-0" A.F.F BELOW TOP OF TANK PLATFORM, SEE AQUATICS AND STRUCTURAL.
13.08 SURGE TANK ACCESS HATCH, SEE AQUATICS.
13.09 STEEL HOIST BEAM ABOVE.SEE STRUCTURAL.
13.10 EQUIPMENT MOUNTED TO GUARDRAIL, SEE AQUATICS AND STRUCTURAL
14.01 GRAB BAR, SEE ACCESSORY SCHEDULE AND4 / A8.00-1
14.03 ACCESSIBLE SHOWER SEAT, SEE ACCESSORY SCHEDULE AND1 / A8.00-1
22.02 FLOOR SINK. SEE PLUMBING.
22.03 FLOOR DRAIN. SEE PLUMBING.
22.12 FREE STANDING SHOWER, SEE PLUMBING.
22.13 SHOWER SPRAY UNIT WITH A MIN. 59" LONG HOSE.
23.07 VENT THRU ROOF, SEE PLUMBING.
23.08 EXHAUST VENT CAP, SEE MECHANICAL
23.09 EXHAUST EQUIPMENT, SEE MECHANICAL
26.06 LIGHT. SEE ELECTRICAL
33.05 POOL SERVICE EQUIPMENT. SEE AQUATICS

LEGEND

CMU WALL, SEE STRUCTURAL

FULLY ADHERED SINGLE PLY ROOF SYSTEM OVER 1/2" COVER BOARD, OVER 6" RIGID INSULATION, OVER ROOF DECK..

EXPOSED PLYWOOD DECK, SEE STRUCTURAL

EXHAUST FAN, SEE MECHANICAL

XXX ROOM IDENTIFICATION SIGNAGE, SEE 6 / A8.00-1

F.E. 2A:10B:C BRACKET MOUNTED FIRE EXTINGUISHER, SEE 9 / A8.00-1

ACCESSORY SCHEDULE

MARK	DESCRIPTION	MFR.	MODEL NO.	REMARKS
A	GRAB BAR, REAR	BOBRICK	B-6806 SERIES	36" LONG
B	GRAB BAR, SIDE	BOBRICK	B-6806 SERIES	42" LONG
C	SHOWER SEAT	BOBRICK	B-5193	SURFACE MTD.

GENERAL NOTES

A. REFER TO CIVIL, LANDSCAPE, STRUCTURAL, MECHANICAL, ELECTRICAL, PLUMBING, AND AQUATICS FOR ADDITIONAL INFORMATION.
B. ALL DIMENSIONS SHALL BE FIELD VERIFIED PRIOR TO CONSTRUCTION.
C. SLOPE CONCRETE SLAB TO FLOOR DRAIN, 1 1/2% MAX. SLOPE.
H. THE CONTRACTOR IS TO MAINTAIN BUILDING IN A WEATHER-TIGHT CONDITION AGAINST INCLEMENT WEATHER AT ALL TIMES.

COUNTY OF FRESNO ENVIRONMENTAL HEALTH DIVISION
1221 Fulton Street – 3rd Floor (559) 600-3357
APPROVED
WITH NOTED CORRECTIONS AND
SUBJECT TO FIELD INSPECTIONS
BY: DATE: 8/26/25
APPROVAL OF THIS PLAN DOES NOT CONSTITUTE PERMISSION TO VIOLATE ANY APPLICABLE CITY OR COUNTY ORDINANCE, OR STATE LAW, AND SHALL NOT PREVENT THIS DEPARTMENT FROM REQUIRING CORRECTION OF ERRORS OR OMISSIONS IN PLANS, SPECIFICATIONS OR CONSTRUCTION.

AGD
ARCHITECTURE | DESIGN

ANDREW GOODWIN DESIGNS
1238 MONTEREY STREET
SAN LUIS OBISPO, CA 93422
t: (805) 439-1611
www.andrewgoodwin.us

These drawings are instruments of service and are the property of Andrew Goodwin Designs, Inc. The information represented on these drawings are exclusively for the project indicated and shall not be transferred or otherwise reproduced without express written permission of Andrew Goodwin. Copyright 2025

REVISIONS

REV # | REV DATE | REV DESCRIPTION

SEAL

LICENSED ARCHITECT
ANTONIO PAVONE
C-36
Exp. 12/31/2025
STATE OF CALIFORNIA
NOT FOR CONSTRUCTION

PROJECT

TRANQUILLITY HIGH SCHOOL
INCREMENT 1 AQUATIC CENTER MODERNIZATION
6052 Juanche Ave,
Tranquillity, CA 93668

CLIENT

GOLDEN PLAINS UNIFIED SCHOOL DISTRICT

SHEET TITLE

BUILDING P - PROPOSED FLOOR PLAN, RCP, & ROOF PLAN

PHASE DESCRIPTION
100% CD FCHD APPROVAL
SWIMMING POOL

DATE: 8/26/2025

TECHNICIAN: RT / JL

PROJECT MANAGER: TP

JOB NUMBER: 791

SHEET NUMBER
A2.10-1

PLOT DATE: 8/13/2025 3:23:01 PM

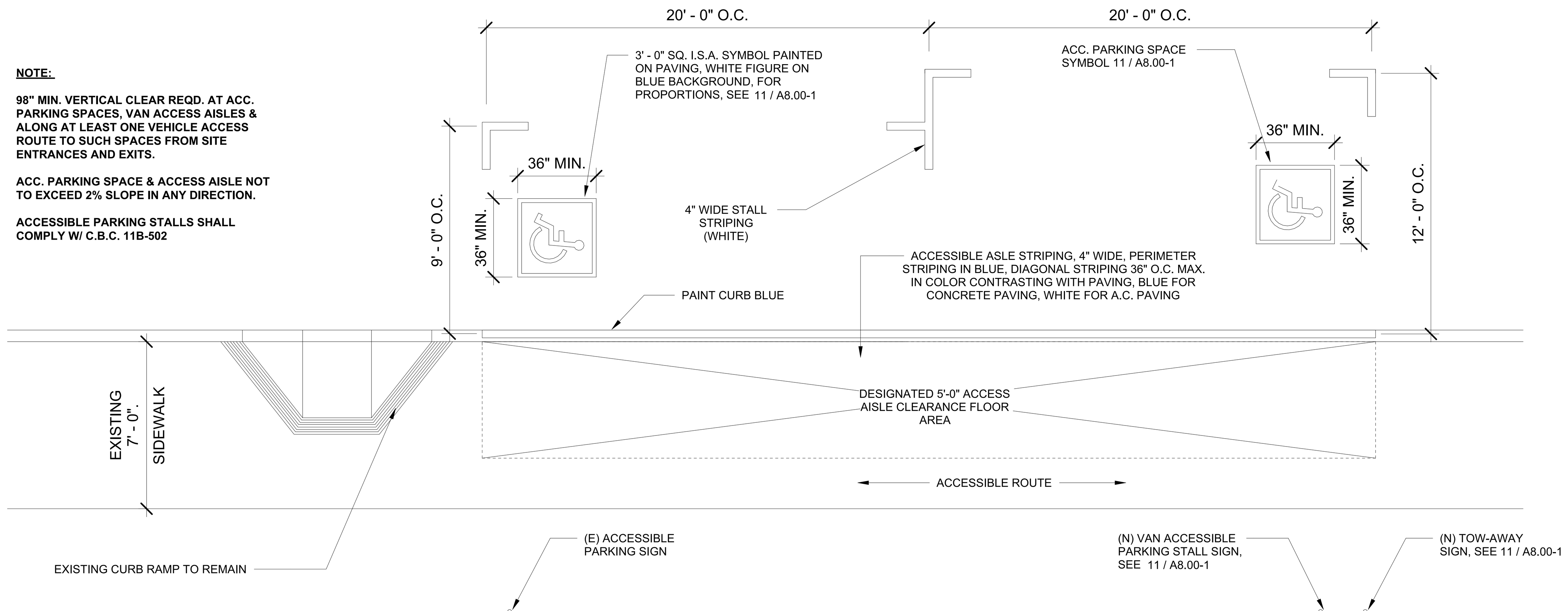

NOTE:

98" MIN. VERTICAL CLEAR REQD. AT ACC. PARKING SPACES, VAN ACCESS AISLES & ALONG AT LEAST ONE VEHICLE ACCESS ROUTE TO SUCH SPACES FROM SITE ENTRANCES AND EXITS.

ACC. PARKING SPACE & ACCESS AISLE NOT TO EXCEED 2% SLOPE IN ANY DIRECTION.

ACCESSIBLE PARKING STALLS SHALL COMPLY W/ C.B.C. 11B-502

12 ACCESSIBLE PARKING STALL

3" = 1'-0"

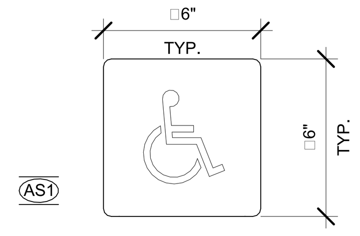

NOTE:

1. ALL BLDG. ENTRANCES THAT ARE ACCESSIBLE TO & USABLE BY PHYSICALLY DISABLED PERSONS SHALL BE IDENTIFIED WITH AT LEAST ONE STANDARD SIGN & ADDITIONAL DIRECTIONAL SIGNS AS REQUIRED TO BE VISIBLE TO PERSONS ALONE APPROACHING PEDESTRIAN WAYS.
2. CHARACTERS & SYMBOLS SHALL CONTRAST WITH THEIR BACKGROUND, EITHER LIGHT CHARACTERS ON A DARK BACKGROUND OR DARK CHARACTERS ON A LIGHT BACKGROUND.
3. ALL MECHANICAL ATTACHMENTS TO BE CONCEALED
4. SYMBOL SHALL COMPLY WITH 11B-703.7.2.1
5. PROVIDE 16 GAUGE METAL BACKING PLATE TO MATCH SAME DIMENSIONS AS SIGNAGE. SANDWICH CHAINLINK TOGETHER WITH TAMPER RESISTANT THRU BOLTS SIMILAR TO DETAIL [E/CX1.03]

8 ACCESSIBLE SIGNAGE

1 1/2" = 1'-0"

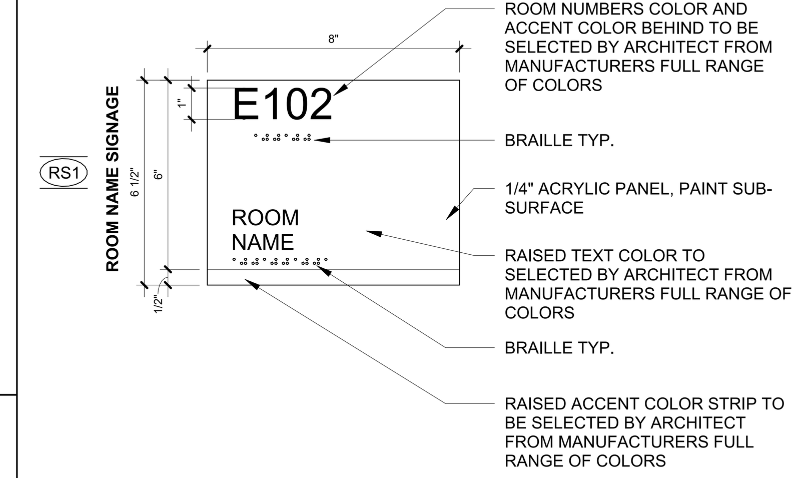

NOTE:

1. REFER TO 6 / A8.00-1 FOR TYPICAL HEIGHT AND LOCATION REQUIREMENTS
2. COORDINATE ROOM NAME AND NUMBER WITH OWNER PRIOR TO FABRICATION. DO NOT USE IDENTIFICATION FOUND ON THE DRAWINGS, U.N.O.
3. RAISED TEXT CHARACTERS SHALL COMPLY WITH CBC 11B-703.2 AND SHALL BE DUPLICATED IN BRAILLE COMPLYING WITH CBC 11B-703.3
4. BRAILLE DOTS SHALL HAVE A DOMED OR ROUNDED SHAPE AND SHALL COMPLY WITH CBC TABLE 703.3.1
5. CHARACTERS AND SYMBOLS SHALL CONTRAST WITH THEIR BACKGROUND PER CBC 11B-703.7.2.1

5 TYP. ROOM IDENTIFICATION SIGNAGE

3" = 1'-0"

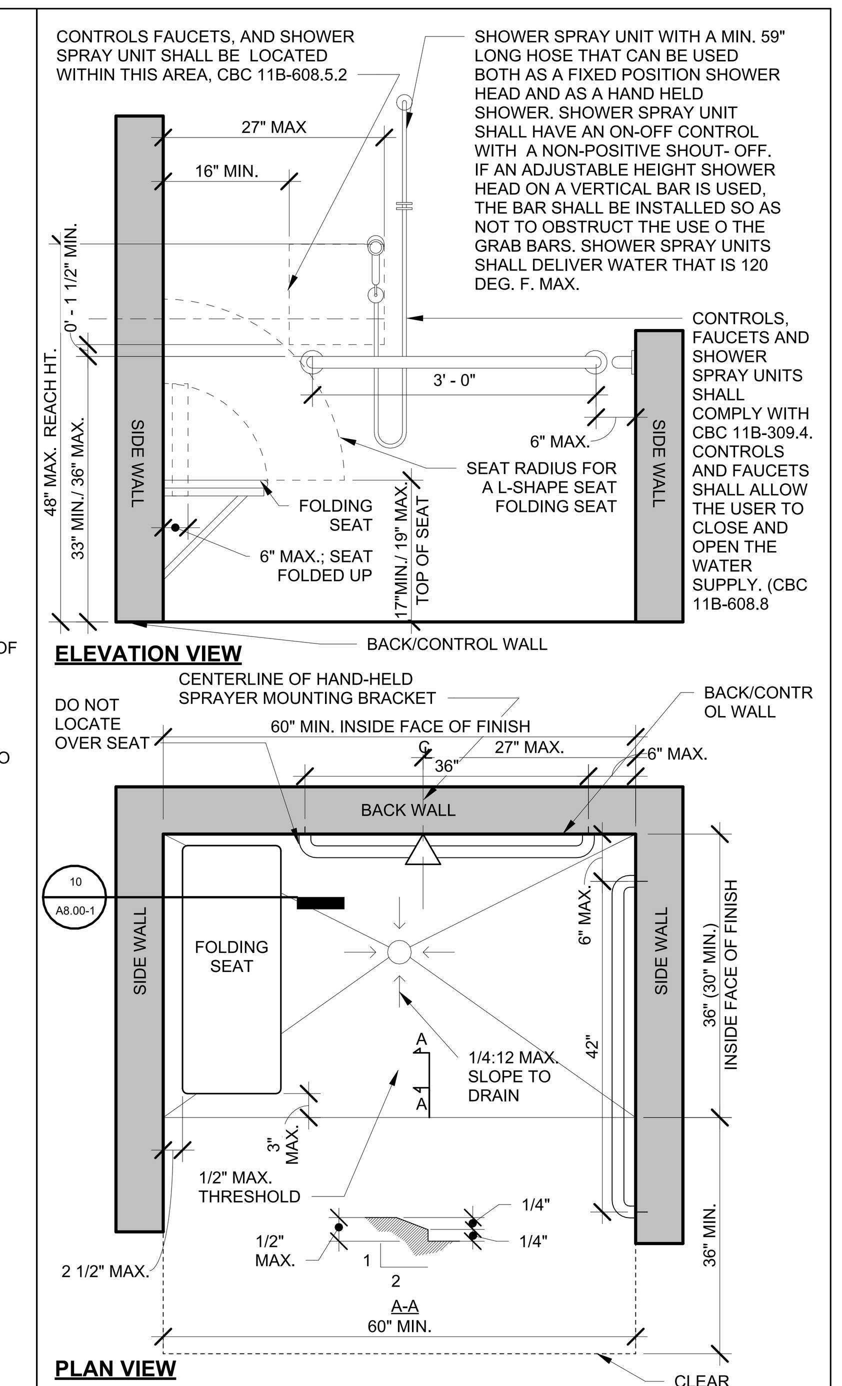

1 ACCESSIBLE SHOWER

3/4" = 1'-0"

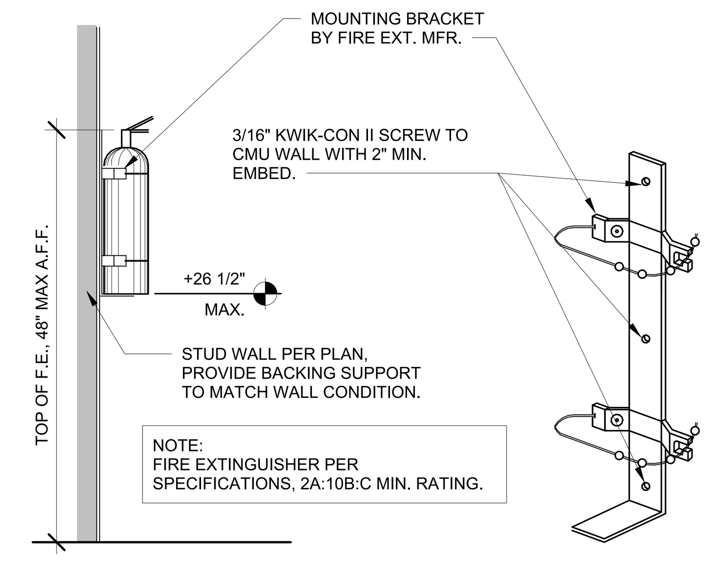

NOTE:
FIRE EXTINGUISHER PER SPECIFICATIONS, 2A:10B:C MIN. RATING.

9 FIRE EXTINGUISHER BRACKET INC.1

12" = 1'-0"

EXISTING ACCESSIBLE DOOR OPERATOR PUSH BUTTON

14 REAR ENTRY INTERIOR

1 1/2" = 1'-0"

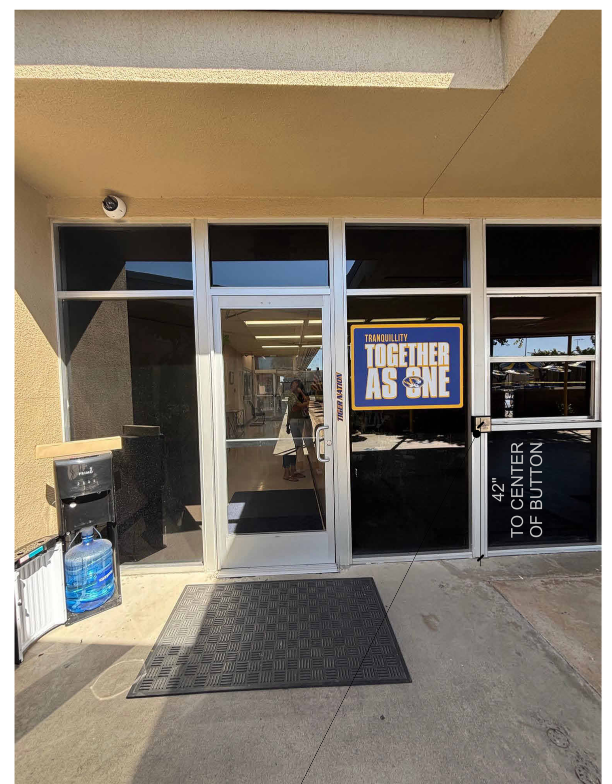

EXISTING ACCESSIBLE DOOR OPERATOR PUSH BUTTON

13 REAR ENTRY EXTERIOR

1 1/2" = 1'-0"

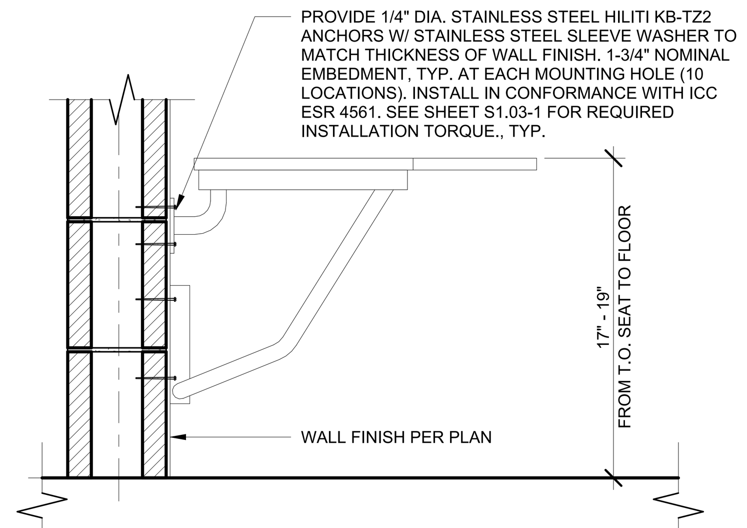

10 ACCESSIBLE SEAT ANCHORAGE

1 1/2" = 1'-0"

NOTES 1:

1. SIGNS SHALL COMPLY WITH SECTIONN 11B-703. WHERE BOTH VISUAL AND TACTILE CHARACTERS ARE REQUIRED, EITHER ONE SIGN WITH BOTH VISUAL AND ONE WITH TACTILE CHARACTERS, OR TWO SEPARATE SIGNS, ONE WITH VISUAL AND ONE WITH TACTILE CHARACTERS, SHALL BE PROVIDED.
2. RAISE CHARACTERS SHALL COMPLY WITH SECTION 11B-703.2 AND SHALL BE DUPLICATED IN BRAILLE COMPLYING WITH SECTIONS 11B-703.3.
3. CHARACTER AND BRAILLE SHALL BE IN A HORIZONTAL FORMAT. BRAILLE SHALL BE PLACED A MIN. OF 3/8 INCH AND A MAX. OF 1/2 INCH DIRECTLY BELOW THE TACTILE CHARACTERS; FLUSH LEFT OR CENTERED. WHEN TACTILE TEXT IS MULTI-LINED, ALL BRAILLE SHALL BE PLACED TOGETHER BELOW ALL LINES OF TACTILE TEXT, C.B. SEC. 11B-703.3.2.
4. TACTILE CHARACTERS ON SIGNS SHALL BE LOCATED 48 INCHES MINIMUM ABOVE THE FINISHED FLOOR OR GROUND SURFACE, MEASURED FROM THE BASELINE OF THE LOWEST BRAILLE CELLS AND 60 INCHES MAXIMUM ABOVE THE FINISH FLOOR OR GROUND SURFACE, MEASURED FROM THE BASELINE OF THE HIGHEST LINE OF RAISED CHARACTERS. PEER CBC 11B703.4.1.
5. WHERE A TACTILE SIGN IS PROVIDED AT DOUBLE DOORS WITH ONE ACTIVE LEAF, THE SIGN SHALL BE LOCATED ON THE INACTIVE LEAF. CBC 11B-703.4.2
6. WHERE A TACTILE SIGN IS PROVIDED AT DOUBLE DOORS WITH TWO ACTIVE LEAFS, THE SIGN SHALL BE LOCATED TO THE RIGHT OF THE RIGHT HAND DOOR. CBC 11B-703.4.2

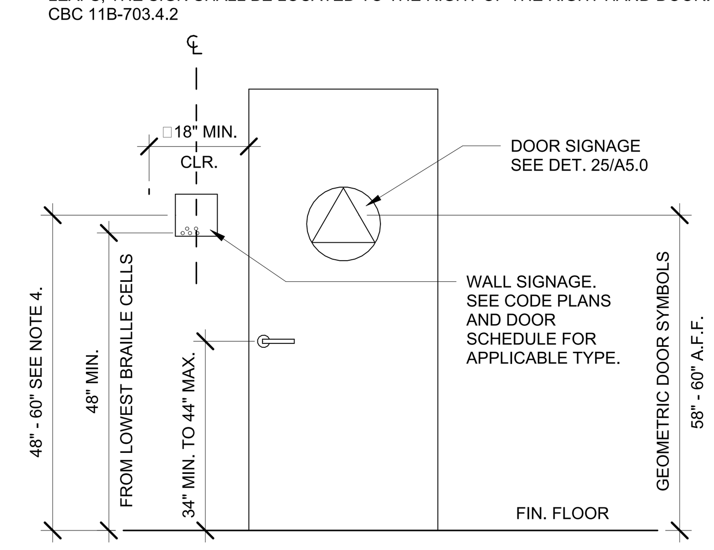

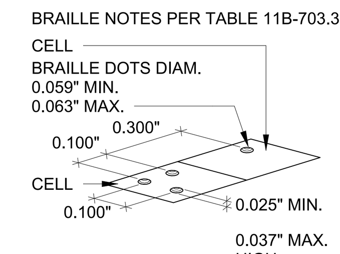

CONTRACTED GRADE 2 BRAILLE:

BRAILLE DOTS SHALL HAVE A DOMED OR ROUNDED SHAPE AND SHALL COMPLY WITH TABLE 11B-703.3.1. THE INDICATION OF AN UPPERCASE LETTER OR LETTERS SHALL ONLY BE USED BEFORE THE FIRST WORD OF SENTENCES, PROPER NOUNS AND NAMES, INDIVIDUAL LETTERS OF THE ALPHABET, INITIALS, AND ACRONYMS.

6 TYP. DOOR SIGNAGE PLACEMENT

1/2" = 1'-0"

NOTE: SEE STRCUTURAL FOR REINFORCEMENT

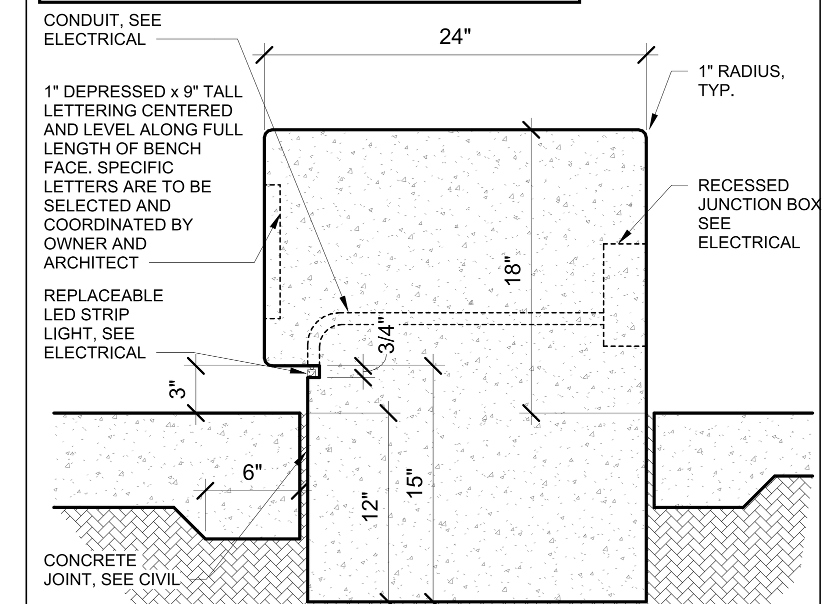

2 CONCRETE BENCH

1 1/2" = 1'-0"

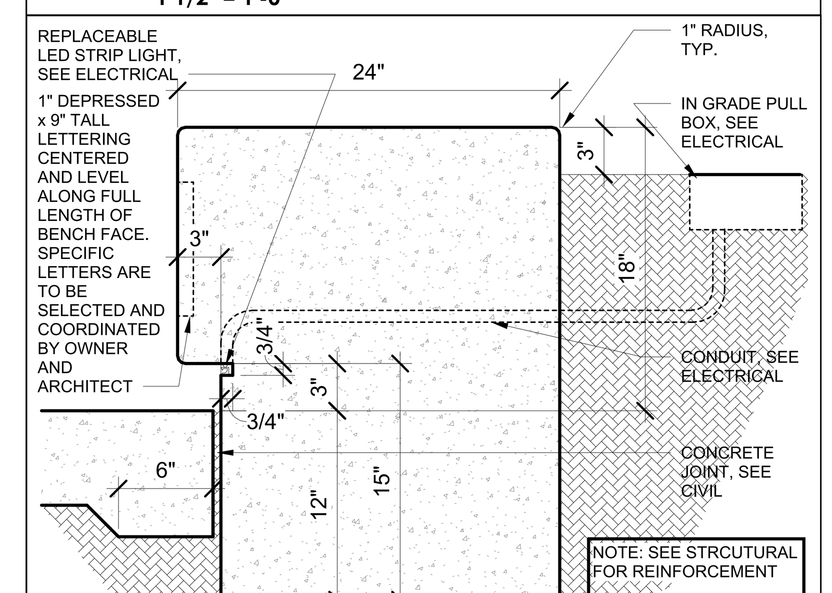

NOTE: SEE STRCUTURAL FOR REINFORCEMENT

3 CONC. BENCH @ PLANTER

1 1/2" = 1'-0"

EXISTING ACCESSIBLE DOOR OPERATOR PUSH BUTTON

15 MAIN ENTRY INTERIOR

1 1/2" = 1'-0"

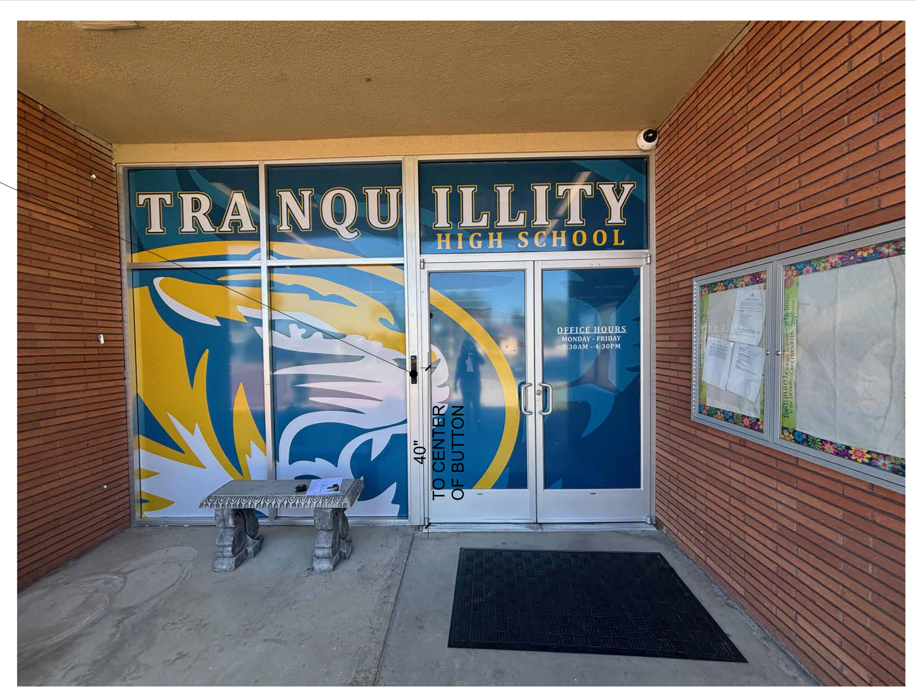

EXISTING ACCESSIBLE DOOR OPERATOR PUSH BUTTON

16 MAIN ENTRY EXTERIOR

1 1/2" = 1'-0"

NOTE: ACCESSIBLE PARKING SPACE SYMBOL SHALL BE ALIGNED WITH THE END OF THE STALL OR SPACE ADJACENT TO THE TRAFFIC AISLE SO THAT IT IS VISIBLE TO A TRAFFIC ENFORCEMENT OFFICER WHEN A VEHICLE IS PROPERLY PARKED IN THE SPACE.

NOTE: BLUE BACKGROUND SHALL BE EQUAL TO COLOR NO. 15090 IN FEDERAL STANDARD 595B.

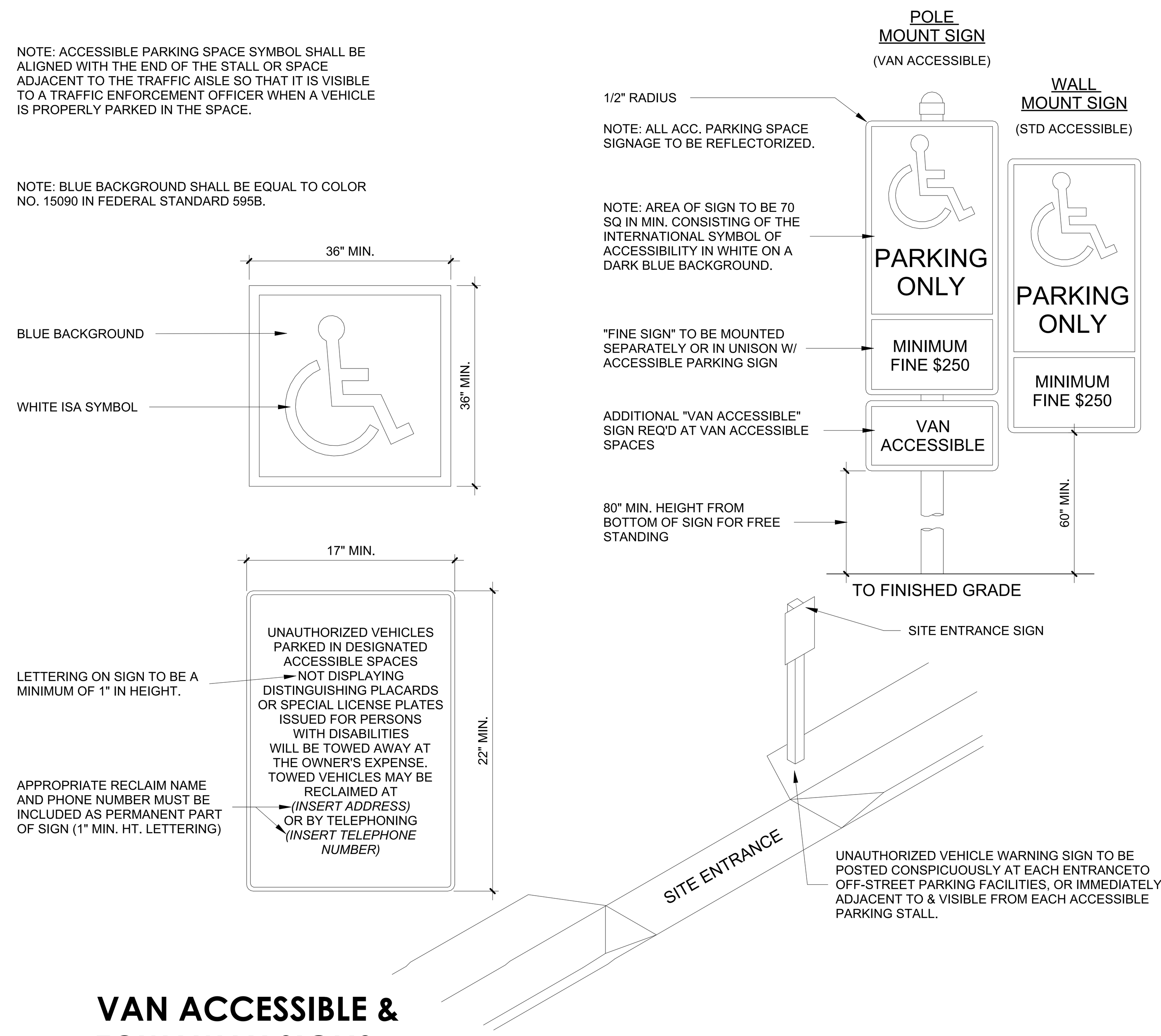

11 VAN ACCESSIBLE & TOWAWAY SIGNS

3" = 1'-0"

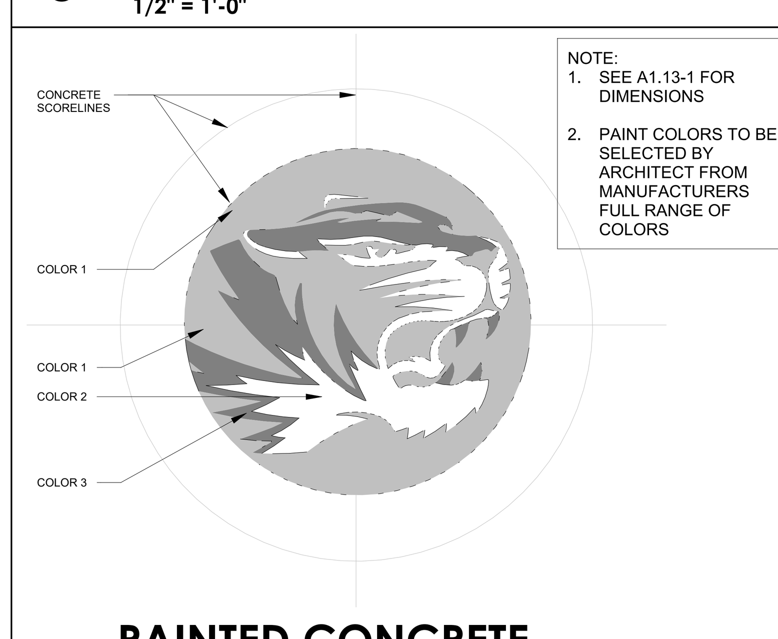

NOTE:
1. SEE A1.13-1 FOR DIMENSIONS
2. PAINT COLORS TO BE SELECTED BY ARCHITECT FROM MANUFACTURERS FULL RANGE OF COLORS

7 PAINTED CONCRETE LOGO

1/4" = 1'-0"

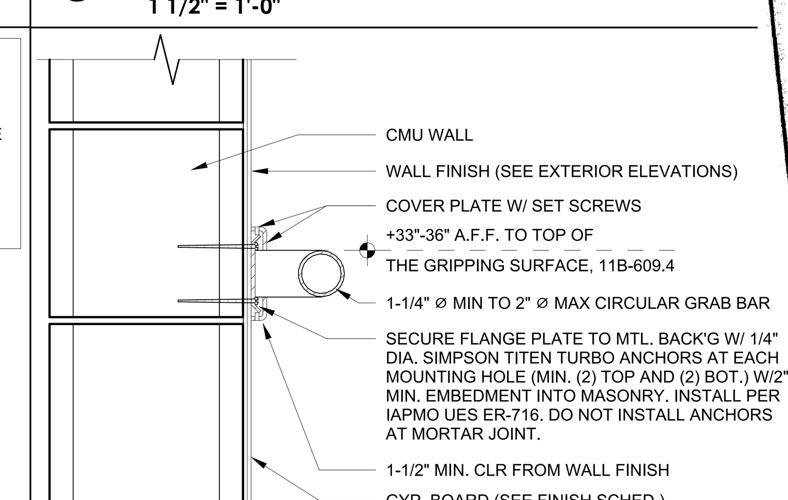

(G.B.) NOTE:
GRAB BAR SHALL BE ABLE TO WITHSTAND SHEAR OR COMBINED SHEAR & TORSIONAL LOAD OF 250 LBF. (CA T24 11B-609.8)

4 GRAB BAR ANCHORAGE TO CMU

3" = 1'-0"

AGD
ARCHITECTURE | DESIGN

ANDREW GOODWIN DESIGNS
1238 MONTEREY STREET
SAN LUIS OBISPO, CA 93422
t: (805) 439-1611
www.andrewgoodwin.us

These drawings are instruments of service and are the property of Andrew Goodwin Designs, Inc. The information represented on these drawings are exclusively for the project indicated and shall not be transferred or otherwise reproduced without express written permission of Andrew Goodwin. Copyright 2025

REVISIONS

REV # | REV DATE | REV DESCRIPTION

SEAL

LICENSED ARCHITECT
ANTONIO PAVONE
C-3...
REN. 9/30/2025
STATE OF CALIFORNIA
NOT FOR CONSTRUCTION

PROJECT

TRANQUILLITY HIGH SCHOOL
INCREMENT 1 AQUATIC CENTER MODERNIZATION
6052 Juanche Ave, Tranquillity, CA 93668

CLIENT

GOLDEN PLAINS UNIFIED SCHOOL DISTRICT

COUNTY OF FRESNO ENVIRONMENTAL HEALTH DIVISION
1221 Fulton Street – 3rd Floor (559) 600-3357
APPROVED
WITH NOTED CORRECTIONS AND SUBJECT TO FIELD INSPECTIONS
BY: DATE: 8/26/25
APPROVAL OF THIS PLAN DOES NOT CONSTITUTE PERMISSION TO VIOLATE ANY APPLICABLE CITY OR COUNTY ORDINANCE, OR STATE LAW, AND SHALL NOT PREVENT THIS DEPARTMENT FROM REQUIRING CORRECTION OF ERRORS OR OMISSIONS IN PLANS, SPECIFICATIONS OR CONSTRUCTION.

SHEET TITLE

ACCESSIBILITY DETAILS

PHASE DESCRIPTION
100% CD FCHD APPROVAL SWIMMING POOL

DATE:	8/26/2025
TECHNICIAN:	RT / JL
PROJECT MANAGER:	TP
JOB NUMBER:	791

SHEET NUMBER
A8.00-1

PLOT DATE: 8/13/2025 3:23:11 PM

EXHAUST FAN SCHEDULE

TAG	MAKE	MODEL	TYPE	DRIVE	PERFORMANCE CFM	PERFORMANCE ESP	PERFORMANCE RPM	PERFORMANCE OPERATING POWER WATTS [BHP]	PERFORMANCE SONES	MOTOR POWER V/ϕ/HZ	MOTOR NOM HP	ACCESSORIES BIRD GUARD	ACCESSORIES BACKDRAFT DAMPER	ACCESSORIES ROOF CURB	ACCESSORIES ROOF JACK	ACCESSORIES WALL CAP	ACCESSORIES FSC	OPERATING WEIGHT LBS	REMARKS SEE BELOW	INSTALLATION DETAIL
EF 1	GREENHECK	CSP-A510	INLINE	DIRECT	450	0.25	1,048	192	2.0	115/1/60	NA	NO	NO	NO	NO	NO	YES	40	C1	1/M0.00-1

GENERAL NOTES APPLICABLE TO ALL UNITS:
A. DISCONNECT PROVIDED BY ELECTRICAL CONTRACTOR.
B. FAN SPEED CONTROLLERS SHALL BE PROVIDED FROM THE FACTORY WITH THE SPEED CONTROLLER INTERNALLY MOUNTED WITHIN THE FAN HOUSING AND WIRED.

CONTROL NOTES:
C1. CONTROL WITH SINGLE POLE SWITCH, REFER TO FLOOR PLAN FOR LOCATION. SWITCH PROVIDED AND INSTALLED BY ELECTRICAL.

EXHAUST HOOD SCHEDULE

TAG	MAKE	MODEL	THROAT SIZE INCHES	THROAT AREA IN FT²	CFM	SP	THROAT VELOCITY FPM	ACCESSORIES BIRD GUARD	ACCESSORIES BACKDRAFT DAMPER	ACCESSORIES ROOF CURB	WEIGHT LBS	REMARKS SEE BELOW	INSTALLATION DETAIL
EH 1	GREENHECK	GRSR	12	0.82	450	0.05	549	YES	YES	YES	30	NA	2/M0.00-1

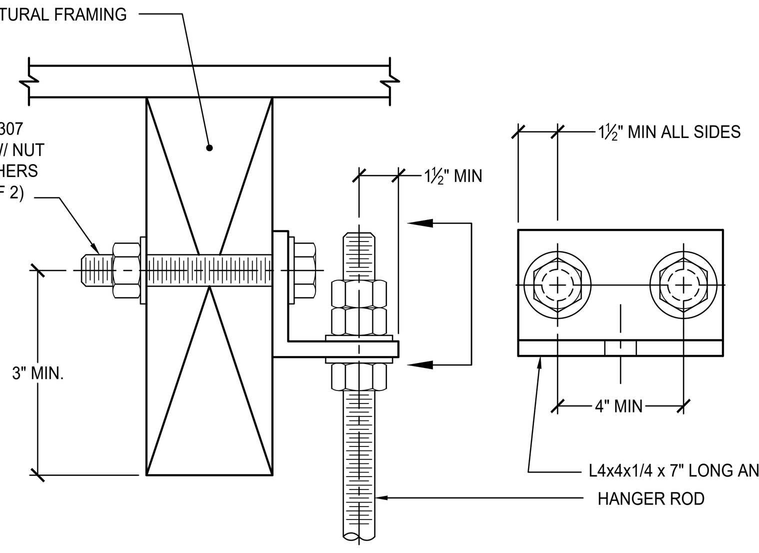

3 SUPPORT CONNECTION
NTS

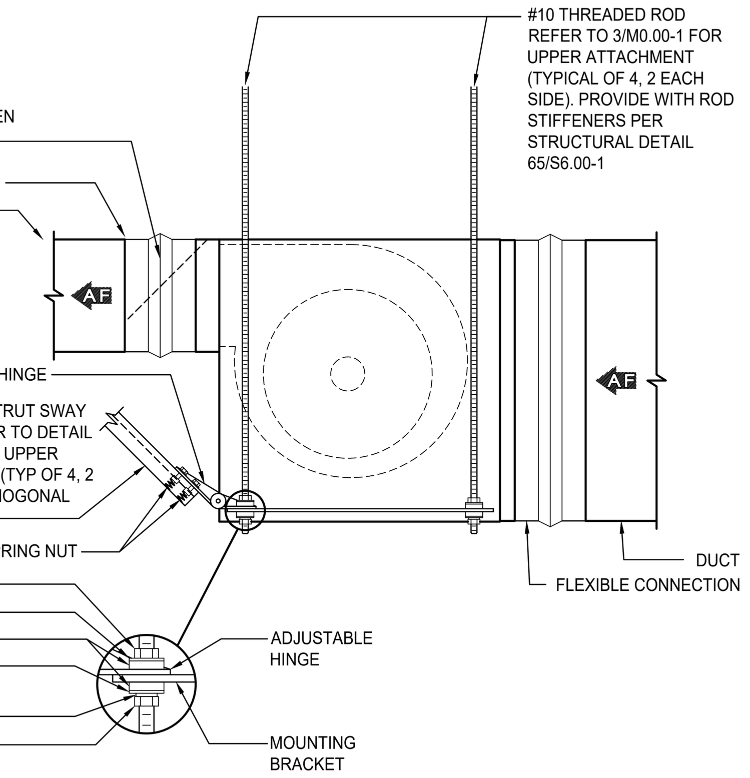

1 IN-LINE EXHAUST FAN
NTS

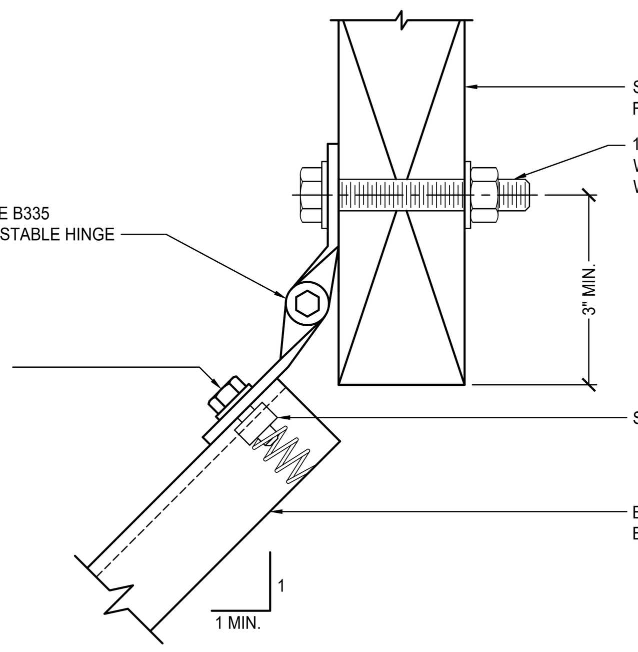

4 SWAY BRACE CONNECTION (STRUT)
NTS

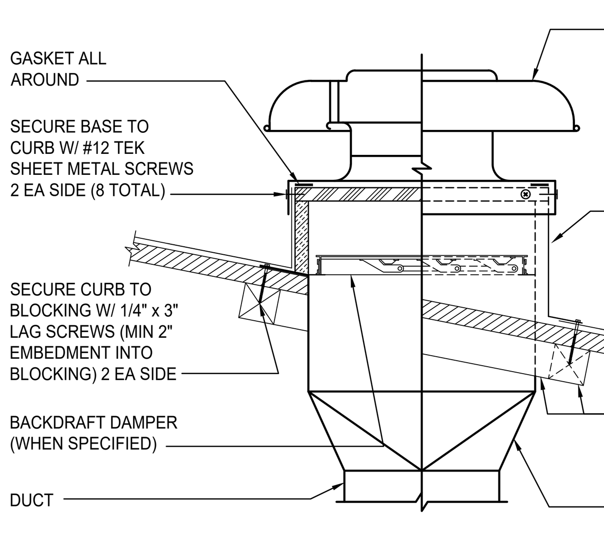

2 EXHAUST HOOD MOUNTING
NTS

MECHANICAL ABBREVIATIONS

AC	AIR CONDITION, AIR CONDITIONING, AIR CONDITIONED	HP	HORSE POWER
ABV	ABOVE	HVI	HOME VENTILATING INSTITUTE
AFF	ABOVE FINISHED FLOOR	HZ	HERTZ
AFUE	ANNUAL FUEL UTILIZATION EFFICIENCY	IDU	INDOOR UNIT
AHJ	AUTHORITY HAVING JURISDICTION	IWC	INCHES OF WATER COLUMN
AHU	AIR HANDLING UNIT	KW	KILOWATT
ALUM	ALUMINUM	LBS	POUNDS
AMCA	AIR MOVEMENT AND CONTROL ASSOCIATION	LWT	LEAVING WATER TEMPERATURE
AMB	AMBIENT	MBH	1000 BRITISH THERMAL UNITS PER HOUR
AP	ACCESS PANEL	MCA	MINIMUM CIRCUIT AMPS
ARCH	ARCHITECT, ARCHITECTURAL	MFGR	MANUFACTURE OR MANUFACTURER
AHRI	AIR CONDITIONING, HEATING, AND REFRIGERATION INSTITUTE	MIN	MINIMUM
ASHRAE	AMERICAN SOCIETY OF HEATING, REFRIGERATION, AND AIR CONDITIONING ENGINEERS	MUA	MAKE-UP AIR
BDD	BACK DRAFT DAMPER	(N)	NEW
BOD	BASIS OF DESIGN	NL	NOT LISTED
BEL	BELOW	NOM	NOMINAL
BHP	BRAKE HORSE POWER	NTS	NOT TO SCALE
BLDG	BUILDING	OA	OUTSIDE AIR
BTUH	BRITISH THERMAL UNIT PER HOUR	OAI	OUTSIDE AIR INTAKE
CA	COMBUSTION AIR	OBD	OPPOSED BLADE DAMPER
CD	CONDENSATE DRAIN	ODU	OUTDOOR UNIT
CFD	CEILING FIRE DAMPER	OSHPD	OFFICE OF STATEWIDE HEALTH PLANNING AND DEVELOPMENT
CFM	CUBIC FEET PER MINUTE	PD	PRESSURE DROP
CONT	CONTINUATION	PSI	POUNDS PER SQUARE INCH
CSD	CEILING SMOKE DAMPER	RA	RETURN AIR
DB	DRY BULB TEMPERATURE	REFRIG	REFRIGERANT, REFRIGERATION
DN	DOWN	RM	ROOM
DSA	DIVISION OF THE STATE ARCHITECT	RPM	REVOLUTIONS PER MINUTE
DTR	DOWN THROUGH ROOF	SA	SUPPLY AIR
(E)	EXISTING	SEER	SEASONAL ENERGY EFFICIENCY RATION
EA	EXHAUST AIR	SHT	SHEET
EC	EVAPORATIVE COOLER	SMACNA	SHEET METAL AND AIR CONDITIONING CONTRACTORS NATIONAL ASSOCIATION
EDB	ENTERING DRY BULB TEMPERATURE	SOV	SHUT OFF VALVE
EER	ENERGY EFFICIENCY RATIO	SP	STATIC PRESSURE
EFF	EFFICIENCY	SS	STAINLESS STEEL
ELEC	ELECTRICAL	SSE	STEADY STATE EFFICIENCY
ESP	EXTERNAL STATIC PRESSURE	SST	SATURATED SUCTION TEMPERATURE
EWB	ENTERING WET BULB	TEMP	TEMPORARY, TEMPERATURE
EWT	ENTERING WATER TEMPERATURE	TSP	TOTAL STATIC PRESSURE
FA	FROM ABOVE	TYP	TYPICAL
FC	FLEXIBLE CONNECTION	TXV	THERMAL EXPANSION VALVE
FD	FIRE DAMPER	UON	UNLESS OTHERWISE NOTED
FLA	FULL LOAD AMPS	UTR	UP TO OR UP THROUGH ROOF
FPM	FEET PER MINUTE	VD	VOLUME DAMPER
FSC	FAN SPEED CONTROLLER	VEX	VEHICLE EXHAUST SYSTEM
FSD	FIRE/SMOKE DAMPER	VRF	VARIABLE REFRIGERANT VOLUME
GA	GAGE, GAUGE	WB	WET BULB TEMPERATURE
GALV	GALVANIZED	WC	WATER COLUMN
GPM	GALLONS PER MINUTE	WG	WATER GAUGE
GYP	GYPSUM	WT	WEIGHT EXPRESSED IN POUNDS
HD	HEAD		

MECHANICAL, ELECTRICAL AND PLUMBING ANCHORAGE NOTE

1		ALL MECHANICAL, PLUMBING, AND ELECTRICAL COMPONENTS SHALL BE ANCHORED AND INSTALLED PER THE DETAILS ON THE DSA APPROVED CONSTRUCTION DOCUMENTS. THE FOLLOWING COMPONENTS SHALL BE ANCHORED OR BRACED TO MEET THE FORCE AND DISPLACEMENT REQUIREMENTS PRESCRIBED IN THE 2022 CBC, SECTIONS 1617A.1.18 THROUGH 1617A.1.26 AND ASCE 7-16 CHAPTER 13, 26 AND 30.
	A	ALL PERMANENT EQUIPMENT AND COMPONENTS.
	B	TEMPORARY, MOVABLE, OR MOBILE EQUIPMENT THAT IS PERMANENTLY ATTACHED (E.G. HARD WIRED) TO THE BUILDING UTILITY SERVICES SUCH AS ELECTRICITY, GAS OR WATER. "PERMANENTLY ATTACHED" SHALL INCLUDE ALL ELECTRICAL CONNECTIONS EXCEPT PLUGS FOR 110/220 VOLT RECEPTACLES HAVING A FLEXIBLE CABLE.
	C	TEMPORARY, MOVABLE, OR MOBILE EQUIPMENT WHICH IS HEAVIER THAN 400 POUNDS OR HAS A CENTER OF MASS LOCATED 4 FEET OR MORE ABOVE THE ADJACENT FLOOR OR ROOF LEVEL THAT DIRECTLY SUPPORT THE COMPONENT IS REQUIRED TO BE RESTRAINED IN A MANNER APPROVED BY DSA.
2		THE FOLLOWING MECHANICAL AND ELECTRICAL COMPONENTS SHALL BE POSITIVELY ATTACHED TO THE STRUCTURE BUT NEED NOT DEMONSTRATE DESIGN COMPLIANCE WITH THE REFERENCES NOTED ABOVE. THESE COMPONENTS SHALL HAVE FLEXIBLE CONNECTIONS PROVIDED BETWEEN THE COMPONENT AND ASSOCIATED DUCTWORK, PIPING, AND CONDUIT. FLEXIBLE CONNECTIONS MUST ALLOW MOVEMENT IN BOTH TRANSVERSE AND LONGITUDINAL DIRECTIONS:
	A	COMPONENTS WEIGHING LESS THAN 400 POUNDS AND HAVE A CENTER OF MASS LOCATED 4 FEET OR LESS ABOVE THE ADJACENT FLOOR OR ROOF LEVEL THAT DIRECTLY SUPPORT THE COMPONENT.
	B	COMPONENTS WEIGHING LESS THAN 20 POUNDS, OR IN THE CASE OF DISTRIBUTED SYSTEMS, LESS THAN 5 POUNDS PER FOOT, WHICH ARE SUSPENDED FROM A ROOF OR FLOOR OR HUNG FROM A WALL.
3		THE ANCHORAGE OF ALL MECHANICAL, ELECTRICAL, AND PLUMBING COMPONENTS SHALL BE SUBJECT TO THE APPROVAL OF THE DESIGN PROFESSIONAL IN GENERAL RESPONSIBLE CHARGE OR STRUCTURAL ENGINEER DELEGATED RESPONSIBILITY AND ACCEPTANCE BY DSA. THE PROJECT INSPECTOR WILL VERIFY THAT ALL COMPONENTS AND EQUIPMENT HAVE BEEN ANCHORED IN ACCORDANCE WITH ABOVE REQUIREMENTS.

PIPING, DUCTWORK & ELECTRICAL DISTRIBUTION SYSTEM BRACING NOTE

PIPING, DUCTWORK, AND ELECTRICAL DISTRIBUTION SYSTEMS SHALL BE BRACED TO COMPLY WITH THE FORCES AND DISPLACEMENTS PRESCRIBED IN ASCE 7-16 SECTION 13.3 AS DEFINED IN ASCE 7-16 SECTIONS 13.6.5, 13.6.6, 13.6.7, 13.6.8, AND 2022 CBC, SECTIONS 1617A.1.24, 1617A.1.25 AND 1617A.1.26.

THE METHOD OF SHOWING BRACING AND ATTACHMENTS TO THE STRUCTURE FOR THE IDENTIFIED DISTRIBUTION SYSTEM ARE AS NOTED BELOW. WHEN BRACING AND ATTACHMENTS ARE BASED ON A PRE APPROVED INSTALLATION GUIDE (E.G., HCAi OPM FOR 2013 CBC OR LATER), COPIES OF THE BRACING SYSTEM INSTALLATION GUIDE OR MANUAL SHALL BE AVAILABLE ON THE JOBSITE PRIOR TO THE START OF AND DURING THE HANGING AND BRACING OF THE DISTRIBUTION SYSTEMS. THE STRUCTURAL ENGINEER OF RECORD SHALL VERIFY THE ADEQUACY OF THE STRUCTURE TO SUPPORT THE HANGER AND BRACE LOADS.

MECHANICAL PIPING (MP), MECHANICAL DUCTS (MD), PLUMBING PIPING (PP), ELECTRICAL DISTRIBUTION SYSTEMS (E):

MP X MD X PP X E — OPTION 1: DETAILED ON THE APPROVED DRAWINGS WITH THE PROJECT SPECIFIC NOTES AND DETAILS

MP MD PP E — OPTION 2: SHALL COMPLY WITH HCAi (OSHPD) PREAPPROVAL (OPM #) #______________, AS INCLUDED IN THESE DRAWINGS WITH PROJECT SPECIFIC NOTES AND DETAILS.

NOTE: REFER TO ELECTRICAL DRAWINGS AND SPECIFICATIONS FOR ITEMS RELATED TO THE ELECTRICAL SYSTEM. LOW VOLTAGE CONDUIT FOR MECHANICAL SYSTEM CONTROLS SHALL BE IN ACCORDANCE WITH THE ELECTRICAL REQUIREMENTS.

MECHANICAL SYSTEM ACCEPTANCE TESTING REQUIREMENTS

ACCEPTANCE TESTING RELATED TO THE MECHANICAL SYSTEMS SHALL BE THE RESPONSIBILITY OF THE MECHANICAL CONTRACTOR AND SHALL BE PERFORMED BY AN ACCEPTANCE TESTING TECHNICIAN WHO HAS BEEN CERTIFIED BY A CALIFORNIA ENERGY COMMISSION APPROVED ACCEPTANCE TEST TECHNICIAN CERTIFICATION PROVIDER PROGRAM. THE TEST AND BALANCE CONTRACTOR CAN ALSO BE THE ACCEPTANCE TESTING TECHNICIAN. FOR APPLICABLE ACCEPTANCE TESTS SEE THE ENERGY COMPLIANCE DOCUMENTATION.

CAL GREEN CODE NONRESIDENTIAL MANDATORY MEASURES

DIVISION 5.4-MATERIAL CONSERVATION AND RESOURCE EFFICIENCY

5.410.2 COMMISSIONING. FOR NEW BUILDINGS 10,000 SQUARE FEET AND OVER, BUILDING COMMISSIONING SHALL BE INCLUDED IN THE DESIGN AND CONSTRUCTION PROCESSES OF THE BUILDING PROJECT TO VERIFY THAT THE BUILDING SYSTEMS AND COMPONENTS MEET THE OWNER'S OR OWNER REPRESENTATIVE'S PROJECT REQUIREMENTS.

REFER TO THE PROJECT SPECIFICATIONS FOR COMMISSIONING REQUIREMENTS.
5.410.4 TESTING AND ADJUSTING. TESTING AND ADJUSTING OF SYSTEMS SHALL BE REQUIRED FOR NEW BUILDINGS LESS THAN 10,000 SQUARE FEET OR NEW SYSTEMS TO SERVE AN ADDITION OR ALTERATION SUBJECT TO 2022 CGBSC 303.1.
5.410.4.2 SYSTEMS. DEVELOP A WRITTEN PLAN OF PROCEDURES FOR TESTING AND ADJUSTING SYSTEMS. SYSTEMS TO BE INCLUDED FOR TESTING AND ADJUSTING SHALL INCLUDE AT A MINIMUM, AS APPLICABLE TO THE PROJECT:
1. HVAC SYSTEMS AND CONTROLS
2. WATER HEATING SYSTEMS
3. WATER REUSE SYSTEMS
5.410.4.3 PROCEDURES. PERFORM TESTING AND ADJUSTING PROCEDURES IN ACCORDANCE WITH MANUFACTURER'S SPECIFICATIONS AND APPLICABLE STANDARDS ON EACH SYSTEM.

AT A MINIMUM THE MECHANICAL CONTRACTOR SHALL OBTAIN THE LATEST START-UP CHECK LIST(S) FROM THE EQUIPMENT MANUFACTURER AND PERFORM ALL TESTS AND CHECKS APPLICABLE. AFTER COMPLETION OF THE START-UP CHECK LIST THE MECHANICAL CONTRACTOR SHALL MAKE ADJUSTMENTS TO PUT THE EQUIPMENT IN PEAK WORKING ORDER. MECHANICAL CONTRACTOR SHALL DOCUMENT ALL WORK PERFORMED. CLOSE OUT DOCUMENTATION PROVIDED TO THE GENERAL CONTRACTOR SHALL INCLUDE ALL COMPLETED CHECK LIST(S) AND DOCUMENTATION FOR ANY WORK PERFORMED. THE GENERAL CONTRACTOR SHALL SUBMIT THE CHECK LIST(S) AND WORK DOCUMENTATION TO ENGINEER OF RECORD.
5.410.4.3.1 HVAC BALANCING. IN ADDITION TO TESTING AND ADJUSTING, BEFORE A NEW SPACE-CONDITIONING SYSTEM SERVING A BUILDING OR SPACE IS OPERATED FOR NORMAL USE, THE SYSTEM SHALL BE BALANCED IN ACCORDANCE WITH THE PROCEDURES DEFINED BY THE TESTING ADJUSTING AND BALANCING BUREAU NATIONAL STANDARDS; THE NATIONAL ENVIRONMENTAL BALANCING BUREAU PROCEDURAL STANDARDS; ASSOCIATED AIR BALANCE COUNCIL NATIONAL STANDARDS OR AS APPROVED BY THE BUILDING ENFORCING AGENCY.

SEE SPECIFICATION SECTION 23 00 13 FOR HVAC BALANCING REQUIREMENTS.
5.410.4.4 REPORTING. AFTER COMPLETION OF TESTING, ADJUSTING AND BALANCING, PROVIDE A FINAL REPORT OF TESTING SIGNED BY THE INDIVIDUAL RESPONSIBLE FOR PERFORMING THESE SERVICES.
5.410.4.5 OPERATION AND MAINTENANCE (O&M) MANUAL. PROVIDE THE BUILDING OWNER OR REPRESENTATIVE WITH DETAILED OPERATING AND MAINTENANCE INSTRUCTIONS AND COPIES OF GUARANTIES/WARRANTIES FOR EACH SYSTEM. O&M INSTRUCTIONS SHALL BE CONSISTENT WITH OSHA REQUIREMENTS IN CCR, TITLE 8, SECTION 5142, AND OTHER RELATED REGULATIONS.
5.410.4.5.1 INSPECTIONS AND REPORTS. INCLUDE A COPY OF ALL INSPECTION VERIFICATIONS AND REPORTS REQUIRED BY THE ENFORCING AGENCY.

DIVISION 5.5-ENVIRONMENTAL QUALITY

SECTION 5.504 POLLUTANT CONTROL

5.504.1 TEMPORARY VENTILATION. THE PERMANENT HVAC SYSTEM SHALL ONLY BE USED DURING CONSTRUCTION IF NECESSARY TO CONDITION THE BUILDING WITHIN THE REQUIRED TEMPERATURE RANGE FOR MATERIAL AND EQUIPMENT INSTALLATION. IF THE HVAC SYSTEM IS USED DURING CONSTRUCTION, USE RETURN AIR FILTERS WITH A MINIMUM EFFICIENCY REPORTING VALUE (MERV) OF 8, BASED ON ASHRAE 52.2-1999, OR AN AVERAGE EFFICIENCY OF 30% BASED ON ASHRAE 52.1-1992. REPLACE ALL FILTERS IMMEDIATELY PRIOR TO OCCUPANCY, OR, IF THE BUILDING IS OCCUPIED DURING ALTERATION, AT THE CONCLUSION OF CONSTRUCTION.
5.504.3 COVERING OF DUCT OPENINGS AND PROTECTION OF MECHANICAL EQUIPMENT DURING CONSTRUCTION. AT THE TIME OF ROUGH INSTALLATION AND DURING STORAGE ON THE CONSTRUCTION SITE UNTIL FINAL STARTUP OF THE HEATING, COOLING AND VENTILATING EQUIPMENT, ALL DUCT AND OTHER RELATED AIR DISTRIBUTION COMPONENT OPENINGS SHALL BE COVERED WITH TAPE, PLASTIC, SHEET METAL OR OTHER METHODS ACCEPTABLE TO THE ENFORCING AGENCY TO REDUCE THE AMOUNT OF DUST, WATER AND DEBRIS WHICH MAY ENTER THE SYSTEM.
5.504.4.1 ADHESIVES, SEALANTS AND CAULKS. ADHESIVES, SEALANTS, AND CAULKS USED ON THE PROJECT SHALL MEET THE REQUIREMENTS OF THE FOLLOWING STANDARDS:
1. ADHESIVES, ADHESIVE BONDING PRIMERS, ADHESIVE PRIMERS, SEALANTS, SEALANT PRIMERS AND CAULKS SHALL COMPLY WITH LOCAL OR REGIONAL AIR POLLUTION CONTROL OR AIR QUALITY MANAGEMENT DISTRICT RULES WHERE APPLICABLE, OR SCAQMD RULE 1168 VOC LIMITS, AS SHOWN IN TABLES 5.504.4.1 AND 5.504.4.2. SUCH PRODUCTS ALSO SHALL COMPLY WITH THE RULE 1168 PROHIBITION ON THE USE OF CERTAIN TOXIC COMPOUNDS (CHLOROFORM, ETHYLENE DICHLORIDE, METHYLENE CHLORIDE, PERCHLOROETHYLENE AND TRICHLOROETHYLENE), EXCEPT FOR AEROSOL PRODUCTS AS SPECIFIED IN SUBSECTION 2, BELOW.
2. AEROSOL ADHESIVES, AND SMALLER UNIT SIZES OF ADHESIVES, AND SEALANT OR CAULKING COMPOUNDS (IN UNITS OF PRODUCT, LESS PACKAGING, WHICH DO NOT WEIGH MORE THAN ONE POUND AND DO NOT CONSIST OF MORE THAN 16 FLUID OUNCES) SHALL COMPLY WITH STATEWIDE VOC STANDARDS AND OTHER REQUIREMENTS, INCLUDING PROHIBITIONS ON USE OF CERTAIN TOXIC COMPOUNDS, OF CALIFORNIA CODE OF REGULATIONS, TITLE 17, COMMENCING WITH SECTION 94507.

TABLE 5.504.4.1 ADHESIVE VOC LIMIT
LESS WATER AND LESS EXEMPT COMPOUNDS IN GRAMS PER LITER

SPECIALTY APPLICATIONS	CURRENT VOC LIMIT
PVC WELDING	510
CPVC WELDING	490
ABS WELDING	325
SPECIAL PURPOSE CONTACT ADHESIVE	250

1. IF AN ADHESIVE IS USED TO BOND DISSIMILAR SUBSTRATES TOGETHER THE ADHESIVE WITH THE HIGHEST VOC CONTENT SHALL BE ALLOWED.
2. FOR ADDITIONAL INFORMATION REGARDING METHODS TO MEASURE THE VOC CONTENT SPECIFIED IN THIS TABLE, SEE SOUTH COAST AIR QUALITY MANAGEMENT DISTRICT RULE 1168, HTTP://WWW.ARB.CA.GOV/DRDB/SC/CURHTML/R1168.PDF.
5.504.5.3 FILTERS. IN MECHANICALLY VENTILATED BUILDINGS, PROVIDE REGULARLY OCCUPIED AREAS OF THE BUILDING WITH AIR FILTRATION MEDIA FOR OUTSIDE AND RETURN AIR THAT PROVIDES AT LEAST A MINIMUM EFFICIENCY REPORTING VALUE (MERV) OF 13. MERV 13 FILTERS SHALL BE INSTALLED PRIOR TO OCCUPANCY, AND RECOMMENDATIONS FOR MAINTENANCE WITH FILTERS OF THE SAME VALUE SHALL BE INCLUDED IN THE OPERATION AND MAINTENANCE MANUAL. FILTERS SHALL BE CLEARLY LABELED BY THE MANUFACTURER INDICATING THE MERV RATING.

EXCEPTIONS:
1. EXISTING MECHANICAL EQUIPMENT.
SECTION 5.505 INDOOR MOISTURE CONTROL

5.505.1 INDOOR MOISTURE CONTROL. BUILDINGS SHALL MEET OR EXCEED THE PROVISIONS OF CALIFORNIA BUILDING CODE, CCR, TITLE 24, PART 2, SECTIONS 1202 (VENTILATION) AND CHAPTER 14 (EXTERIOR WALLS). FOR ADDITIONAL MEASURES NOT APPLICABLE TO LOW-RISE RESIDENTIAL OCCUPANCIES, SEE SECTION 5.407.2 OF THIS CODE.
SECTION 5.506 INDOOR AIR QUALITY

5.506.1 OUTSIDE AIR DELIVERY. FOR MECHANICALLY OR NATURALLY VENTILATED SPACES IN BUILDINGS, MEET THE MINIMUM REQUIREMENTS OF SECTION 120.1 (REQUIREMENTS FOR VENTILATION) OF THE 2022 CALIFORNIA ENERGY CODE, OR THE APPLICABLE LOCAL CODE, WHICHEVER IS MORE STRINGENT, AND DIVISION 1, CHAPTER 4 OF CCR, TITLE 8.
5.506.2 CARBON DIOXIDE (CO2) MONITORING. FOR BUILDINGS OR ADDITIONS EQUIPPED WITH DEMAND CONTROL VENTILATION, CO2 SENSORS AND VENTILATION CONTROLS SHALL BE SPECIFIED AND INSTALLED IN ACCORDANCE WITH THE REQUIREMENTS OF THE 2022 CALIFORNIA ENERGY CODE, SECTION 120.1(C)(4).
SECTION 5.508 OUTDOOR AIR QUALITY

5.508.1 OZONE DEPLETION AND GREENHOUSE GAS REDUCTIONS. INSTALLATIONS OF HVAC, REFRIGERATION AND FIRE SUPPRESSION EQUIPMENT SHALL COMPLY WITH SECTIONS 5.508.1.1 AND 5.508.1.2.
5.508.1.1 CHLOROFLUOROCARBONS (CFCS). INSTALL HVAC, REFRIGERATION AND FIRE SUPPRESSION EQUIPMENT THAT DO NOT CONTAIN CFCS.
5.508.1.2 HALONS. INSTALL HVAC, REFRIGERATION AND FIRE SUPPRESSION EQUIPMENT THAT DO NOT CONTAIN HALONS.
SECTION 702.1 INSTALLER TRAINING

HVAC SYSTEM INSTALLERS SHALL BE TRAINED AND CERTIFIED IN THE PROPER INSTALLATION OF HVAC SYSTEMS INCLUDING DUCTS AND EQUIPMENT BY A NATIONALLY OR REGIONALLY RECOGNIZED TRAINING OR CERTIFICATION PROGRAM. UNCERTIFIED PERSONS MAY PERFORM HVAC INSTALLATIONS WHEN UNDER THE DIRECT SUPERVISION AND RESPONSIBILITY OF A PERSON TRAINED AND CERTIFIED TO INSTALL HVAC SYSTEMS OR CONTRACTOR LICENSED TO INSTALL HVAC SYSTEMS. EXAMPLES OF ACCEPTABLE HVAC TRAINING AND CERTIFICATION PROGRAMS INCLUDE BUT ARE NOT LIMITED TO THE FOLLOWING:
1. STATE CERTIFIED APPRENTICESHIP PROGRAMS.
2. PUBLIC UTILITY TRAINING PROGRAMS.
3. TRAINING PROGRAMS SPONSORED BY TRADE, LABOR OR STATE-WIDE ENERGY CONSULTING OR VERIFICATION ORGANIZATIONS.
4. PROGRAMS SPONSORED BY MANUFACTURING ORGANIZATIONS.
5. OTHER PROGRAMS ACCEPTABLE TO THE ENFORCING AGENCY

MECHANICAL GENERAL NOTES

1 COMPLY WITH THE REQUIREMENTS OF THE FOLLOWING CODES:

2025 CALIFORNIA ADMINISTRATIVE CODE (CAC): PART 1, TITLE 24, CALIFORNIA CODE OF REGULATIONS (CCR)
2022 CALIFORNIA BUILDING CODE (CBC): PART 2, TITLE 24 CCR
2022 CALIFORNIA ELECTRICAL CODE (CEC): PART 3, TITLE 24 CCR
2022 CALIFORNIA MECHANICAL CODE (CMC): PART 4, TITLE 24 CCR
2022 CALIFORNIA PLUMBING CODE (CPC): PART 5, TITLE 24 CCR
2022 CALIFORNIA ENERGY CODE (CENC): PART 6, TITLE 24 CCR
2022 CALIFORNIA FIRE CODE (CFC): PART 9, TITLE 24 CCR
2022 CALIFORNIA GREEN BUILDING STANDARDS CODE (CAL GREEN): PART 11, TITLE 24 CCR

REPORT DEFICIENCIES WITHIN THIRTY (30) DAYS UPON AUTHORIZATION TO PROCEED.

2 THESE DRAWINGS ARE A GENERAL GRAPHIC PRESENTATION OF THE WORK. DUCTWORK, PIPING, AND EQUIPMENT, AS SHOWN, ARE SCHEMATIC. FABRICATE AND INSTALL BASED ON ACTUAL FIELD MEASUREMENT. COORDINATE WITH OTHER TRADES. ADHERE TO LOCATIONS AS CLOSELY AS POSSIBLE, VARY RUNS OR SHAPE OF DUCTWORK AS REQUIRED TO MEET STRUCTURAL AND OTHER INTERFERENCES AS REQUIRED BY THE ARCHITECT. PROVIDE A COMPLETE SET OF SHOP DRAWINGS REFLECTING ACTUAL DIMENSIONS, ACCESS REQUIREMENTS, AND DETAILS BASED UPON THE ACTUAL EQUIPMENT PROCURED. MAINTAIN AN UP TO DATE SET OF AS-BUILT DRAWINGS AT THE JOB SITE.

3 THE MECHANICAL CONTRACTOR SHALL COORDINATE ALL ITEMS RELATED TO MECHANICAL SYSTEMS WITH THE WORK OF OTHER TRADES BEFORE PROCEEDING WITH PROCURING OR FABRICATION OF EQUIPMENT, DUCTWORK, PIPING ETC. ITEMS TO BE COORDINATED SHALL INCLUDE BUT ARE NOT LIMITED TO THE FOLLOWING:

GRILLES, REGISTERS AND DIFFUSERS SHALL BE COORDINATED WITH THE REFLECTED CEILING PLAN.

DUCTWORK LOCATIONS AND POTENTIAL INTERFERENCES WITH STRUCTURAL MEMBERS, FRAMING, FIRE SPRINKLER LINES, PLUMBING WASTE LINES, CABLE TRAYS AND CONDUIT.

OPENINGS REQUIRED IN WALLS, FLOORS OR CEILINGS SHALL BE COORDINATED WITH THE GENERAL CONTRACTOR AND/OR FRAMING CONTRACTOR PRIOR TO THE START OF CONSTRUCTION TO AVOID REWORK. ANY REWORK REQUIRED SHALL BE AT NO ADDITIONAL COST TO THE OWNER.

PRIOR TO BIDDING THE PROJECT THE MECHANICAL CONTRACTOR SHALL COORDINATE WITH THE ELECTRICAL CONTRACTOR TO DETERMINE WHO WILL BE RESPONSIBLE FOR PROCURING AND INSTALLING MOTOR STARTERS, CONDUIT FOR LOW VOLTAGE CONTROLS AND LINE VOLTAGE CONTROL DEVICES, SUCH AS SINGLE POLE SWITCHES.

ACCESS TO VOLUME DAMPERS FOR BALANCING. ACCESS TO ALL EQUIPMENT, AS WELL AS PLATFORM AND CURB LOCATIONS.

CONSTRUCTION OF PLATFORMS AND SHAPED RUNNERS OR OTHER MEANS TO MOUNT CURBS LEVEL. ALL PLATFORMS AND CURBS SHALL BE LEVEL UNLESS OTHERWISE NOTED OR DETAILED ON THE MECHANICAL PLANS.

4 REVIEW ALL DRAWINGS AND SPECIFICATIONS INCLUDING ARCHITECTURAL, STRUCTURAL, CIVIL, MECHANICAL, PLUMBING, AND ELECTRICAL. ANY QUESTIONS SHALL BE BROUGHT UP, IN WRITING, TO THE ATTENTION OF THE ENGINEER BEFORE THE START OF CONSTRUCTION.

5 ALL EQUIPMENT SHALL BE INSTALLED WITH SUFFICIENT ACCESS TO CONTROLS, FILTERS, ELECTRIC MOTORS, ETC. ACCESS CLEARANCE SHALL BE 30" OR AS REQUIRED BY THE EQUIPMENT MANUFACTURER, WHICH EVER IS GREATER. CONTRACTORS SHALL PROVIDE ACCESS PANELS WHERE REQUIRED. WHERE VERTICAL SPACE ALLOWS, INSTALL DUCTWORK THAT IS IN CLOSE PROXIMITY TO MECHANICAL, ELECTRICAL OR ANY OTHER ITEM THAT REQUIRES ACCESS HIGH IN THE SPACE FOR EASE OF ACCESS.

6 PRIOR TO ROUGH-IN, COORDINATE THE ORIENTATION OF ELECTRICAL BOXES WITH THE DIMENSIONS OF THE DEVICE OR WALL PLATE THAT WILL BE INSTALLED IN OR ON THE ELECTRICAL BOX TO ENSURE THAT THE DEVICE IS CORRECTLY ORIENTED AND THE BOX IS PROPERLY ALIGNED TO BE COVERED BY THE DEVICE OR WALL PLATE.

7 HANDLE, STORE AND INSTALL EQUIPMENT PER MANUFACTURER'S INSTRUCTIONS.

8 BRACE AND SUPPORT PIPES, CONDUIT, AND DUCTWORK IN ACCORDANCE TO SMACNA GUIDELINES FOR SEISMIC RESTRAINTS OF MECHANICAL AND PLUMBING PIPING SYSTEM.

9 REFER TO ARCHITECTURAL REFLECTED CEILING PLAN FOR EXACT LOCATION OF DIFFUSERS, REGISTERS, GRILLES, AND ACCESS PANELS.

10 ALL DUCT DIMENSIONS, AS SHOWN ON MECHANICAL DRAWINGS ARE CLEAR INSIDE DIMENSIONS. INCREASE OUTER DUCT DIMENSION AS REQUIRED TO ACCOUNT FOR THE THICKNESS OF INTERNAL LINING WHERE APPLICABLE.

11 INSULATION AND FLEXIBLE DUCT SHALL COMPLY WITH STATE FIRE MARSHALL CRITERIA AND SHALL NOT EXCEED FLAME SPREAD OF 25 AND SMOKE DEVELOPED OF 50 PER ASTM-84, NFPA-223, AND UL 723.

12 INSULATE PIPING AND DUCTWORK IN ACCORDANCE TO THE GOVERNING CODES.

13 COMMISSION AND START-UP THE MECHANICAL SYSTEMS TO ASSURE A COMPLETE AND OPERATIONAL HVAC SYSTEM IN ACCORDANCE WITH ASHRAE AND NEBB.

14 ALL SQUARE ELBOWS IN SUPPLY DUCTWORK SHALL HAVE TURNING VANES. PROVIDE MANUAL VOLUME DAMPER AT EACH BRANCH DUCT TAKE-OFF SERVING EACH AIR TERMINAL DEVICE. PROVIDE BALANCING DAMPERS FOR EACH MAIN DUCT TAKE-OFF IN ACCORDANCE TO SMACNA IN ORDER TO ASSURE A COMPLETELY BALANCED SYSTEM.

15 CONTROLS AND SWITCHES INTENDED TO BE USED BY THE OCCUPANT OF A ROOM OR AREA TO CONTROL COOLING, HEATING AND VENTILATING EQUIPMENT SHALL BE MOUNTED AT THE HEIGHTS GIVEN BY SECTION 11B-308.1 OF THE 2022 CBC. NOTIFY THE ARCHITECT IMMEDIATELY IF THE MOUNTING HEIGHTS REQUIRED BY THE 2022 CBC CANNOT BE OBTAINED AT THE LOCATION WHERE THE CONTROL DEVICE IS SHOWN ON THE MECHANICAL FLOOR PLANS.

16 DUCT SMOKE DETECTORS WHEN NOT PROVIDED PRE-INSTALLED BY THE EQUIPMENT MANUFACTURER SHALL BE INSTALLED IN THE SUPPLY AIR DUCT OF AIR-MOVING SYSTEMS SUPPLYING AIR IN EXCESS OF 2000 CFM. DETECTORS SHALL BE LOCATED BETWEEN THE SUPPLY AIR DUCT CONNECTION AT THE EQUIPMENT AND THE FIRST BRANCH DUCT OR DIFFUSER. WHERE FIRE-DETECTION OR ALARM SYSTEMS ARE PROVIDED FOR THE BUILDING, ALL SMOKE DETECTORS SHALL BE SUPERVISED BY SUCH SYSTEMS IN AN APPROVED MANNER, AND INSTALLED IN ACCORDANCE WITH NFPA 72 AND THE CALIFORNIA BUILDING AND FIRE CODES.

17 ALL EQUIPMENT SHALL BE LABELED AS TO THE SPACE THEY ARE SERVING.

18 HABITABLE SPACE SHALL BE PROVIDED WITH A HEATING SYSTEM CAPABLE OF MAINTAINING A MINIMUM INDOOR TEMPERATURE OF 68°F AT A POINT 3 FEET ABOVE THE FLOOR PER 2022 CBC 1203.

19 MATERIALS EXPOSED WITHIN ANY SPACE BEING USED AS AN AIR PLENUM SHALL BE NON COMBUSTIBLE OR SHALL HAVE A FLAME SPREAD INDEX NOT GREATER THAN 25 AND A SMOKE DEVELOPED INDEX NOT GREATER THAN 50, WHEN TESTED AS A COMPOSITE PRODUCT IN ACCORDANCE WITH ONE OF THE FOLLOWING TEST METHODS: NFPA 255, METHOD OF TEST OF SURFACE BURNING CHARACTERISTICS OF BUILDING MATERIALS, ASTM E84, SURFACE BURNING CHARACTERISTICS OF BUILDING MATERIALS, OR UL 723, TEST FOR SURFACE BURNING CHARACTERISTIC OF BUILDING MATERIALS.

20 ANY MECHANICAL EQUIPMENT THAT PROVIDES POWER TO A ENERGIZED ACCESSORY MUST BE PROVIDED WITH A NAMEPLATE THAT REFLECTS THE ELECTRICAL CHARACTERISTICS OF THE COMPLETE SYSTEM AS INSTALLED WITH THE ENERGIZED ACCESSORY. NO EXCEPTIONS.

MECHANICAL LEGEND

SYMBOL	ABBREVIATION	DESCRIPTION
Ø	DIA	DIAMETER
	12Ø	ROUND DUCT
		ROUND DUCT TURNING DOWN, ROUND DUCT TURNING UP
		RECTANGULAR SUPPLY / OA, RETURN, EXHAUST / RELIEF DUCT PASSING THROUGH PLAIN OF VIEW
$ EF-X		SINGLE POLE SWITCH, SUBSCRIPT INDICATES ASSOCIATED FAN

PROJECT TEAM LIST

TITLE	NAME	DESK NUMBER	EMAIL ADDRESS
PRINCIPAL IN CHARGE	BRIAN STARRETT	805.540.5358	BSTARRETT@3CENG.COM
PROJECT MANAGER	BRIAN STARRETT	805.540.5358	BSTARRETT@3CENG.COM
MECHANICAL DESIGNER	DREW SCHMIDT	805.540.3363 EXT 310	DSCHMIDT@3CENG.COM
PLUMBING DESIGNER	ELI FERMAN	805.540.3363 EXT 309	EFERMAN@3CENG.COM

SHEET INDEX

SHEET NUMBER	SHEET TITLE
M0.00-1	BUILDING P - GENERAL & SCHEDULES
M0.01-1	BUILDING P - ENERGY COMPLIANCE DOCUMENTATION
M1.14-1	BUILDING P - FLOOR PLAN

COUNTY OF FRESNO ENVIRONMENTAL HEALTH DIVISION
1221 Fulton Street – 3rd Floor (559) 600-3357
APPROVED
WITH NOTED CORRECTIONS AND SUBJECT TO FIELD INSPECTIONS
BY: ______ DATE: 8/26/25
APPROVAL OF THIS PLAN DOES NOT CONSTITUTE PERMISSION TO VIOLATE ANY APPLICABLE CITY OR COUNTY ORDINANCE, OR STATE LAW, AND SHALL NOT PREVENT THIS DEPARTMENT FROM REQUIRING CORRECTION OF ERRORS OR OMISSIONS IN PLANS, SPECIFICATIONS OR CONSTRUCTION.

AGD ARCHITECTURE | DESIGN
ANDREW GOODWIN DESIGNS
1238 MONTEREY STREET
SAN LUIS OBISPO, CA 93422
t: (805) 439-1611
www.andrewgoodwin.us

3C | ENGINEERING
SMARTER BUILDINGS BY DESIGN
805.540.3363 www.3CENG.COM
1500 PALM ST. SAN LUIS OBISPO, CA 93401

BY 3C Engineering, Inc., ALL COMMON LAW COPYRIGHT AND OTHER PROPERTY RIGHTS RESERVE THIS DOCUMENT AS AN ORIGINAL AND UNPUBLISHED WORK PRODUCT. THIS WORK SHALL NOT BE DUPLICATED, COPIED, DISCLOSED OR USED IN CONNECTION WITH ANY WORK OR PROJECT OTHER THAN THE SPECIFIC PROJECT FOR WHICH IT HAS BEEN PREPARED, NOR SHALL IT BE ASSIGNED TO ANY THIRD PARTY WITHOUT FIRST OBTAINING THE EXPRESS WRITTEN CONSENT OF VISUAL CONTACT. THIS DOCUMENT SHALL CONSTITUTE CONCLUSIVE EVIDENCE OF ACCEPTANCE OF THESE RESTRICTIONS.

REVISIONS
REV # | REV DATE | REV DESCRIPTION

SEAL
REGISTERED PROFESSIONAL ENGINEER BRIAN P. STARRETT M 34068 EXP. 6/30/26 MECHANICAL STATE OF CALIFORNIA
NOT FOR CONSTRUCTION

PROJECT
TRANQUILLITY HIGH SCHOOL
AQUATIC CENTER MODERNIZATION
6052 Juanche Ave,
Tranquillity, CA 93668

CLIENT
GOLDEN PLAINS UNIFIED SCHOOL DISTRICT

SHEET TITLE
BUILDING P - GENERAL & SCHEDULES

PHASE DESCRIPTION
100% CD FCHD APPROVAL SWIMMING POOL

DATE: 8/26/2025
TECHNICIAN: DS
PROJECT MANAGER: BS
JOB NUMBER: 791
SHEET NUMBER
M0.00-1

PLOT DATE: 8/7/2025 2:39:35 PM

KEY NOTES

APPLICABLE TO THIS SHEET ONLY

1. PROVIDE WITH MANUFACTURER'S POWER DIRECTAIRE HORIZONTAL VENT KIT. KEEP FLUE TERMINATION AT LEAST 36" ABOVE INTAKE.
2. PROVIDE WITH MANUFACTURER'S DIRECT VENT TERMINATIONS FOR SIDEWALL DIRECT VENTING. KEEP FLUE TERMINATION AT LEAST 36" ABOVE INTAKE.

PASSIVE MAKE-UP AIR SCHEDULE

ROOM	DOOR LOUVER MINIMUM FREE AREA FT²	DOOR UNDER CUT
POOL EQUIPMENT ROOM P100	0.9	NA

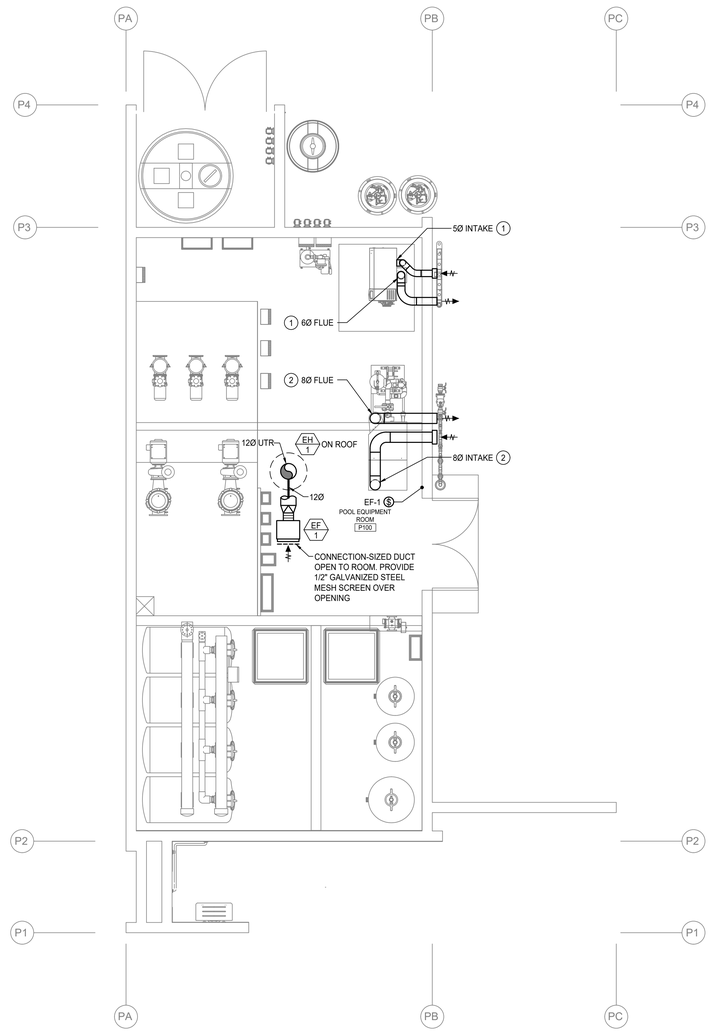

BUILDING P - FLOOR PLAN

SCALE:1/4"=1'-0"

COUNTY OF FRESNO ENVIRONMENTAL HEALTH DIVISION
1221 Fulton Street – 3rd Floor (559) 600-3357
APPROVED WITH NOTED CORRECTIONS AND SUBJECT TO FIELD INSPECTIONS
BY: DATE: 8/26/25
APPROVAL OF THIS PLAN DOES NOT CONSTITUTE PERMISSION TO VIOLATE ANY APPLICABLE CITY OR COUNTY ORDINANCE, OR STATE LAW, AND SHALL NOT PREVENT THIS DEPARTMENT FROM REQUIRING CORRECTION OF ERRORS OR OMISSIONS IN PLANS, SPECIFICATIONS OR CONSTRUCTION

AGD ARCHITECTURE | DESIGN

ANDREW GOODWIN DESIGNS
1238 MONTEREY STREET
SAN LUIS OBISPO, CA 93422
t: (805) 439-1611
www.andrewgoodwin.us

3C | ENGINEERING
SMARTER BUILDINGS BY DESIGN
t. 805.540.3500 w. www.3ceng.com
1.1005 Walt St. SAN LUIS OBISPO, CA 93401

BY 3C Engineering, Inc., ALL COMMON LAW COPYRIGHT AND OTHER PROPERTY RIGHTS ARE RESERVED TO THIS AN ORIGINAL AND UNPUBLISHED WORK PRODUCT. THIS WORK SHALL NOT BE REPRODUCED, DISTRIBUTED OR USED IN CONNECTION WITH ANY WORK OR PROJECT OTHER THAN THE SPECIFIC PROJECT FOR WHICH IT HAS BEEN PREPARED, NOR SHALL IT BE ASSIGNED TO ANY THIRD PARTY WITHOUT FIRST OBTAINING THE EXPRESS WRITTEN CONSENT OF VISUAL CONTACT. THIS DOCUMENT SHALL BE CONCLUSIVE EVIDENCE OF ACCEPTANCE OF THESE RESTRICTIONS.

REVISIONS

REV # | REV DATE | REV DESCRIPTION

SEAL

REGISTERED PROFESSIONAL ENGINEER
BRIAN S. SWANSON
No. M 34068
Exp. 12/30/26
MECHANICAL
STATE OF CALIFORNIA

NOT FOR CONSTRUCTION

PROJECT

TRANQUILLITY HIGH SCHOOL
AQUATIC CENTER MODERNIZATION
6052 Juanche Ave,
Tranquillity, CA 93668

CLIENT

GOLDEN PLAINS UNIFIED SCHOOL DISTRICT

SHEET TITLE

BUILDING P - FLOOR PLAN

PHASE DESCRIPTION
100% CD FCHD APPROVAL SWIMMING POOL

DATE:	8/26/2025
TECHNICIAN:	DS
PROJECT MANAGER:	BS
JOB NUMBER:	791

SHEET NUMBER

M1.14-1

PLOT DATE: 8/7/2025 2:39:43 PM

INSTANTANEOUS GAS WATER HEATER SCHEDULE

TAG	MAKE	MODEL	FUEL TYPE	FUEL CFH	EFFICIENCY	SET TEMP °F	INSTALLATION LOCATION	ELECTRICAL DATA POWER V/ϕ/HZ	ELECTRICAL DATA MOCP	ACCESSORIES LOW PROFILE SIDEWALL VENT KIT	OUTDOOR VENT KIT	PLUMB EASY VALVE SET	REMOTE CONTROLLER	INTEGRAL CIRC PUMP	NEUTRALIZER KIT	OPERATING WEIGHT (LBS)	NOTES (SEE BELOW)	INSTALLATION DETAIL
WH 1	RINNAI	RE199E	NG	200	.82	135	POOL BUILDING - OUTSIDE	120/1/60	15	NO	YES	YES	NO	NO	NO	44	N/A	4/P0.01-1
WH 2	RINNAI	RE199E	NG	200	.82	135	POOL BUILDING - OUTSIDE	120/1/60	15	NO	YES	YES	NO	NO	NO	44	N/A	4/P0.01-1

PLUMBING FIXTURE SCHEDULE

TAG	FIXTURE	BRANCH SIZE W	V	CW	HW	ELECTRICAL	MODEL & FITTINGS
FD-1	FLOOR DRAIN	2"	1-1/2"	NA	NA	NA	JAY R. SMITH 2005Y OR APPROVED EQUAL. PROVIDE WITH HEEL PROOF STRAINER, VANDAL PROOF SCREWS AND ROUND TOP UNLESS SPECIFIED OTHERWISE.
FS-1	FLOOR SINK	2"	1-1/2"	NA	NA	NA	WATTS #FS-730, 12"X12"X6-1/4" ENAMELED CAST IRON WITH HALF GRATE AND DOME STRAINER.
HB-1	HOSE BIBB	NA	NA	3/4"	NA	NA	WALL MOUNTED, WOODFORD #24, CHROME PLATED BRASS WITH VACUUM BREAKER. PROVIDE W/LOOSE TEE KEY.
SH-1	SHOWER - ACCESSIBLE	2"	1-1/2"	1/2"	1/2"	NA	BRADLEY #HN250-T24 SURFACE-MOUNTED SHOWER, STAINLESS STEEL, WITH CONCEALED SUPPLIES. 1.5GPM HAND SHOWER. 1.5 GPM SHOWER HEAD. INCLUDED SHALL BE AN AIR PUSHBUTTON, SHOWER PANEL, DIVERTER, THERMOSTATIC MIXING VALVE, AND INLINE VACUUM BREAKER.
SH-2	SHOWER	2"	1-1/2"	1/2"	1/2"	NA	BRADLEY #COL-6C-HN COLUMN SHOWER, STAINLESS STEEL, WITH CONCEALED SUPPLIES. 1.5 GPM SHOWER HEAD. 1.5GPM HAND SHOWERS. PROVIDE AIR PUSHBUTTON, DIVERTER, THERMOSTATIC MIXING VALVE, AND INLINE VACUUM BREAKER.
NOTES:	GENERAL NOTES APPLICABLE TO ALL FIXTURES: A. BRANCH PIPE SIZES TO INDIVIDUAL FIXTURES SHALL BE AS SCHEDULED UNLESS OTHERWISE SPECIFIED. B. FIXTURES SCHEDULED AS ACCESSIBLE SHALL BE INSTALLED PER ACCESSIBLE FACILITIES REQUIREMENTS. REFER TO ARCHITECTURAL DRAWINGS.						

LOW PRESSURE NATURAL GAS SIZING

SYSTEM	QUANTITY	CFH	TOTAL CFH
ENERGYRITE	1	399	399
AQUAS	1	1999	1999
WATER HEATER	2	199	398
TOTAL			2796
FUEL TYPE			**NATURAL GAS**
DISTANCE FROM REGULATOR TO FURTHEST APPLIANCE (FT)			50
INLET PRESSURE (PSI)			< 2
PRESSURE DROP (IN. W.C.)			0.5
PIPE SIZE REQUIRED (INCHES)			3
PIPE SIZE PROVIDED (INCHES)			3
ABOVE GRADE PIPING SIZED IN ACCORDANCE WITH 2022 CPC TABLE 1215.2(2)			
BELOW GRADE PIPING SIZED IN ACCORDANCE WITH 2022 CPC TABLE 1215.2(21)			

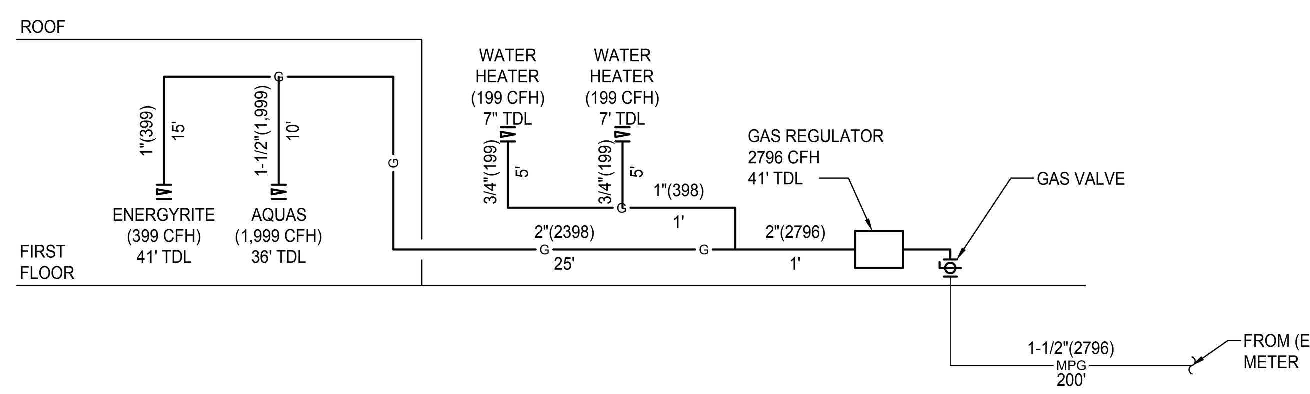

NOTES:
1. CONNECT TO INDIVIDUAL UNITS PER MANUFACTURER SIZING RECOMMENDATIONS.
2. EACH CONNECTION TO EQUIPMENT SHALL BE PROVIDED WITH A MINIMUM 6" SEDIMENT TRAP LOCATED IMMEDIATELY AFTER THE SHUT OFF VALVE.
3. HIGH PRESSURE GAS REGULATOR MUST BE INSTALLED A MINIMUM OF 10' FROM ENERGYRITE APPLIANCE.

A GAS RISER DIAGRAM

SCALE: NOT TO SCALE

PLUMBING LEGEND

SYMBOL	ABBREVIATION	DESCRIPTION
		BACK FLOW PREVENTOR
		BALANCING VALVE
		BALL VALVE
	BFV	BUTTERFLY VALVE
		CAP
		CHECKVALVE
	CP	CIRCULATION PUMP
	COTG	CLEAN OUT THROUGH GRADE
Ø	DIA	DIAMETER
ϕ		ELECTRICAL PHASE
	FCO	FLOOR CLEAN OUT
	HB	HOSE BIBB
		PIPE REDUCER
		RECESSED HOSE BIBB
		SHUT OFF VALVE IN PIPE DROP OR PIPE RISER
	YB	SHUT OFF VALVE IN YARD BOX
		STRAINER
	T&P	TEMPERATURE AND PRESSURE RELIEF VALVE
	TPV	TRAP PRIMER VALVE
		UNION
		PIPE DOWN
		PIPE UP
		PIPE TEE DOWN
		PIPE INTERSECTION
		PLUG VALVE ELEVATION VIEW
	PV	PLUG VALVE PLAN VIEW
		REDUCED PRESSURE BACK FLOW PREVENTOR
WCO	WCO	WALL CLEANOUT
	WHA	WATER HAMMER ARRESTOR
	CW	COLD WATER
CD	CD	CONDENSATE DRAIN
G	G	GAS (NATURAL)
MPG	MPG	MEDIUM PRESSURE GAS (NATURAL OR PROPANE)
	HW	HOT WATER
	HWR	HOT WATER RETURN
	V	SANITARY VENT
TP TP	TP	TRAP PRIMER
	S/W	WASTE (BELOW GRADE)
22x30 MIN AP	AP	ACCESS PANEL. SIZE GIVEN INDICATES MINIMUM SIZE REQUIRED

PLUMBING ABBREVIATIONS

ABV	ABOVE	GPF	GALLONS PER FLUSH
ADA	AMERICANS WITH DISABILITIES ACT	GPM	GALLONS PER MINUTE
AFF	ABOVE FINISHED FLOOR	GW	GREASE WASTE
AG	ABOVE GRADE	HP	HORSE POWER
AHJ	AUTHORITY HAVING JURISDICTION	HW	HOT WATER
ALUM	ALUMINUM	I.E.	INVERT ELEVATION
AMP	AMPERAGE	IN/H	INCHES PER HOUR
AP	ACCESS PANEL	IWC	INCHES OF WATER COLUMN
ARCH	ARCHITECT, ARCHITECTURAL	KW	KILOWATTS
BEL	BELOW	LAV	LAVATORY
BF	BELOW FLOOR	LBS	POUNDS
BG	BELOW GRADE	MAX	MAXIMUM
BFP	BACKFLOW PREVENTOR	MBH	1000 BRITISH THERMAL UNITS PER HOUR
BLDG	BUILDING	MCA	MINIMUM CIRCUIT AMPS
BOD	BASIS OF DESIGN	MECH	MECHANICAL
BTUH	BRITISH THERMAL UNIT PER HOUR	MFGR	MANUFACTURE OR MANUFACTURER
CA	COMBUSTION AIR	MIN	MINIMUM
CD	CONDENSATE DRAIN	(N)	NEW
CFH	CUBIC FEET PER HOUR	NPS	NOMINAL PIPE SIZE
CI	CAST IRON	NTS	NOT TO SCALE
CONN	CONNECTION	PH	PHASE
CONT	CONTINUATION	PSI	POUNDS PER SQUARE INCH
CP	CHROME PLATED	PW	PROCESS WASTE
CPC	CALIFORNIA PLUMBING CODE	RM	ROOM
COTG	CLEAN OUT THROUGH GRADE	RPM	REVOLUTIONS PER MINUTE
CW	COLD WATER	SDL	STORM DRAIN LEADER
DFU	DRAINAGE FIXTURE UNITS	SDO	STORM DRAIN OVERFLOW
DN	DOWN	SOV	SHUT OFF VALVE
DSA	DIVISION OF THE STATE ARCHITECT	SS	STAINLESS STEEL
(E)	EXISTING	TEMP	TEMPORARY, TEMPERATURE
EC	EVAPORATIVE COOLER	TYP	TYPICAL
EFF	EFFICIENCY	UON	UNLESS OTHERWISE NOTED
ELEC	ELECTRICAL	UTR	UP TO OR UP THROUGH ROOF
EQPT	EQUIPMENT	V	VENT
FCO	FLOOR CLEAN OUT	VAC	VACUUM
FFE	FINISH FLOOR ELEVATION	VTR	VENT THROUGH ROOF
FLA	FULL LOAD AMPS	W	WASTE
FLR	FLOOR	WC	WATER CLOSET
FPS	FEET PER SECOND	WCO	WALL CLEAN OUT
FR	FROM	WHA	WATER HAMMER ARRESTOR
FT	FLUSH TANK	WSFU	WATER SUPPLY FIXTURE UNIT
FV	FLUSH VALVE	WT	WEIGHT EXPRESSED IN POUNDS
GA	GAGE OR GAUGE	W/	WITH
GPC	GALLONS PER CYCLE	W/O	WITHOUT

PLUMBING GENERAL NOTES

1 COMPLY WITH THE REQUIREMENTS OF THE FOLLOWING CODES:

2022 CALIFORNIA ADMINISTRATIVE CODE (CAC): PART 1, TITLE 24, CALIFORNIA CODE OF REGULATIONS (CCR)
2022 CALIFORNIA BUILDING CODE (CBC): PART 2, TITLE 24 CCR
2022 CALIFORNIA ELECTRICAL CODE (CEC): PART 3, TITLE 24 CCR
2022 CALIFORNIA MECHANICAL CODE (CMC): PART 4, TITLE 24 CCR
2022 CALIFORNIA PLUMBING CODE (CPC): PART 5, TITLE 24 CCR
2022 CALIFORNIA ENERGY CODE (CENC): PART 6, TITLE 24 CCR
2022 CALIFORNIA FIRE CODE (CFC): PART 9, TITLE 24 CCR
2022 CALIFORNIA GREEN BUILDING STANDARDS CODE (CAL GREEN): PART 11, TITLE 24 CCR

REPORT DEFICIENCIES WITHIN THIRTY (30) DAYS UPON AUTHORIZATION TO PROCEED.

2 NO PLUMBING SHALL BE INSTALLED UNTIL ALL REQUIRED PLUMBING PLAN CHECK PERMITS AND APPROVALS HAVE BEEN OBTAINED FROM ALL REQUIRED AGENCIES.
3 LAVATORY FAUCETS, SINK FAUCETS (NOT INCLUDING SERVICE SINK FAUCETS OR FAUCETS DESIGNATED AS INSTITUTIONAL) SHALL MEET THE FLOW REQUIREMENTS OUTLINED IN THE APPLIANCE EFFICIENCY STANDARDS.
4 COORDINATE WITH THE ARCHITECTURAL DRAWINGS FOR EXACT LOCATION OF PLUMBING FIXTURES AND DRAINS.
5 PROVIDE ALL TAILPIECES, TRAPS, STOPS, AND SUPPLY PIPES TO LAVATORIES DESIGNED AS ACCESSIBLE, WITH PREFORMED INSULATION JACKET.
6 COORDINATE AND SCHEDULE TIMING FOR ALL UTILITY SERVICE CONNECTIONS.
7 ALL LINES BELOW SLAB ON GRADE TO BE LOCATED AWAY FROM ALL LOAD BEARING FOOTINGS.
8 ALL VENTS THRU ROOF SHALL BE MINIMUM OF 36 INCHES ABOVE ANY MECHANICAL VENTILATION AIR INTAKE WITHIN 10 FEET. PROVIDE VANDAL PROOF HOODS ON ALL VENTS THROUGH ROOF.
9 CONTRACTOR SHALL BE RESPONSIBLE FOR ALL CUTTING AND PATCHING OF WALLS, ROOFS, FOOTINGS, FLOORS, INCLUDING ALL SAW CUTTING AND CORE DRILLING. COORDINATE ALL SAW CUTTING AND CORE DRILLING WITH STRUCTURAL DRAWINGS. ANY CUTTING AND DRILLING REQUIRED OF STRUCTURAL ELEMENTS THAT IS NOT SPECIFICALLY SHOWN ON THE PLANS SHALL BE BROUGHT TO THE ARCHITECTS ATTENTION PRIOR TO CUTTING AND DRILLING. CONTRACTOR SHALL SUBMIT PROPOSED LOCATION AND SIZES OF SUCH CUTTING AND DRILLING FOR THE ARCHITECTS AND STRUCTURAL ENGINEERS APPROVAL.
10 COORDINATE ALL EQUIPMENT LOCATIONS, PIPE PENETRATIONS AND EQUIPMENT PAD LOCATIONS WITH STRUCTURAL DRAWING PRIOR TO WORK.
11 COORDINATE INSTALLATION OF ALL EQUIPMENT AND PIPING WITH OTHER TRADES PRIOR TO INSTALLATION. ENSURE THAT ALL CONTROL DEVICES, SHUT-OFF VALVES, ETC. ARE ACCESSIBLE FOR MAINTENANCE. WHERE ACCESS PANELS IN FINISHED SPACES, OTHER THAN THAT SHOWN, CONTRACTOR SHALL PROVIDE AND COORDINATE EXACT LOCATION OF PANELS WITH ARCHITECT PRIOR TO INSTALLATION.
12 ANY STRUCTURAL FIREPROOFING DAMAGED DURING INSTALLATION OF PLUMBING EQUIPMENT, PIPING, ETC. SHALL BE REPAIRED AT NO COST TO THE OWNER. REPAIRS SHALL BE AS DIRECTED BY THE ARCHITECT.
13 ALL PIPING PASSING THROUGH CONCRETE/MASONRY WALLS AND FLOORS ARE TO BE SLEEVED.
14 NEW OR REPAIRED POTABLE WATER SYSTEMS SHALL BE DISINFECTED PRIOR TO USE PER 2022 CPC 609.10. THE METHOD TO BE FOLLOWED SHALL BE THAT PRESCRIBED BY THE HEALTH AUTHORITY OR, IN CASE NO METHOD IS PRESCRIBED BY IT, THE FOLLOWING:
A) THE PIPE SYSTEM SHALL BE FLUSHED WITH CLEAN, POTABLE WATER UNTIL POTABLE WATER APPEARS AT THE POINTS OF OUTLET.
B) THE SYSTEM OR PARTS THEREOF SHALL BE FILLED WITH A WATER-CHLORINE SOLUTION CONTAINING NOT LESS THAN 50 PARTS PER MILLION OF CHLORINE, AND THE SYSTEM OR PART THEREOF SHALL BE VALVED-OFF AND ALLOWED TO STAND FOR 24 HOURS; OR, THE SYSTEM OF PART THEREOF SHALL BE FILLED WITH A WATER-CHLORINE SOLUTION CONTAINING NOT LESS THAN 200 PARTS PER MILLION OF CHLORINE AND ALLOWED TO STAND FOR 3 HOURS.
C) FOLLOWING THE ALLOWED STANDING TIME, THE SYSTEM SHALL BE FLUSHED WITH CLEAN, POTABLE WATER UNTIL THE CHLORINE RESIDUAL IN THE WATER COMING FROM THE SYSTEM DOES NOT EXCEED THE CHLORINE RESIDUAL IN THE FLUSHING WATER.
D) THE PROCEDURE SHALL BE REPEATED WHERE IT IS SHOWN BY BACTERIOLOGICAL EXAMINATION MADE BY AN APPROVED AGENCY THAT CONTAMINATION PERSISTS IN THE SYSTEM.

MECHANICAL, ELECTRICAL AND PLUMBING ANCHORAGE NOTE

1		ALL MECHANICAL, PLUMBING, AND ELECTRICAL COMPONENTS SHALL BE ANCHORED AND INSTALLED PER THE DETAILS ON THE DSA APPROVED CONSTRUCTION DOCUMENTS. THE FOLLOWING COMPONENTS SHALL BE ANCHORED OR BRACED TO MEET THE FORCE AND DISPLACEMENT REQUIREMENTS PRESCRIBED IN THE 2022 CBC, SECTIONS 1617A.1.18 THROUGH 1617A.1.26 AND ASCE 7-16 CHAPTER 13, 26 AND 30.
	A	ALL PERMANENT EQUIPMENT AND COMPONENTS.
	B	TEMPORARY, MOVABLE, OR MOBILE EQUIPMENT THAT IS PERMANENTLY ATTACHED (E.G. HARD WIRED) TO THE BUILDING UTILITY SERVICES SUCH AS ELECTRICITY, GAS OR WATER. "PERMANENTLY ATTACHED" SHALL INCLUDE ALL ELECTRICAL CONNECTIONS EXCEPT PLUGS FOR 110/220 VOLT RECEPTACLES HAVING A FLEXIBLE CABLE.
	C	TEMPORARY, MOVABLE, OR MOBILE EQUIPMENT WHICH IS HEAVIER THAN 400 POUNDS OR HAS A CENTER OF MASS LOCATED 4 FEET OR MORE ABOVE THE ADJACENT FLOOR OR ROOF LEVEL THAT DIRECTLY SUPPORT THE COMPONENT IS REQUIRED TO BE RESTRAINED IN A MANNER APPROVED BY DSA.
2		THE FOLLOWING MECHANICAL AND ELECTRICAL COMPONENTS SHALL BE POSITIVELY ATTACHED TO THE STRUCTURE BUT NEED NOT DEMONSTRATE DESIGN COMPLIANCE WITH THE REFERENCES NOTED ABOVE. THESE COMPONENTS SHALL HAVE FLEXIBLE CONNECTIONS PROVIDED BETWEEN THE COMPONENT AND ASSOCIATED DUCTWORK, PIPING, AND CONDUIT. FLEXIBLE CONNECTIONS MUST ALLOW MOVEMENT IN BOTH TRANSVERSE AND LONGITUDINAL DIRECTIONS:
	A	COMPONENTS WEIGHING LESS THAN 400 POUNDS AND HAVE A CENTER OF MASS LOCATED 4 FEET OR LESS ABOVE THE ADJACENT FLOOR OR ROOF LEVEL THAT DIRECTLY SUPPORT THE COMPONENT.
	B	COMPONENTS WEIGHING LESS THAN 20 POUNDS, OR IN THE CASE OF DISTRIBUTED SYSTEMS, LESS THAN 5 POUNDS PER FOOT, WHICH ARE SUSPENDED FROM A ROOF OR FLOOR OR HUNG FROM A WALL.
3		THE ANCHORAGE OF ALL MECHANICAL, ELECTRICAL, AND PLUMBING COMPONENTS SHALL BE SUBJECT TO THE APPROVAL OF THE DESIGN PROFESSIONAL IN GENERAL RESPONSIBLE CHARGE OR STRUCTURAL ENGINEER DELEGATED RESPONSIBILITY AND ACCEPTANCE BY DSA. THE PROJECT INSPECTOR WILL VERIFY THAT ALL COMPONENTS AND EQUIPMENT HAVE BEEN ANCHORED IN ACCORDANCE WITH ABOVE REQUIREMENTS.

PIPING, DUCTWORK & ELECTRICAL DISTRIBUTION SYSTEM BRACING NOTE

PIPING, DUCTWORK, AND ELECTRICAL DISTRIBUTION SYSTEMS SHALL BE BRACED TO COMPLY WITH THE FORCES AND DISPLACEMENTS PRESCRIBED IN ASCE 7-16 SECTION 13.3 AS DEFINED IN ASCE 7-16 SECTIONS 13.6.5, 13.6.6, 13.6.7, 13.6.8, AND 2022 CBC, SECTIONS 1617A.1.24, 1617A.1.25 AND 1617A.1.26.

THE METHOD OF SHOWING BRACING AND ATTACHMENTS TO THE STRUCTURE FOR THE IDENTIFIED DISTRIBUTION SYSTEM ARE AS NOTED BELOW. WHEN BRACING AND ATTACHMENTS ARE BASED ON A PRE APPROVED INSTALLATION GUIDE (E.G., HCAi OPM FOR 2013 CBC OR LATER), COPIES OF THE BRACING SYSTEM INSTALLATION GUIDE OR MANUAL SHALL BE AVAILABLE ON THE JOBSITE PRIOR TO THE START OF AND DURING THE HANGING AND BRACING OF THE DISTRIBUTION SYSTEMS. THE STRUCTURAL ENGINEER OF RECORD SHALL VERIFY THE ADEQUACY OF THE STRUCTURE TO SUPPORT THE HANGER AND BRACE LOADS.

MECHANICAL PIPING (MP), MECHANICAL DUCTS (MD), PLUMBING PIPING (PP), ELECTRICAL DISTRIBUTION SYSTEMS (E):

MP X MD X PP X E — OPTION 1: DETAILED ON THE APPROVED DRAWINGS WITH THE PROJECT SPECIFIC NOTES AND DETAILS

MP MD PP E — OPTION 2: SHALL COMPLY WITH THE APPLICABLE OSHPD PRE-APPROVAL OPM-0052-13

NOTE: REFER TO ELECTRICAL DRAWINGS AND SPECIFICATIONS FOR ITEMS RELATED TO THE ELECTRICAL SYSTEM. LOW VOLTAGE CONDUIT FOR MECHANICAL SYSTEM CONTROLS SHALL BE IN ACCORDANCE WITH THE ELECTRICAL REQUIREMENTS.

PLUMBING TITLE 24 NOTES

1 PROVIDE WATER HEATERS CERTIFIED IN COMPLIANCE WITH CALIFORNIA ENERGY APPLIANCE EFFICIENCY STANDARDS.
2 PROVIDE DOMESTIC HOT WATER PIPING INSULATION IN ACCORDANCE WITH THE CALIFORNIA ENERGY EFFICIENCY STANDARDS.

PROJECT TEAM LIST

TITLE	NAME	DESK NUMBER	EMAIL ADDRESS
PRINCIPAL IN CHARGE	BRIAN STARRETT	805.540.5358	BSTARRETT@3CENG.COM
PROJECT MANAGER	BRIAN STARRETT	805.540.5358	BSTARRETT@3CENG.COM
MECHANICAL DESIGNER	DREW SCHMIDT	805.540.3363 EXT 310	DSCHMIDT@3CENG.COM
PLUMBING DESIGNER	ELI FERMAN	805.540.3363 EXT 309	EFERMAN@3CENG.COM

SHEET INDEX

SHEET NUMBER	SHEET TITLE
P0.00	BUILDING P - GENERAL & SCHEDULES
P0.01	BUILDING P - DETAILS
P1.00	BUILDING P - SITE PLAN
P1.14	BUILDING P - FLOOR PLANS

COUNTY OF FRESNO ENVIRONMENTAL HEALTH DIVISION
1221 Fulton Street – 3rd Floor (559) 600-3357
APPROVED
WITH NOTED CORRECTIONS AND SUBJECT TO FIELD INSPECTIONS
BY: DATE: 8/26/25
APPROVAL OF THIS PLAN DOES NOT CONSTITUTE PERMISSION TO VIOLATE ANY APPLICABLE CITY OR COUNTY ORDINANCE, OR STATE LAW, AND SHALL NOT PREVENT THIS DEPARTMENT FROM REQUIRING CORRECTION OF ERRORS OR OMISSIONS IN PLANS, SPECIFICATIONS OR CONSTRUCTION.

AGD ARCHITECTURE | DESIGN
ANDREW GOODWIN DESIGNS
1238 MONTEREY STREET
SAN LUIS OBISPO, CA 93422
t: (805) 439-1611
www.andrewgoodwin.us

3C | ENGINEERING
SMARTER BUILDINGS BY DESIGN
805.540.3363 • WWW.3CENG.COM
1500 PALM ST. SAN LUIS OBISPO, CA 93401

BY 3C Engineering, Inc., ALL COMMON LAW COPYRIGHT AND OTHER PROPERTY RIGHTS RESERVE THIS DOCUMENT AS AN ORIGINAL AND UNPUBLISHED WORK PRODUCT. THIS WORK SHALL NOT BE DUPLICATED, COPIED, DISCLOSED OR USED IN CONNECTION WITH ANY WORK OR PROJECT OTHER THAN THE SPECIFIC PROJECT FOR WHICH IT HAS BEEN PREPARED, NOR SHALL IT BE ASSIGNED TO ANY THIRD PARTY WITHOUT FIRST OBTAINING THE EXPRESS WRITTEN CONSENT OF VISUAL CONTACT. THIS DOCUMENT SHALL CONSTITUTE CONCLUSIVE EVIDENCE OF ACCEPTANCE OF THESE RESTRICTIONS.

REVISIONS

REV # | REV DATE | REV DESCRIPTION

SEAL

REGISTERED PROFESSIONAL ENGINEER BRIAN P. STARRETT M 34068 EXP. 6/30/26 MECHANICAL STATE OF CALIFORNIA

NOT FOR CONSTRUCTION

PROJECT

TRANQUILLITY HIGH SCHOOL
AQUATIC CENTER MODERNIZATION
6052 Juanche Ave,
Tranquillity, CA 93668

CLIENT

GOLDEN PLAINS UNIFIED SCHOOL DISTRICT

SHEET TITLE

BUILDING P - GENERAL & SCHEDULES

PHASE DESCRIPTION
100% CD FCHD APPROVAL SWIMMING POOL

DATE: 8/26/2025

TECHNICIAN: DS

PROJECT MANAGER: BS

JOB NUMBER: 791

SHEET NUMBER

P0.00-1

PLOT DATE: 8/6/2025 5:07:24 PM

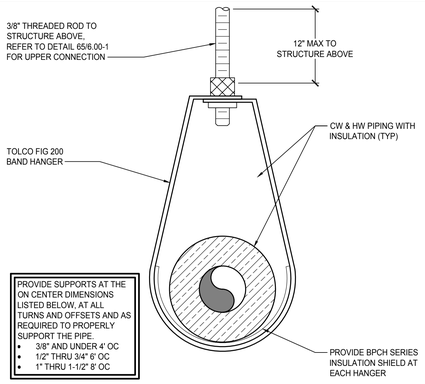

8 LINE SET SUPPORT DETAIL
NTS

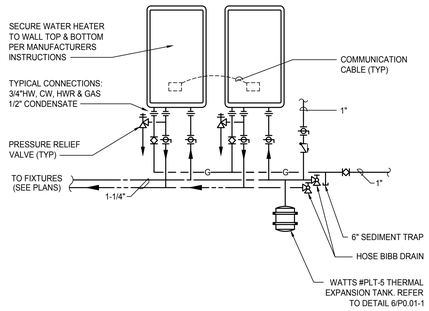

4 WATER HEATER DETAIL
NTS

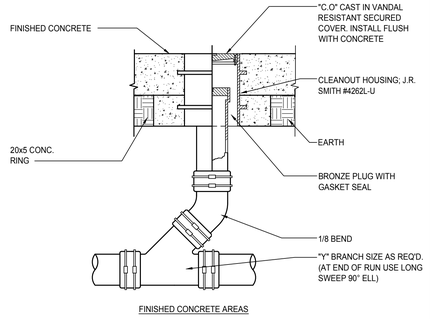

FINISHED CONCRETE AREAS

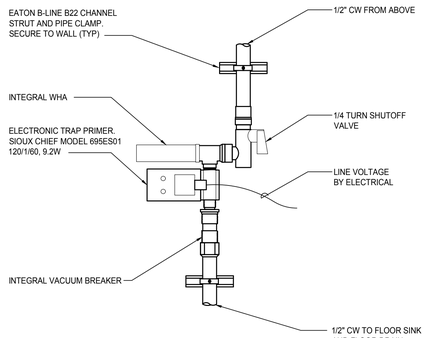

5 ELECTRONIC TRAP PRIMER
NTS

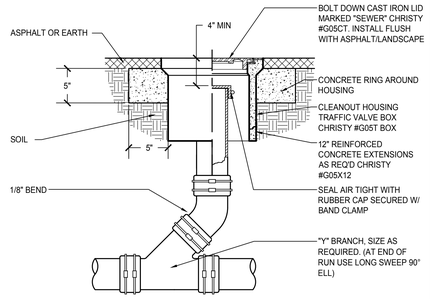

ASPHALT & LANDSCAPED AREAS

CLEANOUTS IN PIPING 2" OR LESS SHALL HAVE A CLEARANCE OF NOT LESS THAN 18" X 18" IN FRONT OF THE CLEANOUT, CLEANOUTS IN PIPING LARGER THAN 2" INCHES SHALL HAVE A CLEARANCE OF NOT LESS THAN 24" X 24".

CLEANOUTS: CPC TABLE 707.1

PIPE SIZE	CLEANOUT SIZE	THREADS (PER INCH)
1-1/2" - 2"	1-1/2"	11-1/2
2-1/2" - 3"	2-1/2"	8
4" & LARGER	3-1/2"	8

1 CLEANOUT TO GRADE
NTS

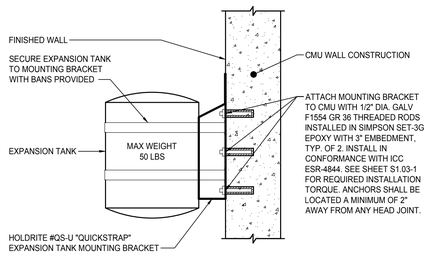

6 EXPANSION TANK SUPPORT
NTS

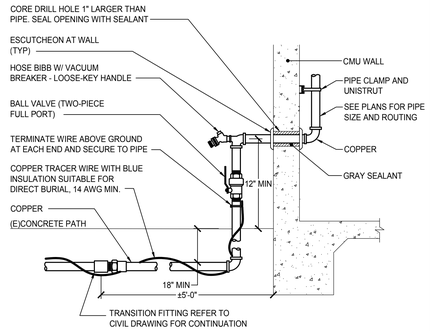

2 BUILDING WATER SUPPLY
NTS

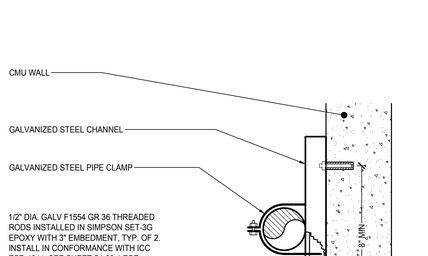

7 PIPE SUPPORT - CMU WALL
NTS

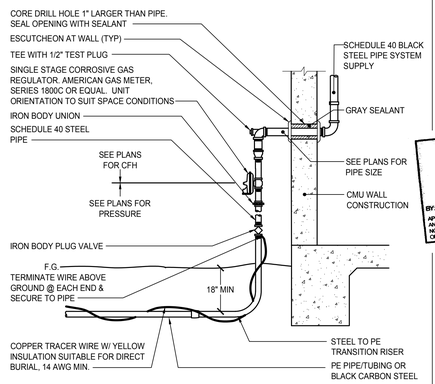

3 GAS SERVICE TO BUILDING
NTS

AGD ARCHITECTURE | DESIGN

ANDREW GOODWIN DESIGNS
1238 MONTEREY STREET
SAN LUIS OBISPO, CA 93422
t: (805) 439-1611
www.andrewgoodwin.us

3C | ENGINEERING
SMARTER BUILDINGS BY DESIGN
t. 805.540.3500 ■ www.3ceng.com
1 3C Engineering

BY 3C Engineering, Inc., ALL COMMON-LAW COPYRIGHT AND OTHER PROPERTY RIGHTS INCIDENT TO THE DESIGN AS AN ORIGINAL AND UNPUBLISHED WORK PRODUCT. THIS WORK SHALL NOT BE DUPLICATED OR DISCLOSED TO OTHERS USED IN CONNECTION WITH ANY WORK OR PROJECT OTHER THAN THE SPECIFIC PROJECT FOR WHICH IT HAS BEEN PREPARED, NOR SHALL IT BE ASSIGNED TO OTHERS WITHOUT THE PRIOR OBTAINING THE EXPRESS WRITTEN CONSENT OF VISUAL CONTACT. THIS NOTICE SHALL BE CONSIDERED CONCLUSIVE EVIDENCE OF ACCEPTANCE OF THESE RESTRICTIONS.

REVISIONS

REV #	REV DATE	REV DESCRIPTION

SEAL

PROJECT

TRANQUILLITY HIGH SCHOOL
AQUATIC CENTER MODERNIZATION
6052 Juanche Ave,
Tranquillity, CA 93668

CLIENT

GOLDEN PLAINS UNIFIED SCHOOL DISTRICT

COUNTY OF FRESNO ENVIRONMENTAL HEALTH DIVISION
1221 Fulton Street - 3rd Floor (559) 600-3357
APPROVED WITH NOTED CORRECTIONS AND SUBJECT TO FIELD INSPECTIONS
BY: DATE: 8/26/25
APPROVAL OF THIS PLAN DOES NOT CONSTITUTE PERMISSION TO VIOLATE ANY APPLICABLE CITY OR COUNTY ORDINANCE, OR STATE LAW, AND SHALL NOT PREVENT THIS DEPARTMENT FROM REQUIRING CORRECTION OF ERRORS OR OMISSIONS IN PLANS, SPECIFICATIONS OR CONSTRUCTION.

SHEET TITLE

BUILDING P - DETAILS

PHASE DESCRIPTION
100% CD FCHD APPROVAL SWIMMING POOL

DATE: 8/26/2025

TECHNICIAN: DS

PROJECT MANAGER: BS

JOB NUMBER: 791

SHEET NUMBER

P0.01-1

PLOT DATE: 8/6/2025 5:07:24 PM

CONNECT TO EXISTING PLUGGED SHUT OFF VALVE. PROVIDE NEW 7"-14" W.C. REGULATOR.

2 (E) GAS MANIFOLD

SCALE: NTS

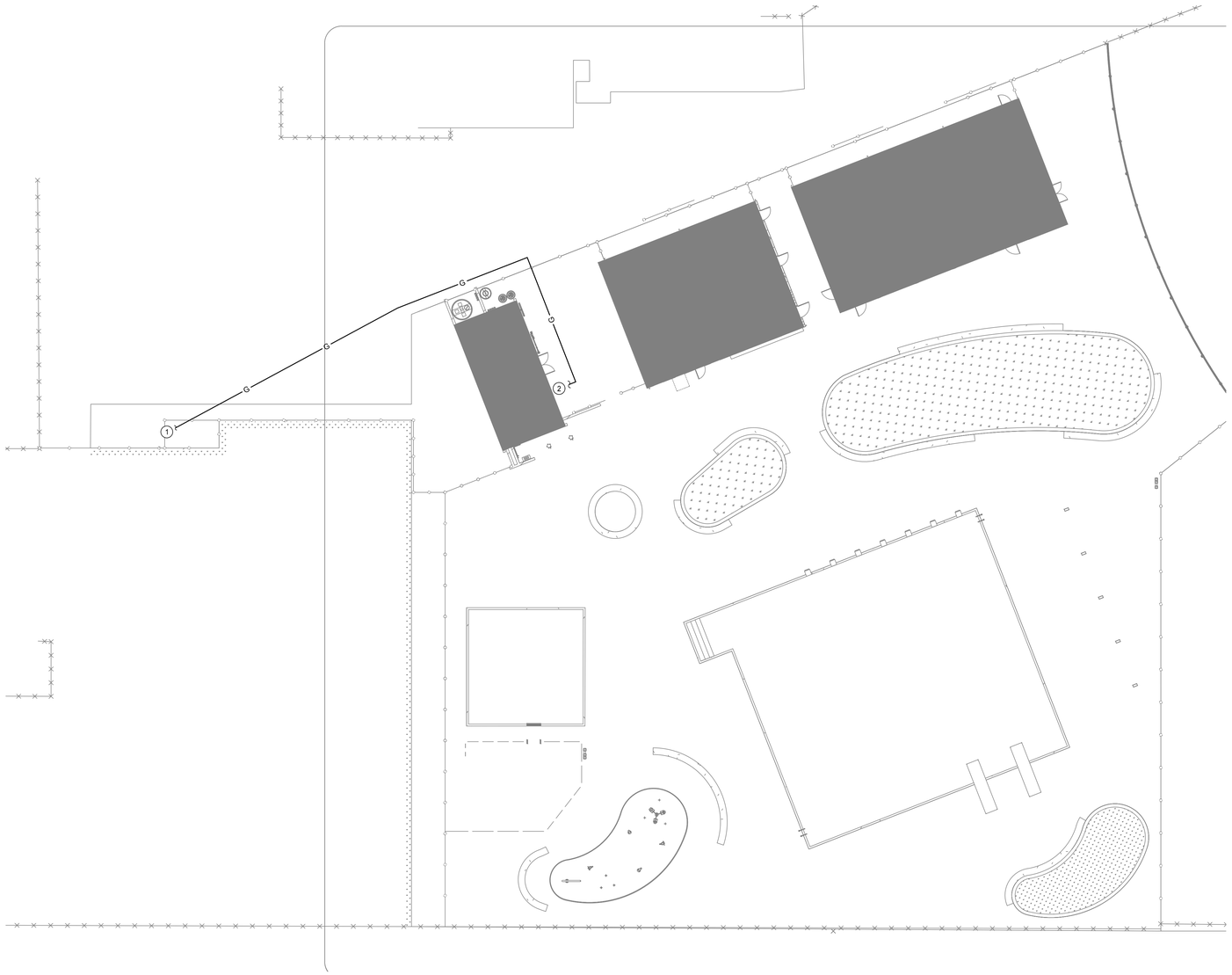

1 BUILDING P - PLUMBING SITE

SCALE: 1/16" = 1'-0"

KEY NOTES

APPLICABLE TO THIS SHEET ONLY	
1	REFER TO CIVIL PLANS FOR CONTINUATION.
2	REFER TO 1/P1.14-1 FOR CONTINUATION.

PLUMBING GENERAL NOTES

APPLICABLE TO THIS SHEET ONLY	
1	SEE PLUMBING FIXTURE SCHEDULE FOR BRANCH PIPE SIZING.
2	SEE GAS RISER DIAGRAM ON SHEET P0.00-1 FOR SIZING, CALCULATIONS AND EQUIPMENT LOADS.

COUNTY OF FRESNO ENVIRONMENTAL HEALTH DIVISION
1221 Fulton Street - 3rd Floor (559) 600-3357
APPROVED
WITH NOTED CORRECTIONS AND
SUBJECT TO FIELD INSPECTIONS
BY: DATE: 8/26/25
APPROVAL OF THIS PLAN DOES NOT CONSTITUTE PERMISSION TO VIOLATE ANY APPLICABLE CITY OR COUNTY ORDINANCE, OR STATE LAW, AND SHALL NOT PREVENT THIS DEPARTMENT FROM REQUIRING CORRECTION OF ERRORS OR OMISSIONS IN PLANS, SPECIFICATIONS OR CONSTRUCTION.

AGD ARCHITECTURE | DESIGN

ANDREW GOODWIN DESIGNS
1238 MONTEREY STREET
SAN LUIS OBISPO, CA 93422
t: (805) 439-1611
www.andrewgoodwin.us

3C | ENGINEERING
SMARTER BUILDINGS BY DESIGN
t: 805.540.3300 w: www.3ceng.com
1 3300 Ruth St. SAN LUIS OBISPO, CA 93401

BY 3C Engineering, Inc., ALL COMMON LAW COPYRIGHT AND OTHER PROPERTY RIGHTS ARE RESERVED TO THIS AN ORIGINAL AND UNPUBLISHED WORK PRODUCT. THIS WORK SHALL NOT BE DISCLOSED OR REPRODUCED OR USED IN CONNECTION WITH ANY WORK OR PROJECT OTHER THAN THE SPECIFIC PROJECT FOR WHICH IT HAS BEEN PREPARED, NOR SHALL IT BE ASSIGNED TO ANY PERSON OR ENTITY WITHOUT OBTAINING THE EXPRESS WRITTEN CONSENT OF VISUAL CONTACT. THIS NOTICE SHALL BE PRESUMED CONCLUSIVE EVIDENCE OF ACCEPTANCE OF THESE RESTRICTIONS.

REVISIONS

REV #	REV DATE	REV DESCRIPTION

SEAL

REGISTERED PROFESSIONAL ENGINEER
BRIAN A. SCHLOSS
No. 34058
Exp. 12/30/26
MECHANICAL
STATE OF CALIFORNIA
NOT FOR CONSTRUCTION

PROJECT

TRANQUILLITY HIGH SCHOOL
AQUATIC CENTER MODERNIZATION
6052 Juanche Ave,
Tranquillity, CA 93668

CLIENT

GOLDEN PLAINS UNIFIED SCHOOL DISTRICT

SHEET TITLE

BUILDING P - SITE PLAN

PHASE DESCRIPTION
100% CD FCHD APPROVAL
SWIMMING POOL

DATE:	8/26/2025
TECHNICIAN:	DS
PROJECT MANAGER:	BS
JOB NUMBER:	791

SHEET NUMBER

P1.00-1

PLOT DATE: 8/6/2025 5:07:30 PM

KEY NOTES

APPLICABLE TO THIS SHEET ONLY

1	REFER TO CIVIL PLANS FOR CONTINUATION.
2	RUN HW & CW BELOW GRADE.
3	3/4" CW, 3/4" HW, AND 3/4"^G TO WATER HEATERS. SEE DETAIL 4/P0.01-1 FOR MORE INFORMATION.
4	REFER TO P1.00 FOR CONTINUATION.
5	(3) 1-1/2" VENTS FROM BELOW. COMBINE 6" ABOVE GRADE.
6	RUN VENTS BELOW GRADE.
7	ROUTE CW PIPE DOWN WALL, LEAVE EXPOSED, AND CONNECT TO ELECTRIC TRAP PRIMER. SEE DETAIL 5/P0001 FOR MORE INFROMATION.
8	COMBINE VENTS 6" ABOVE FINISH GRADE.
9	PROVIDE WITH CONDENSATE NEUTRALIZER. ROUTE CD DRAIN TO FS-1.

PLUMBING GENERAL NOTES

APPLICABLE TO THIS SHEET ONLY

1	SEE PLUMBING FIXTURE SCHEDULE FOR BRANCH PIPE SIZING.
2	PROVIDE ANGLE STOPS FOR ALL PLUMBING FIXTURE BRANCH PIPING LINES.
3	SEE GAS RISER DIAGRAM ON SHEET P0.00-1 FOR SIZING, CALCULATIONS AND EQUIPMENT LOADS.
4	SLOPE VENT PIPING UP TOWARDS VTR MIN 1%.
5	SLOPE CONDENSATE PIPING MIN 1% IN DIRECTION OF FLOW.
6	PLUMBING VENTS SHALL TERMINATE NOT LESS THAN 6" ABOVE THE ROOF, NOR LESS THAN 12" FROM A VERTICAL SURFACE. MAINTAIN 10'-0" CLEARANCE FROM BUILDING AIR INTAKES.
7	REFER TO ARCHITECTURAL SLAB PLAN FOR EXACT LOCATION OF FIXTURES, INCLUDING BUT NOT LIMITED TO FLOOR SINKS, FLOOR DRAINS, TRENCH DRAINS, ROOF DRAINS, ETC. ARCHITECTURAL PLANS SHALL TAKE PRECEDENCE.
8	REFER TO MECHANICAL PLANS FOR LOCATIONS OF MECHANICAL EQUIPMENT AND DUCTWORK. COORDINATE ALL WORK TO FIT IN AVAILABLE SPACE.
9	COORDINATE PIPE ROUTING WITH LOCATION OF ELECTRICAL AND DATA PANELS. PIPING SHALL NOT BE ROUTED ABOVE THE PANELS.

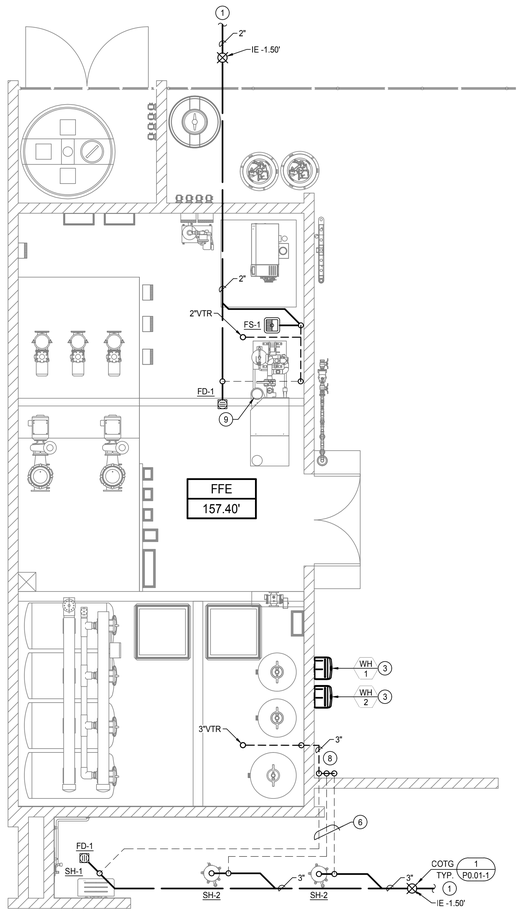

2 BUILDING P - WASTE & VENT

SCALE: 1/4" = 1'-0"

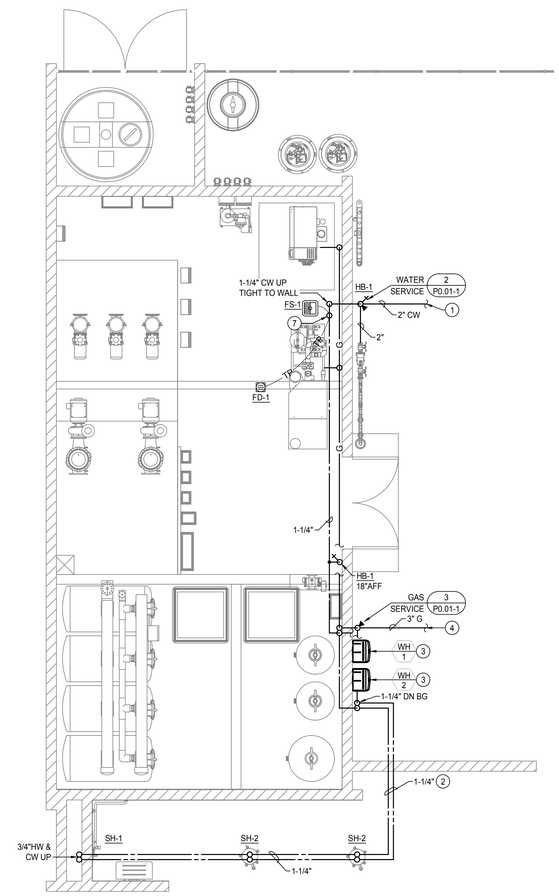

1 BUILDING P - WATER & GAS

SCALE: 1/4" = 1'-0"

COUNTY OF FRESNO ENVIRONMENTAL HEALTH DIVISION
1221 Fulton Street – 3rd Floor (559) 600-3357
APPROVED
WITH NOTED CORRECTIONS AND
SUBJECT TO FIELD INSPECTIONS
BY: DATE: 8/26/25
APPROVAL OF THIS PLAN DOES NOT CONSTITUTE PERMISSION TO VIOLATE ANY APPLICABLE CITY OR COUNTY ORDINANCE, OR STATE LAW, AND SHALL NOT PREVENT THIS DEPARTMENT FROM REQUIRING CORRECTION OF ERRORS OR OMISSIONS IN PLANS, SPECIFICATIONS OR CONSTRUCTION

AGD ARCHITECTURE | DESIGN

ANDREW GOODWIN DESIGNS
1238 MONTEREY STREET
SAN LUIS OBISPO, CA 93422
t: (805) 439-1611
www.andrewgoodwin.us

3C | ENGINEERING
SMARTER BUILDINGS BY DESIGN
t. 805.540.3300 ■ www.3ceng.com
1 3300 Broad St. SAN LUIS OBISPO, CA 93401

© 3C Engineering, Inc. ALL COMMON-LAW COPYRIGHT AND OTHER PROPERTY RIGHTS ARE RESERVED IN THIS AN ORIGINAL AND UNPUBLISHED WORK PRODUCT. THIS WORK SHALL NOT BE DUPLICATED OR DISCLOSED TO OTHERS OR USED IN CONNECTION WITH ANY WORK OR PROJECT OTHER THAN THE SPECIFIC PROJECT FOR WHICH IT HAS BEEN PREPARED, NOR SHALL IT BE ASSIGNED TO OTHERS WITHOUT THE PRIOR OR OBTAINING THE EXPRESS WRITTEN CONSENT OF VISUAL CONTACT. THIS NOTICE SHALL BE CONCLUSIVE EVIDENCE OF ACCEPTANCE OF THESE RESTRICTIONS.

REVISIONS

REV #	REV DATE	REV DESCRIPTION

SEAL

NOT FOR CONSTRUCTION

PROJECT

TRANQUILLITY HIGH SCHOOL
AQUATIC CENTER MODERNIZATION
6052 Juanche Ave,
Tranquillity, CA 93668

CLIENT

GOLDEN PLAINS UNIFIED SCHOOL DISTRICT

SHEET TITLE

BUILDING P - FLOOR PLANS

PHASE DESCRIPTION
100% CD FCHD APPROVAL SWIMMING POOL

DATE: 8/26/2025

TECHNICIAN: DS

PROJECT MANAGER: BS

JOB NUMBER: 791

SHEET NUMBER

P1.14-1

PLOT DATE: 8/6/2025 5:07:31 PM

GENERAL CONSTRUCTION NOTES

1. CONTRACTOR SHALL COMPLY WITH ALL APPLICABLE CODES AND REGULATIONS. MATERIALS AND EQUIPMENT SHALL BE U.L. LISTED AND LABELED FOR THE APPLICATION.
2. THE CONTRACTOR SHALL OBTAIN AND PAY FOR ALL PERMITS, LICENSES AND INSPECTION FEES REQUIRED BY THIS CONTRACT WORK.
3. CONTRACTOR SHALL VISIT THE PROJECT SITE PRIOR TO BIDDING AND ALLOW FOR ALL FIELD CONDITIONS. THE CONTRACTOR SHALL BE RESPONSIBLE FOR ALL ELECTRICAL WORK NOTED AND CALLED OUT ON ALL CONTRACT DOCUMENTS. THE CONTRACTOR SHALL OBTAIN INFORMATION AND BE FAMILIAR WITH ALL OTHER TRADES WORK. THE CONTRACTOR SHALL BE RESPONSIBLE FOR COORDINATION BETWEEN OTHER TRADES ON PROJECT.
4. CONTRACTOR SHALL BE RESPONSIBLE FOR THE SAFETY OF PERSONS AND PROPERTY AND SHALL PROVIDE INSURANCE COVERAGE AS NECESSARY FOR LIABILITY AND PERSONAL, PROPERTY DAMAGE, TO FULLY PROTECT THE OWNER, ARCHITECT AND ENGINEER FROM ANY AND ALL CLAIMS RESULTING FROM THIS WORK.
5. CONTRACTOR SHALL MAINTAIN RECORD DRAWINGS AT THE PROJECT SITE INDICATING ALL MODIFICATIONS TO ELECTRICAL SYSTEMS. THE CONTRACTOR SHALL AT THE CONCLUSION OF THE PROJECT PROVIDE ACCURATE "AS-BUILT" DRAWINGS ACCEPTABLE TO THE ARCHITECT.
6. ALL MATERIALS PROVIDED TO THE PROJECT SHALL BE NEW. THE CONTRACTOR SHALL BE RESPONSIBLE TO PROVIDE AND INSTALL ALL INCIDENTAL MATERIALS REQUIRED FOR A COMPLETE INSTALLATION.
7. CONTRACTOR SHALL PROVIDE TO THE ARCHITECT A CONSTRUCTION SCHEDULE OF ELECTRICAL WORK. THE CONSTRUCTION SCHEDULE SHALL IDENTIFY ALL SIGNIFICANT MILESTONES WITH COMPLETION DATES.
8. CONTRACTOR SHALL PROVIDE ALL REQUIRED "CUTTING, PATCHING, EXCAVATION, BACKFILL AND REPAIRS" NECESSARY TO RESTORE DAMAGED SURFACES TO EQUAL OR BETTER THAN ORIGINAL CONDITIONS EXISTING AT START OF WORK.
9. CONTRACTOR SHALL BE RESPONSIBLE FOR PAINTING ALL EXPOSED CONDUITS AND ELECTRICAL EQUIPMENT. REFER TO ARCHITECTS PAINTING SECTION FOR REQUIREMENTS.
10. ALL ELECTRICAL EQUIPMENT INSTALLED OUTDOORS SHALL BE WEATHERPROOF. EXTERIOR CONDUITS RUN INTO BUILDINGS SHALL BE INSTALLED WITH FLASHING, CAULKED AND SEALED. CONDUITS FOR EXTERIOR ELECTRICAL DEVICES SHALL BE RUN INSIDE BUILDING UNLESS OTHERWISE NOTED ON DRAWINGS.
11. ALL CONDUITS UNLESS OTHERWISE NOTED ON DRAWINGS SHALL HAVE AS A MINIMUM: TWO (2) #12s WITH ONE (1) #12 GROUND. "TICK" MARKS SHOWN ON CIRCUITRY ARE FOR ROUGH ESTIMATING ONLY. THE CONTRACTOR SHALL BE RESPONSIBLE FOR ALL WIRES AND WIRE SIZES REQUIRED BY LATEST CODE.
12. ALL BRANCH CIRCUITS SHALL HAVE INDIVIDUAL NEUTRALS. SHARED NEUTRALS ON MULTIWIRE CIRCUITS IS NOT ALLOWED.
13. ALL 120/277V LIGHT SWITCHES AND WALL OCCUPANT SENSORS SHALL HAVE A NEUTRAL INSTALLED TO THE DEVICE BOX EXCEPT WHERE A CONDUIT OR SURFACE RACEWAY SYSTEM IS INSTALLED.
14. COORDINATE ALL CONDUIT RUNS, ELECTRICAL EQUIPMENT AND PANELS WITH ALL OTHER WORK TO AVOID CONFLICTS.
15. SEE ARCHITECTURAL DOCUMENTS FOR EXACT PLACEMENT OF LIGHTING FIXTURES AND DEVICES. THE ELECTRICAL CONTRACTOR SHALL BE RESPONSIBLE FOR VERIFICATION OF CEILING TYPES FROM ARCHITECTURAL DOCUMENTS AND PROVIDE AND INSTALL ALL REQUIRED FIXTURE MOUNTING HARDWARE. PROVIDE AND INSTALL U.L. LISTED FIRE STOP ENCLOSURES FOR ALL RECESSED FIXTURES IN FIRE RATED CEILINGS.
16. FROM ALL NEW FLUSH MOUNT PANELS; THE CONTRACTOR SHALL STUB UP INTO ACCESSIBLE CEILING SPACE A MINIMUM OF FOUR (4) 3/4" CONDUITS FOR FUTURE USE.
17. CONTRACTOR SHALL, PRIOR TO BID, FIELD VERIFY ALL REQUIREMENTS FOR MODIFYING THE EXISTING CLOCK, DATA, AND INTERCOM SYSTEMS TO ACCOMMODATE ADDITIONS NOTED. THE CONTRACTOR SHALL PROVIDE ALL MATERIALS NEEDED TO MAKE A FULLY OPERATIONAL SYSTEM AT THE CONCLUSION OF PROJECT WORK.
18. CONTRACTOR SHALL PROVIDE IN EVERY NEW EMPTY CONDUIT A DRAW STRING FOR USE IN FUTURE CONSTRUCTION.
19. ALL CONDUIT SHALL BE CONCEALED WHERE POSSIBLE. CUT AND PATCH EXISTING WALLS WHERE NECESSARY. WHERE IT IS NECESSARY TO CUT OR BORE EXISTING STRUCTURAL WALLS FOR NEW ELECTRICAL WORK OBTAIN PERMISSION FROM THE ARCHITECT PRIOR TO STARTING WORK. REUSE EXISTING CONDUIT WHERE POSSIBLE.
20. WHERE IT IS NOT POSSIBLE TO REUSE EXISTING CONDUIT OR RUN NEW CONCEALED CONDUIT USE NON-METALLIC SURFACE RACEWAY AND BOXES. ROUTING OF ALL NON-METALLIC RACEWAYS SHALL BE APPROVED BY THE ARCHITECT OR OWNER'S REPRESENTATIVE PRIOR TO ROUGH-IN.
21. EXTENSION RINGS OR RESET BOXES TO BE FLUSH WITH NEW WALL THICKNESS.
22. CONTRACTOR SHALL BE RESPONSIBLE FOR ALL DAMAGE TO EXISTING UNDERGROUND SYSTEMS (GAS, WATER, TELEPHONE, ELECTRICAL, SEWER, ETC.). THE CONTRACTOR SHALL REPAIR & PAY ALL EXPENSES FOR DAMAGE TO EXISTING UNDERGROUND SYSTEMS AS A RESULT OF NEW WORK. REPAIR TO DAMAGED UNDERGROUND SYSTEMS SHALL BE TO THE OWNERS SATISFACTION WITHOUT EXTRA EXPENSE TO THE OWNER.
23. EXISTING WIRING SHOWN HAS BEEN TAKEN FROM OLD PLANS AND IS ASSUMED TO BE CORRECT. ELECTRICAL CONTRACTOR SHALL FIELD VERIFY ACTUAL CONDITIONS AND MAKE ADJUSTMENTS TO SUIT ACTUAL CONDITIONS AND TO MEET THE INTENT OF THE CONTRACT DOCUMENTS.
24. WHERE NON-METALLIC SHEATHED CONDUCTORS ARE FOUND, THE CONTRACTOR SHALL REMOVE TO FULLEST EXTENT PER THE GENERAL DEMOLITION NOTES AND REPLACE WITH CONDUIT. METAL CLAD CABLE WILL BE PERMITTED ON A CASE-BY-CASE BASIS ONLY BY WRITTEN APPROVAL FROM THE ARCHITECT.
25. ALL INSTALLATION OF EXPOSED SURFACE MOUNTED RACEWAY IN PUBLIC AREAS SHALL BE REVIEWED BY [ARCHITECT] [ELECTRICAL ENGINEER] BEFORE ROUGH-IN. CONTRACTOR IS TO DETERMINE THE ACCESSIBILITY OF ATTIC, FURRED SPACE, HOLLOW MULLIONS, ETC. IN EACH AREA AND REVIEW WITH [ARCHITECT] [ELECTRICAL ENGINEER]. IF SYSTEM CAN BE ROUTED CONCEALED EITHER BY FISHING OR ACCESSIBILITY, CONTRACTOR IS TO DO SO. IF INACCESSIBILITY IS DETERMINED, CONTRACTOR SHALL INSTALL SURFACE MOUNTED RACEWAY IN THE MOST AESTHETICALLY PLEASING MEANS AS DETERMINED BY THE [ARCHITECT] [ELECTRICAL ENGINEER]. NO ALLOWANCE FOR ADDITIONAL COMPENSATION DUE TO ROUTING AS DIRECTED BY THE [ARCHITECT] [ELECTRICAL ENGINEER] WILL BE MADE.
26. CONTRACTOR SHALL COORDINATE WITH UTILITY COMPANIES AND DISTRICT FOR ANY DOWNTIMES.

LIGHT FIXTURE SCHEDULE

FIXTURE NOTES:

1. ALL LED LIGHT FIXTURE BALLASTS/DRIVERS SHALL BE ELECTRONIC TYPE, 10% TOTAL HARMONIC DISTORTION MAXIMUM.
2. ALL LED LIGHT MODULES SHALL BE ENERGY SAVING 3500° K, 80 CRI MINIMUM, U.O.N. (SEE SPECIFICATIONS FOR MORE INFORMATION).
3. ALL LED DRIVERS (AND ASSOC. FIXTS.) SHALL HAVE MANUFACTURER'S CERTIFICATION OF COMPLIANCE WITH CALIFORNIA ENERGY COMMISSION STANDARDS AND REQUIREMENTS, WHERE SUCH ARE USED IN CONDITIONED SPACES.
4. EXIT SIGNS , EMERGENCY LIGHTS AND LIGHT FIXTURES WITH EMERGENCY BATTERY BACK-UP SHALL SUPPLY A MINIMUM DURATION OF 90 MINUTES OF POWER IN THE EVENT OF A POWER OUTAGE/FAILURE.

TYPE	DESCRIPTION	LAMPS	MANUFACTURER
A	7"W x 4'L SUSPENDED LED FIXTURE, FIBERGLASS BODY, .050 ALUMINUM HOUSING, FROSTED RIBBED IMPACT-RESISTANT ACRYLIC DIFFUSER, STAINLESS STEEL LATCHES, FINISH PER ARCHITECT, 0-10V DIMMING DRIVER, 120V.	48W LED 3500°K	H.E. WILLIAMS LIGHTING 96 SERIES
AE	SAME AS FIXTURE TYPE "A" EXCEPT W/ EMERGENCY BATTERY BACK-UP.	48W LED 3500°K	H.E. WILLIAMS LIGHTING 96 SERIES
XA	POLE MOUNTED LED LIGHT FIXTURE HEAD, RECTANGULAR LUMINAIRE HOUSING, 277V. POLE: 12' STEEL POLE	70W 6407 LUMENS 3000K	HESS LIGHTING LINEA 450 G2 SERIES POLE: HESS LIGHTING
XAE	SAME AS FIXTURE "XA" EXCEPT W/ EMERGENCY BATTERY BACK UP	70W 6407 LUMENS 3000K	HESS LIGHTING LINEA 450 G2 SERIES POLE: HESS LIGHTING
XB	12"L x 6"D x 8"W LED WALL SCONCE. DIE CAST ALUMINUM HOUSING, TYPE 2 DISTRIBUTION, 0-10V DIMMING DRIVER, TEXTURED POLYESTER POWDER COAT FINISH, 277V.	23W LED 3000K	GARDCO GWM SERIES
XBE	SAME AS FIXTURE TYPE "XB" EXCEPT WITH EMERGENCY BATTERY BACK-UP	23W LED 3000K	GARDCO GWM SERIES
XC	16" SQUARE X 6"D SURFACE MOUNT LED FIXTURE, 0-10V DIMMING DRIVER, 120V, WET LABEL WITH MARINE GRADE FINISH. ANTI-SEIZE STAINLESS STEEL SCREWS, 277V. (CONTRACTOR SHALL PROVIDE 10% DRIVER OVERSTOCK FOR ALL FIXTURES.)	20W LED 3500K	KENALL LIGHTING MS15 SERIES
XD	48" FIELD CUTTABLE SURFACE MOUNT FLEXIBLE ENCAPSULATED LED STRIP LIGHT, 6" BEND RADIUS, WET LABEL, 24V. UTILIZE CLEAR END CAPS FOR SEAMLESS CONTINUOUS RUNS.	1.5W/FT LED	QTL LIGHTING Q-CAP KURV STATIC WHITE SERIES
XP	POLE MOUNTED LED LIGHT (4) FIXTURE HEADS, HEAVY DUTY DIE-CAST ALUMINUM HOUSING, 277V. POLE: 33' HIGH ROUND TAPERED STEEL POLE	884W LED .	VISIONAIRE LIGHTING BOW-LX-II LED SERIES POLE: KW LIGHTING

ELECTRICAL SYMBOLS & ABBREVIATIONS

SYMBOLS & ABBREVIATIONS SHOWN ARE FOR GENERAL USE. DISREGARD THOSE WHICH DO NOT APPEAR ON THE PLANS.

- FLUORESCENT OR LED LUMINAIRE - SEE SCHEDULE
- EMERGENCY OR NIGHT LIGHT
- STRIP FLUORESCENT OR LED LUMINAIRE - SEE SCHEDULE
- LUMINAIRE - RECESSED - SEE SCHEDULE
- RECESSED WALL WASHER
- LUMINAIRE - SURFACE MOUNTED - SEE SCHEDULE
- LUMINAIRE - POLE OR POST MOUNTED - SEE SCHEDULE
- LUMINAIRE - WALL MOUNTED SEE SCHEDULE
- BOLLARD OR PATH LIGHT - SEE SCHEDULE
- EXIT LIGHT - DIRECTIONAL ARROWS AS INDICATED - SEE SCHEDULE
- TRACK LIGHTING - SEE SCHEDULE
- EMERGENCY LIGHT
- DIGITAL DUAL TECHNOLOGY OCC. SENSOR
- LIGHTING CONTROL OCCUPANCY SENSOR CORNER MOUNTED
- DRC — DIMMER ROOM CONTROLLER
- PC — PLUG LOAD CONTROLLER
- RC — ROOM LIGHTING CONTROLLER
- LCP — LIGHTING CONTROL PANEL
- DL — DIGITAL DAYLIGHT SENSOR
- $ — SINGLE POLE SWITCH **
- $a — SINGLE POLE SWITCH, ** a = CIRCUIT CONTROLLED
- $3 — THREE WAY SWITCH**
- $4 — FOUR WAY SWITCH**
- $M — MANUAL MOTOR STARTER
- $K — KEY OPERATED SWITCH **
- LIGHTING DIMMER**
- DIGITAL ON/OFF SWITCH **
- DIGITAL DIMMER SWITCH **
- DIGITAL MULTI SCENE LIGHTING SWITCH **
- DIGITAL DUAL TECHNOLOGY WALL OCC. SENSOR **
- WALL OCCUPANCY SENSOR **
- DOUBLE SWITCHED WALL OCCUPANCY SENSOR **
- DIMMING DUAL TECHNOLOGY WALL SWITCH OCCUPANCY SENSOR **
- 2-BUTTON DIMMING DUAL TECHNOLOGY WALL SWITCH OCCUPANCY SENSOR **
- SECURITY DOOR CONTACTS
- MD — SECURITY MOTION DETECTOR
- SC — CCTV CAMERA
- KP — SECURITY SYSTEM KEYPAD
- DOOR BELL PUSHBUTTON
- CH — DOOR CHIME WITH LED
- RECEPTACLE - DUPLEX *
- DUPLEX RECEPTACLE MOUNTED ABOVE COUNTER - FIELD VERIFY HEIGHT
- GFCI CONVENIENCE RECEPTACLE - DUPLEX*
- GFCI CONVENIENCE DUPLEX RECEPTACLE MOUNTED ABOVE COUNTER - FIELD VERIFY HEIGHT
- RECEPTACLE DOUBLE DUPLEX*
- HALF SWITCHED DUPLEX RECEPTACLE *
- SINGLE RECEPTACLE*
- DUPLEX RECEPTACLE - CEILING MOUNTED
- HC — LETTER INDICATES DUPLEX HALF CONTROLLED RECEPTACLE *
- C — LETTER INDICATES DUPLEX FULLY CONTROLLED RECEPTACLE *
- FLOOR MOUNTED DUPLEX RECEPTACLE
- FLOOR MOUNTED BOX
- POWER OUTLET - SEE PLANS FOR NEMA TYPE*
- POWER POLE
- WALL TELEPHONE OUTLET **
- [#] VOICE/DATA WALL OUTLET *
- [#] VOICE/DATA OUTLET MOUNTED ABOVE COUNTER - FIELD VERIFY HEIGHT
- [#] SURFACE MOUNTED VOICE/DATA WALL OUTLET *
- [#] SURFACE MOUNTED VOICE/DATA OUTLET MOUNTED ABOVE COUNTER - FIELD VERIFY HEIGHT
- WIRELESS ACCESS POINT (WAP) - CEILING MOUNTED
- WIRELESS ACCESS POINT (WAP) - WALL MOUNTED - FIELD VERIFY HEIGHT
- [#] VOICE/DATA OUTLET - FLOOR MOUNTED
- TV OUTLET *
- [#] VOICE/DATA OUTLET - CEILING MOUNTED
- S — INTERIOR SPEAKERS CEILING MOUNTED
- S — INTERIOR SPEAKERS WALL MOUNTED
- C — CLOCK +8'-0" AFF U.O.N. VERIFY BEFORE INSTALLATION
- PANELBOARD - FLUSH MOUNTED
- EQUIPMENT PANEL - FLUSH MOUNTED
- PANELBOARD - SURFACE MOUNTED
- EQUIPMENT PANEL - SURFACE MOUNTED
- M — METER W/ CURRENT TRANSFORMER
- J — JUNCTION BOX - CEILING OR WALL MOUNTED, SIZE PER CODE, TAPE AND TAG WIRES
- MOTOR CONNECTION
- NON-FUSED DISCONNECT SWITCH
- FUSED DISCONNECT SWITCH; FUSED WITH DUAL-ELEMENT FUSES SIZED PER EQUIPMENT MFGR'S NAMEPLATE DATA
- COMBINATION STARTER/FUSED DISCONNECT SWITCH; FUSED DISCONNECT SWITCH ELEMENT FUSES SIZED PER EQUIPMENT MFGRS NAMEPLATE DATA
- MAGNETIC STARTER - NEMA SIZE INDICATED NEMA 3R ENCLOSURE UNLESS OTHERWISE SPECIFIED
- CIRCUIT BREAKER
- GROUND ROD WITH GROUNDWELL BOX
- GROUND ELECTRODE
- NORMALLY OPEN CONTACT
- NORMALLY CLOSED CONTACT
- TRANSFORMER - SEE SINGLE LINE FOR SIZE
- PULLBOX
- ERMS
- FLEX CONDUIT WITH CONNECTION
- CONDUIT - UP
- CONDUIT - DOWN
- E — CONDUIT EMERGENCY SYSTEM
- LV — LOW VOLTAGE WIRING
- SURFACE METAL OR NON-METALLIC RACEWAY
- CONDUIT - CONCEALED IN WALLS OR CEILING
- CONDUIT - EXISTING
- CONDUIT - BELOW SLAB OR UNDERGROUND: 3/4"MIN.
- CAPPED OR STUB-OUT CONDUIT
- CONDUIT CONTINUATION
- #10 — CONDUIT - HOME RUN TO PANEL, TERMINAL CABINET, ETC. RUNS MARKED WITH CROSSHATCHES INDICATE NUMBER OF #12 AWG WIRES WHEN MORE THAN TWO. SIZE CONDUIT ACCORDING TO SPECIFICATIONS AND APPLICABLE CODE. CROSS HATCHES WITH NUMBER ADJACENT INDICATES WIRE SIZE OTHER THAN #12 AWG.
- 2 — SHEET NOTE REFERENCE SYMBOL; SEE ASSOCIATED NOTE ON SAME SHEET
- 3 — SCHEDULE SYMBOL; SEE ASSOCIATED NOTE ON SAME SHEET
- X — DETAIL NOTE REFERENCE SYMBOL SEE ASSOCIATED NOTE ON SAME DETAIL
- FXXX — FEEDER DESIGNATION; SEE ASSOCIATED NOTE ON SAME DETAIL
- X / X.XX — DETAIL NUMBER; DETAIL OR SECTION REFERENCE; SHEET NUMBER
- X / X — INDICATES QUANTITY OF TELEPHONE OUTLETS; INDICATES QUANTITY OF DATA OUTLETS

ABBREVIATIONS

A	AMPERE	GFCI GFI	GROUND FAULT INTERRUPTING	NTS	NOT TO SCALE
AFF	ABOVE FINISHED FLOOR	GND, G	GROUND	OAH	OVERALL HEIGHT
ALUM/AL	ALUMINUM	GRS	GALVANIZED RIGID STEEL	OC	ON CENTER
ARCH	ARCHITECT	HT	HEIGHT	OH	OVERHEAD
AWG	AMERICAN WIRE GAUGE	IC	INTERCOM	OFCI	OWNER FURNACED CONTRACTOR INSTALLED
BKR	BREAKER	IDF	INTERMEDIATE DISTRIBUTION FRAME	PA	PUBLIC ADDRESS
C	CONDUIT	INCAND	INCANDESCENT	PB	PULL BOX
CATV	CABLE TV	JB	JUNCTION BOX	PF	POWER FACTOR
CB	CIRCUIT BREAKER	KV	KILOVOLT	PH	PHASE
CCTV	CLOSED CIRCUIT TV	KVA	KILOVOLT AMPERES	PIR	PASSIVE INFRARED
CKT	CIRCUIT	KW	KILOWATT	PNL	PANEL
CL	CENTER LINE	LCP	LIGHTING CONTROL PANEL	PV	PHOTOVOLTAIC
CLG	CEILING	LTG	LIGHTING	PVC	POLYVINYL CHLORIDE
C.O.	CONDUIT ONLY	LV	LOW VOLTAGE	PWR	POWER
CTR	CENTER	KCM	THOUSAND CIRCULAR MILS	(R)	RELOCATE
D	DIMMER	M.B.	MAIN CIRCUIT BREAKER	(RP)	REMOVABLE POLE
DIM	DIMENSION	MCA	MINIMUM CIRCUIT AMPS	RECPT'S	RECEPTACLES
DIST	DISTRIBUTION	MDF	MAIN DISTRIBUTION FRAME	REQD	REQUIRED
(E)	EXISTING	MECH	MECHANICAL	REQMT'S	REQUIREMENT(S)
EC	ELECTRICAL CONTRACTOR	MH	METAL HALIDE	SHT	SHEET
(EL)	EVENING LIGHT	MLO	MAIN LUGS ONLY	SLD	SINGLE LINE DIAGRAM
EM	EMERGENCY	MPOE	MAIN POINT OF ENTRANCE	STC	SYSTEMS TERMINATION CABINET
EMT	ELECTRICAL METALLIC TUBING	MTD	MOUNTED	SW	SWITCH
ERMS	ENERGY REDUCTION MAINTENANCE SWITCH	MTG	MOUNTING	SWBD	SWITCHBOARD
EQUIP	EQUIPMENT	MOCP	MAXIMUM OVER CURRENT PROTECTION	TTB	TELEPHONE TERMINAL BACKBOARD
EV	ELECTRICAL VEHICLE	(N)	NEW	TYP	TYPICAL
FA	FIRE ALARM	NIC	NOT IN CONTRACT	UON	UNLESS OTHERWISE NOTED
FACP	FIRE ALARM CONTROL PANEL	NIEC	NOT IN ELECTRICAL CONTRACT	UG	UNDERGROUND
FC	FOOT CANDLE	(NL)	NIGHT LIGHT	V	VOLT
FIN	FINISH	NO.	NUMBER	VD	VOLTAGE DROP
FL	FLOOR	NOM	NOMINAL	W	WATT
FLA	FULL LOAD AMPS			W/	WITH
FLUOR	FLUORESCENT			WP	WEATHERPROOF
(F)	FUTURE			XFMR	TRANSFORMER
GC	GENERAL CONTRACTOR				

FIRE ALARM

NOTE: SEE FIRE ALARM DRAWINGS FOR QUANTITIES AND MOUNTING HEIGHTS.

- P — MANUAL PULL STATION
- STROBE ONLY
- SPEAKER ONLY
- M — MINI HORN
- SPEAKER/STROBE
- CHIME/STROBE
- HEAT DETECTOR
- SMOKE DETECTOR
- CO — CARBON MONOXIDE ALARM
- DUCT SMOKE DETECTOR
- TAMPER SWITCH
- FLOW SWITCH
- POST INDICATING VALVE
- FIRE SMOKE DAMPER
- BELL (GONG)
- FCP — FIRE ALARM CONTROL PANEL
- DH — DOOR HOLDER
- APS — AUXILIARY POWER SUPPLY
- FSA — FIRE SYSTEM ANNUNCIATOR
- FTR — FIRE ALARM TRANSPONDER OR TRANSMITTER
- ESR — ELEVATOR STATUS/RECALL
- FAC — FIRE ALARM COMMUNICATOR
- ANN — REMOTE ANNUNCIATORS
- EOL — END OF LINE

* +15" A.F.F. MIN. TO BOTTOM OF BOX, U.O.N.
** +48" A.F.F. MAX. TO TOP OF BOX, U.O.N.
[#] NUMBER IN BRACKETS DENOTES NUMBER OF CABLE DROPS WHEN MORE THAN (2).

EQUIPMENT ANCHORAGE

M/E/P COMPONENT ANCHORAGE NOTES:

ALL MECHANICAL, PLUMBING, AND ELECTRICAL COMPONENTS SHALL BE ANCHORED AND INSTALLED PER THE DETAILS ON THE DSA-APPROVED CONSTRUCTION DOCUMENTS. THE FOLLOWING COMPONENTS SHALL BE ANCHORED OR BRACED TO MEET THE FORCE AND DISPLACEMENT REQUIREMENTS PRESCRIBED IN THE 2022 CBC SECTIONS 1617A.1.18 THROUGH 1617A.1.26 AND ASCE 7-16 CHAPTERS 13, 26, AND 30:

1. ALL PERMANENT EQUIPMENT AND COMPONENTS.
2. TEMPORARY, MOVABLE OR MOBILE EQUIPMENT THAT IS PERMANENTLY ATTACHED (e.g. HARD WIRED) TO THE BUILDING UTILITY SERVICES SUCH AS ELECTRICITY, GAS OR WATER. "PERMANENTLY ATTACHED" SHALL INCLUDE ALL ELECTRICAL CONNECTIONS EXCEPT PLUGS FOR 110 / 220 VOLT RECEPTACLES HAVING A FLEXIBLE CABLE.
3. TEMPORARY, MOVABLE OR MOBILE EQUIPMENT WHICH IS HEAVIER THAN 400 POUNDS OR HAS A CENTER OF MASS LOCATED 4 FEET OR MORE ABOVE THE ADJACENT FLOOR OR ROOF LEVEL THAT DIRECTLY SUPPORT THE COMPONENT IS REQUIRED TO BE RESTRAINED IN A MANNER APPROVED BY DSA.

THE FOLLOWING MECHANICAL AND ELECTRICAL COMPONENTS SHALL BE POSITIVELY ATTACHED TO THE STRUCTURE, BUT NEED NOT BE DETAILED IN THE PLANS. THESE COMPONENTS SHALL HAVE FLEXIBLE CONNECTIONS PROVIDED BETWEEN THE COMPONENT AND ASSOCIATED DUCTWORK, PIPING AND CONDUIT. FLEXIBLE CONNECTIONS MUST ALLOW MOVEMENT IN BOTH TRANSVERSE AND LONGITUDINAL DIRECTIONS.

A. COMPONENTS WEIGHTING LESS THAN 400 POUNDS AND HAVE A CENTER OF MASS LOCATED 4 FEET OR LESS ABOVE THE ADJACENT FLOOR OR ROOF LEVEL THAT DIRECTLY SUPPORT THE COMPONENT.
B. COMPONENTS WEIGHTING LESS THAN 20 POUNDS, OR IN THE CASE OF DISTRIBUTED SYSTEMS, LESS THAN 5 POUNDS PER FOOT, WHICH ARE SUSPENDED FROM A ROOF OR FLOOR OR HUNG FROM A WALL.

THE ANCHORAGE OF ALL MECHANICAL, ELECTRICAL AND PLUMBING COMPONENTS SHALL BE SUBJECT OF THE APPROVAL OF THE DESIGN PROFESSIONAL IN GENERAL RESPONSIBLE CHARGE OR STRUCTURAL ENGINEER DELEGATED RESPONSIBILITY AND ACCEPTANCE BY DSA. THE PROJECT INSPECTOR WILL VERIFY THAT ALL COMPONENTS AND EQUIPMENT HAVE BEEN ANCHORED IN ACCORDANCE WITH ABOVE REQUIREMENTS.

MEP DISTRIBUTION SYSTEM BRACING NOTE FOR PIPING, DUCTWORK, AND ELECTRICAL CONDUIT

PIPING, DUCTWORK AND ELECTRICAL DISTRIBUTION SYSTEMS SHALL BE BRACED TO COMPLY WITH THE FORCES AND DISPLACEMENTS PRESCRIBED IN ASCE 7 SECTION 13.3 AS DEFINED IN ASCE 7 SECTION 13.6.5, 13.6.6, 13.6.7, 13.6.8 AND 2022 CBC SECTIONS 1617A.1.24, 1617A.1.25 AND 1617A.1.26.

THE METHOD OF SHOWING BRACING AND ATTACHMENTS TO THE STRUCTURE FOR THE IDENTIFIED DISTRIBUTION SYSTEM ARE AS NOTED BELOW. WHEN BRACING AND ATTACHMENTS ARE BASED ON PRE-APPROVED INSTALLATION GUIDE (E.G., HCAI OPM FOR 2013 CBC OR LATER), COPIES OF THE BRACING OF THE DISTRIBUTION SYSTEMS. THE STRUCTURAL ENGINEER OF RECORD SHALL VERIFY THE ADEQUACY OF THE STRUCTURE TO SUPPORT THE HANGER AND THE BRACE LOADS.

MECHANICAL PIPING (MP), MECHANICAL DUCTS (MD), PLUMBING PIPING (PP), ELECTRICAL DISTRIBUTION SYSTEMS (E):

MP ☐ MD ☐ PP ☐ E ☐ - OPTION 1: DETAILED ON THE APPROVED DRAWINGS WITH PROJECT SPECIFIC NOTES & DETAILS.

MP ☐ MD ☐ PP ☐ E ■ - OPTION 2: SHALL COMPLY WITH HCAI (OSHPD) PRE-APPROVAL (OPM #) #______________, AS INCLUDED IN THESE DRAWINGS WITH PROJECT-SPECIFIC NOTES AND DETAILS.

APPLICABLE CODES & STANDARDS

CODES:

1. 2025 CALIFORNIA ADMINISTRATIVE CODE C.A.C., PART 1, TITLE 24, C.C.R.
2. 2022 CALIFORNIA BUILDING CODE (CBC) C.C.R., TITLE 24, VOL. 1 & 2 BASED ON THE 2021 INTERNATIONAL BUILDING CODE (IBC) WITH CALIFORNIA AMENDMENTS.
3. 2022 CALIFORNIA RESIDENTIAL CODE C.C.R., TITLE 24, PART 2.5 BASED ON THE 2021 INTERNATIONAL RESIDENTIAL CODE WITH CALIFORNIA AMENDMENTS.
4. 2022 CALIFORNIA ELECTRICAL CODE (CEC) C.C.R., TITLE 24, PART 3 BASED ON THE 2020 NATIONAL ELECTRICAL CODE (NEC) WITH CALIFORNIA AMENDMENTS.
5. 2022 CALIFORNIA MECHANICAL CODE (CMC) C.C.R., TITLE 24, PART 4 BASED ON THE 2021 UNIFORM MECHANICAL CODE (UMC) WITH CALIFORNIA AMENDMENTS.
6. 2022 CALIFORNIA PLUMBING CODE (CPC) C.C.R., TITLE 24, PART 5 BASED ON THE 2021 UNIFORM PLUMBING CODE (UPC) WITH CALIFORNIA AMENDMENTS.
7. 2022 CALIFORNIA ENERGY CODE C.C.R., TITLE 24, PART 6.
8. 2022 CALIFORNIA FIRE CODE (CFC) C.C.R., TITLE 24, PART 9 BASED ON THE 2021 INTERNATIONAL FIRE CODE (IFC) WITH CALIFORNIA AMENDMENTS.
9. 2022 CALIFORNIA GREEN BUILDING STANDARDS CODE C.C.R., TITLE 24, PART 11.
10. 2022 CALIFORNIA REFERENCED STANDARDS CODE C.C.R., TITLE 24, PART 12.
11. TITLE 19 C.C.R., PUBLIC SAFETY, STATE FIRE MARSHAL REGULATIONS.
12. NATIONAL FIRE ALARM CODE (NFPA 72) 2022.

STANDARDS:

1. AMERICAN NATIONAL STANDARDS INSTITUTE (ANSI)
2. ELECTRONICS INDUSTRIES ASSOCIATION (EIA)
3. INSTITUTE OF ELECTRICAL AND ELECTRONIC ENGINEERS (IEEE)
4. NATIONAL ELECTRICAL MANUFACTURERS ASSOCIATION (NEMA)
5. NATIONAL ELECTRICAL TESTING ASSOCIATION (NETA)
6. UNDERWRITER LABORATORIES (UL)
7. CALIFORNIA OCCUPATIONAL SAFETY AND HEALTH ACT STANDARDS (CAL/OSHA)

SHEET INDEX

E001-1	SYMBOLS, ABBREVIATIONS, LIGHT FIXTURE SCHEDULE, CODES, STANDARDS & SHEET INDEX.
E002-1	CALIFORNIA ENERGY COMPLIANCE TITLE 24 - INDOOR.
E003-1	CALIFORNIA ENERGY COMPLIANCE TITLE 24 - OUTDOOR.
E101-1	ELECTRICAL SINGLE LINE DIAGRAM, DETAILS
E102-1	PANELBOARD SCHEDULES.
E201-1	OVERALL SITE PLAN.
E202-1	ENLARGED SITE PLAN
E301-1	DEMOLITION SITE PLAN.
E401-1	BUILDING P - POWER & LIGHTING PLAN.
E601-1	ELECTRICAL DETAILS.
E602-1	ELECTRICAL DETAILS.
E603-1	ELECTRICAL DETAILS.
FA001-1	SYMBOLS & ABBREVIATIONS, EQUIPMENT LIST, OPERATIONAL MATRIX, CALCS, DETAILS & NOTES.
FA101-1	FIRE ALARM RISER DIAGRAM, BATTERY & VOLTAGE DROP CALCULATIONS.
FA201-1	FIRE ALARM SITE PLAN.
FA401-1	BUILDING P - FIRE ALARM PLAN.

COUNTY OF FRESNO ENVIRONMENTAL HEALTH DIVISION
1221 Fulton Street – 3rd Floor (559) 600-3357
APPROVED
WITH NOTED CORRECTIONS AND SUBJECT TO FIELD INSPECTIONS
BY: ______ DATE: 8/26/25
APPROVAL OF THIS PLAN DOES NOT CONSTITUTE PERMISSION TO VIOLATE ANY APPLICABLE CITY OR COUNTY ORDINANCE, OR STATE LAW, AND SHALL NOT PREVENT THIS DEPARTMENT FROM REQUIRING CORRECTION OF ERRORS OR OMISSIONS IN PLANS, SPECIFICATIONS OR CONSTRUCTION.

AGD ARCHITECTURE | DESIGN

ANDREW GOODWIN DESIGNS
1238 MONTEREY STREET
SAN LUIS OBISPO, CA 93422
t: (805) 439-1611
www.andrewgoodwin.us

AURUM CONSULTING ENGINEERS MONTEREY BAY, INC.
Project No. 24-160.00
404 W. Franklin St. • Suite 100 • Monterey, CA 93940
T.831.646.3330 • F.831.646.3336 • www.acemb.com

These drawings are instruments of service and are the property of AURUM CONSULTING ENGINEERS MONTEREY BAY, INC. All designs and other information in the drawings are for use on the specified project and shall not be used otherwise without the expressed written permission of AURUM CONSULTING ENGINEERS MONTEREY BAY, INC.

These drawings are instruments of service and are the property of Andrew Goodwin Designs, Inc. The information represented on these drawings are exclusively for the project indicated and shall not be transferred or otherwise reproduced without express written permission of Andrew Goodwin. Copyright 2023

REVISIONS

REV # | REV DATE | REV DESCRIPTION

SEAL

REGISTERED PROFESSIONAL ENGINEER No. E2... EXP. .../27 ELECTRICAL STATE OF CALIFORNIA

NOT FOR CONSTRUCTION

PROJECT

TRANQUILLITY HIGH SCHOOL
AQUATIC CENTER MODERNIZATION
6052 Juanche Ave,
Tranquillity, CA 93668

CLIENT

GOLDEN PLAINS UNIFIED SCHOOL DISTRICT

SHEET TITLE
SYMBOLS, ABBREVIATIONS, LIGHT FIXTURE SCHEDULE, CODES, STANDARDS & SHEET INDEX.

PHASE DESCRIPTION
100% CD FCHD APPROVAL SWIMMING POOL

DATE: 8/26/2025
TECHNICIAN: RT
PROJECT MANAGER: TP
JOB NUMBER: 791

SHEET NUMBER
E001-1

PLOT DATE: 3/21/2025 3:26:20 PM

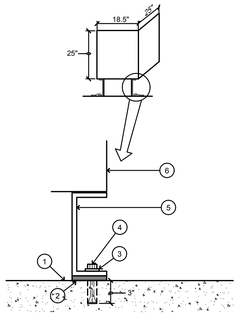

MAX WEIGHT. OF TRANSFORMER = 525 LBS.

DETAIL NOTES

1. CONCRETE FLOOR.
2. KORFUND ISOLATION PAD
3. LOCK WASHER
4. ½" DIA. STAINLESS STEEL HILTI KB-TZ2 ANCHOR W/ 3" NOMINAL EMBEDMENT, TYP. AT EA. MOUNTING HOLE (4 PLACES). INSTALL IN CONFORMANCE WITH ICC ESR-4266. SEE SHEET S1.03-1 FOR REQUIRED INSTALLATION TORQUE.
5. TRANSFORMER MOUNTING CHANNEL
6. TRANSFORMER HOUSING

7 TRANSFORMER "TPH" MOUNTING DETAIL

NO SCALE

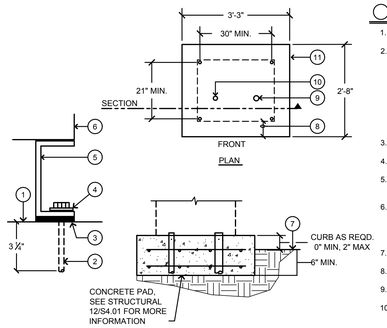

DETAIL NOTES:

1. CONCRETE PAD.
2. 1/2" DIA. STAINLESS STEEL HILTI KB-TZ2 ANCHOR W/ 3" NOMINAL EMBEDMENT, TYP. AT EA. MOUNTING HOLE (4 PLACES). MAINTAIN MINIMUM 3" OF CONCRETE EDGE DISTANCE TO ANY CONCRETE EDGE. INSTALL IN CONFORMANCE WITH ICC ESR-4266. SEE SHEET S1.03-1 FOR REQUIRED INSTALLATION TORQUE.
3. KORFUND ISOLATION PAD.
4. LOCK WASHER.
5. TRANSFORMER MOUNTING CHANNEL.
6. TRANSFORMER HOUSING. XFMR BY MFR MAX OPERATION WEIGHT = 1350 lbs. MAX HEIGHT TO CENTER OF GRAVITY = 28".
7. FINISHED GRADE.
8. EQUIPMENT CENTERED ON PAD.
9. SECONDARY CONDUIT.
10. PRIMARY CONDUIT.

3 DRY TYPE XFMR "TDH" MOUNTING DETAIL

NO SCALE

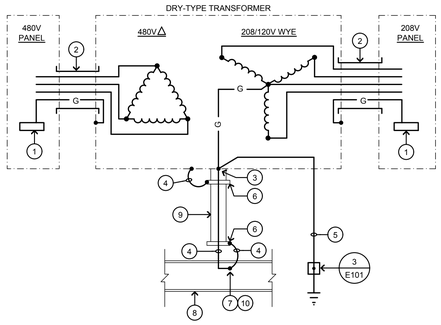

DETAIL NOTES:

1. PANEL OR SWITCHBOARD EQUIPMENT GROUND BUS.
2. CONDUIT WITH SEAL-TITE FLEX CONNECTION TO TRANSFORMER.
3. TRANSFORMER CASE BOND.
4. BARE COPPER GROUND PER CEC 250-66
5. 1" SCHEDULE 80 PVC CONDUIT WITH BARE COPPER GROUNDING ELECTRODE CONDUCTOR, SEE SINGLE LINE DIAGRAM 1/E101 FOR REQUIREMENTS.
6. GROUNDING BUSHINGS.
7. BOLTED OR EXOTHERMIC WELD CONNECTION.
8. BUILDING STEEL STRUCTURE FRAMING.
9. ELECTRICAL METALLIC TUBING (EMT).
10. METAL COLD WATER PIPE PER CEC 250.30 OR OTHER ELECTRODES PER 250.50 IF BUILDING STEEL OR WATER PIPE ARE NOT AVAILABLE.

2 DRY TYPE XFMR GROUNDING DETAIL

NO SCALE

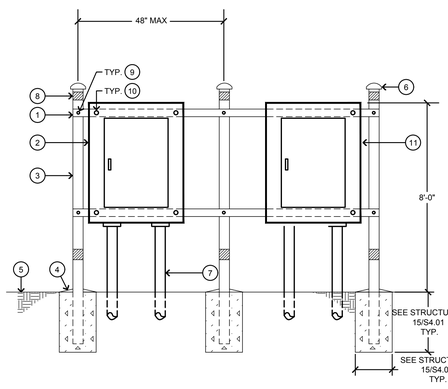

DETAIL NOTES:

1. UNISTRUT P1000 (SHALL BE SOLID TYPE, NOT SLOTTED), (TYP. 2 PLACES) FILE AND SMOOTH ALL SHARP EDGES. MEMBERS SHALL HAVE A HOT DIP GALVANIZED FINISH.
2. DIST. PANEL. "DH". MAX WEIGHT 700LBS.
3. GALVANIZED STEEL PIPE COLUMN PER 15/S4.01 (TYP. 3).
4. CONC. BASE, SLOPE AWAY FROM PIPE (TYP.)
5. FINISHED GRADE
6. GALVANIZED THREADED STEEL CAP (TYP.)
7. CONDUITS; SEE PLANS FOR QUANTITIES (TYP.)
8. 3" REFLECTOR TAPE TOP & BOTTOM (TYP.)
9. SEE 15/S4.01 FOR CONNECTION OF UNISTRUT TO STEEL PIPE.
10. 3/8"-16 x 1 1/8"L UNISTRUT STUD NUTS WITH FLAT WASHER & HEX NUT (TYP. (4) PANEL). ALL FASTENING HARDWARE SHALL HAVE A HOT DIP GALVANIZED FINISH.
11. DIST. PANEL "DL". MAX WEIGHT 700LBS.

6 PANELS "DH" & "DL" MOUNTING DETAIL

NO SCALE

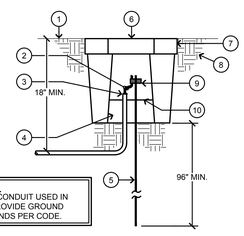

GENERAL NOTE:
WHERE METAL CONDUIT USED IN LIEU OF PVC, PROVIDE GROUND BUSHINGS & BONDS PER CODE.

DETAIL NOTES:

1. FINISHED GRADE.
2. GROUND CONDUCTOR. (SEE SINGLE LINE DIAGRAM ON 1/E101 FOR GROUND CONDUCTOR SIZES).
3. SEAL CONDUIT WATERTIGHT.
4. GROUT BOTTOM MINIMUM 3".
5. ¾" x 10'-0" COPPER CLAD GROUND ROD.
6. LID LABELED "GROUND ROD".
7. CHRISTY "F8" GROUND ROD BOX.
8. UNDISTURBED EARTH.
9. GROUND CLAMP.
10. COAT ALL INSIDE SURFACES WITH SEALANT.

5 GROUND ROD BOX DETAIL

NO SCALE

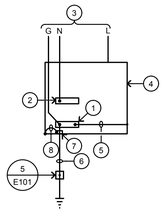

DETAIL NOTES:

1. GROUND BUS.
2. NEUTRAL BUS.
3. TO TRANSFORMER OR MAIN SWITCHBOARD.
4. DISTRIBUTION PANEL.
5. EQUIPMENT BONDING JUMPER SUPPLIED WITH PANEL INSTALLED BY CONTRACTOR.
6. 1" SCHEDULE 80 PVC CONDUIT [WITH 1 (#4) (#2) (#1/0) (#2/0) (#3/0) GROUNDING ELECTRODE CONDUCTOR] [SEE SINGLE LINE DIAGRAM1/E1.1 FOR GROUNDING ELECTRODE CONDUCTOR REQUIREMENTS].
7. BARE COPPER GROUND PER CEC 250-66.
8. GROUNDING BUSHING.

GENERAL NOTE:
IF AVAILABLE ON THE PREMISES AT EACH BUILDING OR STRUCTURE SERVED EACH OF THE FOLLOWING SHALL BE BONDED TOGETHER TO FORM THE GROUNDING ELECTRODE SYSTEM:
a. METAL COLD WATER PIPE,
b. METAL FRAME OF BUILDING,
c. GROUND RING,
d. OTHER ELECTRODES PER CEC 250.50

4 DISTRIBUTION PANEL GROUNDING

NO SCALE

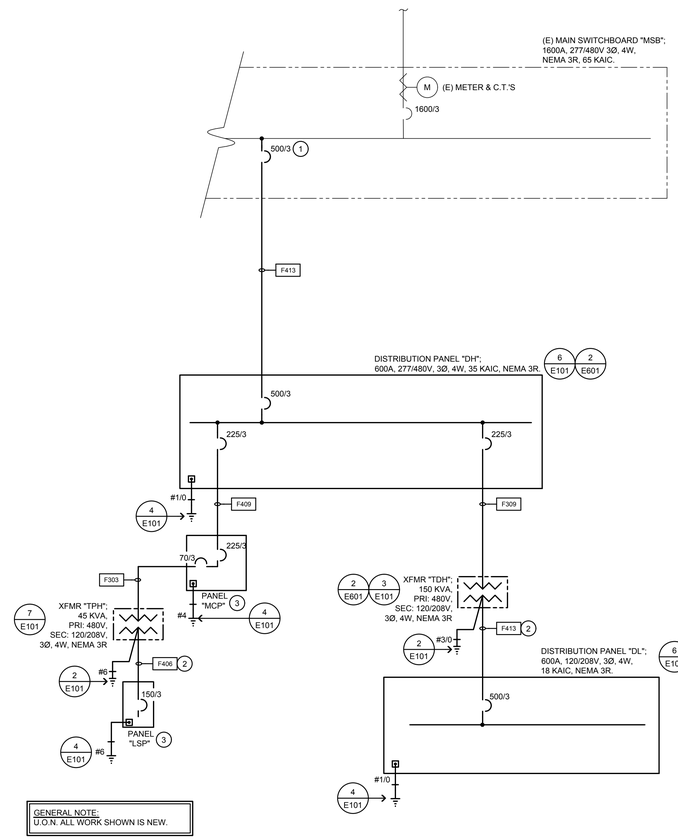

GENERAL NOTE:
U.O.N. ALL WORK SHOWN IS NEW.

COUNTY OF FRESNO ENVIRONMENTAL HEALTH DIVISION
1221 Fulton Street - 3rd Floor (559) 600-3357
APPROVED WITH NOTED CORRECTIONS AND SUBJECT TO FIELD INSPECTIONS
BY _____ DATE 8/26/25
APPROVAL OF THE PLAN DOES NOT CONSTITUTE PERMISSION TO VIOLATE ANY APPLICABLE CITY OR COUNTY ORDINANCE OR STATE LAW AND SHALL NOT PREVENT THIS DEPARTMENT FROM REQUIRING CORRECTION OF ERRORS OR OMISSIONS IN PLANS, SPECIFICATIONS OR CONSTRUCTION.

DETAIL NOTES:

1. NEW BREAKER IN EXISTING SWITCHBOARD. PROVIDE & INSTALL ALL REQUIRED MOUNTING HARDWARE FOR NEW BREAKER.
2. SECONDARY SHALL NOT EXCEED 10' IN LENGTH.
3. PROVIDED BY POOL VENDOR. INSTALL BY ELECTRICAL CONTRACTOR.

SINGLE LINE DIAGRAM LEGEND

	(EXISTING)
	(NEW)
	(E) FLOOR/PAD MOUNTED EQUIPMENT
	(N) FLOOR/PAD MOUNTED EQUIPMENT

FEEDER SCHEDULE

DESIGNATION	AMPACITY	CONDUIT & CONDUCTORS SIZES
F303	70	1 1/4" C., 3 #4 & 1 #8 GND.
F309	225	2" C., 3 #4/0 & 1 #4 GND.
F406	150	2" C., 4 #1/0 & 1 #6 GND.
F409	225	2 1/2" C., 4 #4/0 & 1 #4 GND.
F413	500	(2) 3 1/2" C., EACH W/4 #350kcm & 1 #1/0 GND (PARALLEL).

1 ELECTRICAL SINGLE LINE DIAGRAM

NO SCALE

AGD ARCHITECTURE | DESIGN

ANDREW GOODWIN DESIGNS
1238 MONTEREY STREET
SAN LUIS OBISPO, CA 93422
t: (805) 439-1611
www.andrewgoodwin.us

AURUM CONSULTING ENGINEERS MONTEREY BAY, INC.
Project No. 24-160.00
404 W. Franklin St. • Suite 100 • Monterey, CA 93940
T.831.646.3330 • F.831.646.3336 • www.acemb.com

These drawings are instruments of service and are the property of AURUM CONSULTING ENGINEERS MONTEREY BAY, INC. All designs and other information in the drawings are for use on the specified project and shall not be used otherwise without the written permission of AURUM CONSULTING ENGINEERS MONTEREY BAY, INC.

These drawings are instruments of service and are the property of Andrew Goodwin Designs, Inc. The information represented on these drawings are exclusively for the project indicated and shall not be transferred or otherwise reproduced without express written permission of Andrew Goodwin. Copyright 2023

REVISIONS

REV # | REV DATE | REV DESCRIPTION

SEAL

NOT FOR CONSTRUCTION

PROJECT

TRANQUILLITY HIGH SCHOOL
AQUATIC CENTER MODERNIZATION
6052 Juanche Ave,
Tranquillity, CA 93668

CLIENT

GOLDEN PLAINS UNIFIED SCHOOL DISTRICT

SHEET TITLE
ELECTRICAL SINGLE LINE DIAGRAM

PHASE DESCRIPTION
100% CD FCHD APPROVAL
SWIMMING POOL

DATE: 8/26/2025

TECHNICIAN: RT

PROJECT MANAGER: TP

JOB NUMBER: 791

SHEET NUMBER
E101-1

PLOT DATE: 3/21/2025 3:26:20 PM

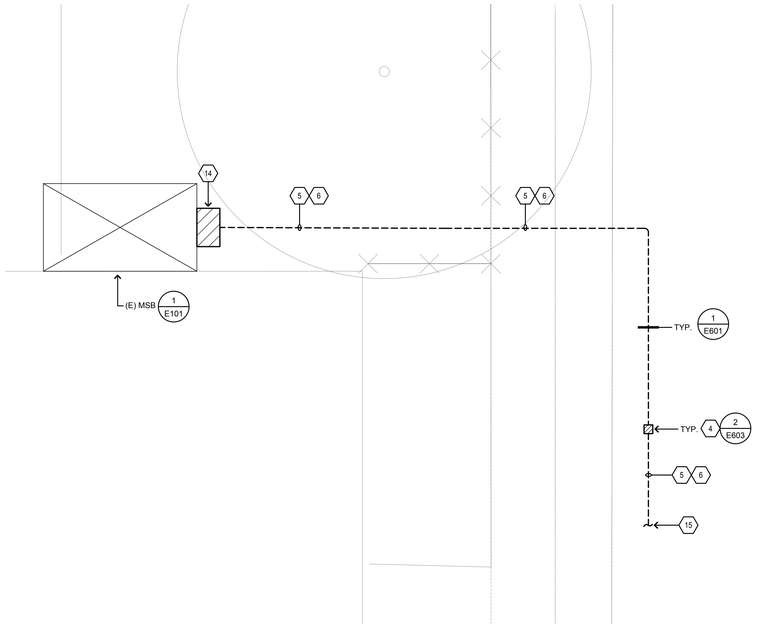

2 ENLARGED ELECTRICAL PLAN

SCALE: 1/4"=1'-0"

4' 0' 1' 2' 3' 4'

NORTH

SHEET NOTES

1. SEE E202 FOR CONTINUATION.
2. PROVIDE & INSTALL:
   -(1) 2 1/2"C. FOR TELE/DATA
   -(2) 2 1/2"C.O. (SPARE)
3. PROVIDE AND INSTALL CHRISTY #N30 PULLBOX WITH LID LABELED "SYSTEMS".
4. PROVIDE AND INSTALL CHRISTY #N30 PULLBOX WITH LID LABELED "ELECTRICAL".
5. PROVIDE AND INSTALL FEEDER CONNECTION FROM MSB TO DISTRIBUTION PANEL "DH".
6. SEE 1/E101 FOR FEEDER SIZES & REQUIREMENTS.
7. INSTALL 18" SQ. x 6" DEEP NEMA 3R PULLCAN UP HIGH ON BUILDING WALL.
8. PROVIDE & INSTALL:
   -(1) 2"C., FOR FIRE ALARM CABLE
   -(1) 2"C.O. (SPARE)
9. PROVIDE & INSTALL CHRISTY#N30 PULLBOX LID LABELED "FIRE ALARM"
10. CONTRACTOR SHALL TRACE EXISTING MEDIUM VOLTAGE CABLE (IN EXISTING BORE/TRENCH) FOR PV SYSTEM INTERCONNECTION ROUTED THROUGH NEW SITE WORK; INTERCEPT IN NEW 3'x 5' (DEPTH SHALL BE ASSUMED MINIMUM 6" FOR BOX.
11. ASSUME EXISTING MEDIUM VOLTAGE CABLES ARE #1 COPPER, 21KV RATED, 133% INSULATION 5" CONDUIT. CONTRACTOR SHALL BE RESPONSIBLE FOR FIELD VERIFICATION. WATERPROOF SPLICE AND EXTEND NEW MATCHING CONDUIT/CABLES BETWEEN TWO NEW PULL BOXES. CONTRACTOR SHALL TEST CONNECTIONS BETWEEN BOTH TRANSFORMERS AND ENSURE FULL FUNCTIONALITY. COORDINATE SHUT DOWN WITH UTILITY COMPANY AS NECESSARY FOR NEW WORK.
12. INSTALL NEW MATCHING 5" CONDUIT WITH SPLICED/EXTENDED 21KV CABLES BETWEEN NEW BOXES. ROUTE TO AVOID NEW POOL AREA WORK.
13. INSTALL 24" SQ. x 6" DEEP NEMA 3R PULLCAN UP HIGH ON BUILDING WALL.
14. PROVIDE AND INSTALL PULLCAN ON SIDE OF EXISTING "MSB". 30" SQUARE X 18" DEEP, NEMA 3R. SEAL ALL PENETRATIONS, WATERPROOF.
15. SEE 1/E201 FOR CONTINUATION.
16. SEE 2/E201 FOR CONTINUATION.
17. CONTRACTOR SHALL CUT AND REPAIR CONCRETE/SIDEWALK TO CITY/DISTRICT REQUIREMENTS. CONTRACTOR SHALL VERIFY AND ACCOUNT FOR ALL REQUIREMENTS.

NOTES:

A. CONTRACTOR SHALL LOCATE ALL (E) UNDERGROUND UTILITIES PRIOR TO TRENCHING AND TAKE CAUTION TO AVOID DAMAGE DURING TRENCHING. HAND TRENCH IF NECESSARY. CONTRACTOR SHALL MAKE ALL REPAIRS TO DAMAGED UTILITIES AT NO CHARGE TO OWNER.

B. ALL WIRING FOR SITE LIGHTING SHALL BE #10 AWG MINIMUM, U.O.N.

C. SEAL ALL EXTERIOR/INTERIOR BUILDING PENETRATIONS, CUT AND PATCH WALLS/CEILINGS FOR CONDUIT ROUTING AS NECESSARY. PAINT/FINISH EXPOSED CONDUITS/BOXES TO MATCH BUILDING FINISH. COORDINATE WITH DISTRICT & ARCHITECT FOR EXACT REQUIREMENTS.

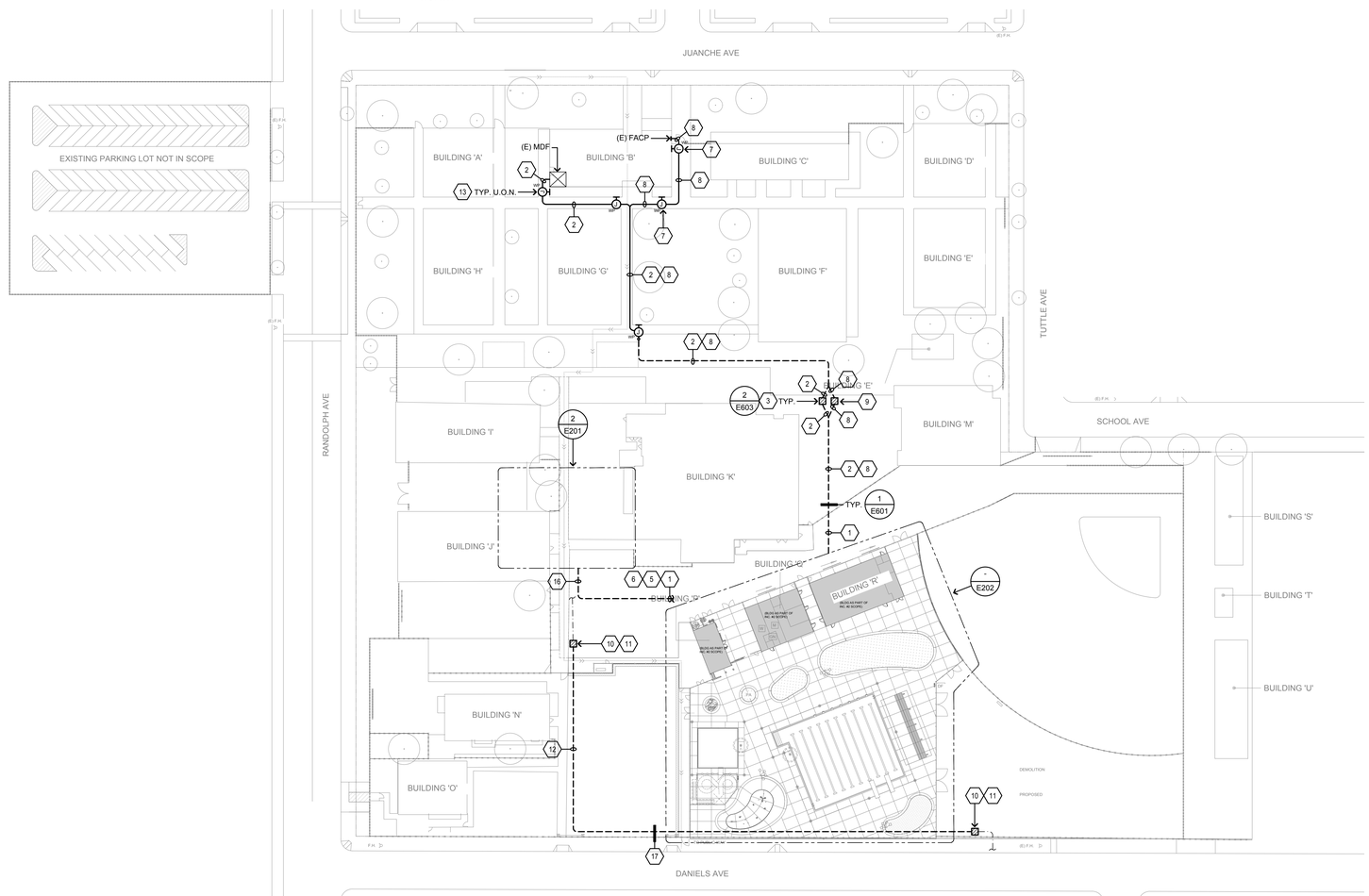

1 OVERALL SITE PLAN

SCALE: 1"=50'-0"

50' 0' 25' 50'

NORTH

COUNTY OF FRESNO ENVIRONMENTAL HEALTH DIVISION
1221 Fulton Street – 3rd Floor (559) 600-3357
APPROVED
WITH NOTED CORRECTIONS AND
SUBJECT TO FIELD INSPECTIONS
BY: DATE: 8/26/25
APPROVAL OF THIS PLAN DOES NOT CONSTITUTE PERMISSION TO VIOLATE ANY APPLICABLE CITY OR COUNTY ORDINANCE OR STATE LAW AND SHALL NOT PREVENT THIS DEPARTMENT FROM REQUIRING CORRECTION OF ERRORS OR OMISSIONS IN PLANS, SPECIFICATIONS OR CONSTRUCTION.

AGD
ARCHITECTURE | DESIGN

ANDREW GOODWIN DESIGNS
1238 MONTEREY STREET
SAN LUIS OBISPO, CA 93422
t: (805) 439-1611
www.andrewgoodwin.us
architect: andrew goodwin, aia
andrew@andrewgoodwin.us

AURUM CONSULTING ENGINEERS
MONTEREY BAY, INC.
Project No. 24-160.00
404 W. Franklin St. • Suite 100 • Monterey, CA 93940
T.831.646.3330 • F.831.646.3336 • www.acemb.com

These drawings are instruments of service and are the property of AURUM CONSULTING ENGINEERS MONTEREY BAY, INC. All designs and other information in the drawings are for use on the specified project and shall not be used otherwise without written permission of AURUM CONSULTING ENGINEERS MONTEREY BAY, INC.

These drawings are instruments of service and are the property of Andrew Goodwin Designs, Inc. The information represented on these drawings are exclusively for the project indicated and shall not be transferred or otherwise reproduced without express written permission of Andrew Goodwin. Copyright 2023

REVISIONS

REV #	REV DATE	REV DESCRIPTION

SEAL

REGISTERED PROFESSIONAL ENGINEER
ANDREW GOODWIN
C-10 LICENSE
ELECTRICAL
STATE OF CALIFORNIA

NOT FOR CONSTRUCTION

PROJECT

TRANQUILLITY HIGH SCHOOL
AQUATIC CENTER MODERNIZATION
6052 Juanche Ave,
Tranquillity, CA 93668

CLIENT

GOLDEN PLAINS UNIFIED SCHOOL DISTRICT

SHEET TITLE
OVERALL SITE PLAN

PHASE DESCRIPTION
100% CD FCHD APPROVAL
SWIMMING POOL

DATE: 8/26/2025
TECHNICIAN: RT
PROJECT MANAGER: TP
JOB NUMBER: 791

SHEET NUMBER
E201-1

PLOT DATE: 3/21/2025 3:26:20 PM

NOTES:

A. CONTRACTOR SHALL LOCATE ALL (E) UNDERGROUND UTILITIES PRIOR TO TRENCHING AND TAKE CAUTION TO AVOID DAMAGE DURING TRENCHING. HAND TRENCH IF NECESSARY. CONTRACTOR SHALL MAKE ALL REPAIRS TO DAMAGED UTILITIES AT NO CHARGE TO OWNER.

B. U.O.N., ALL WIRING FOR PATHWAY POLE LIGHTING SHALL BE 1"C., #10 AWG MINIMUM.

C. SEAL ALL EXTERIOR/INTERIOR BUILDING PENETRATIONS, CUT AND PATCH WALLS/CEILINGS FOR CONDUIT ROUTING AS NECESSARY. PAINT/FINISH EXPOSED CONDUITS/BOXES TO MATCH BUILDING FINISH. COORDINATE WITH DISTRICT & ARCHITECT FOR EXACT REQUIREMENTS.

⬡ SHEET NOTES

1. SEE 1/E101 FOR FEEDER SIZES & REQUIREMENTS.
2. PROVIDE AND INSTALL FEEDER CONNECTION FROM MSB TO DISTRIBUTION PANEL "DH".
3. PROVIDE AND INSTALL CHRISTY #N30 PULLBOX WITH LID LABELED "SYSTEMS".
4. PROVIDE AND INSTALL CHRISTY #N30 PULLBOX WITH LID LABELED "ELECTRICAL".
5. PROVIDE AND INSTALL CHRISTY #N30 PULLBOX WITH LID LABELED "LIGHTING".
6. SEE E201 FOR CONTINUATION.
7. SEE E401 FOR CONTINUATION.
8. PROVIDE AND INSTALL CHRISTY #N40 PULLBOX WITH LID LABELED "ELECTRICAL"
9. PROVIDE & INSTALL:
   -(1) 2 ½"C. FOR TELE/DATA CABLES
   -(2) 2 ½"C.O. (SPARE)
10. PROVIDE AND INSTALL 2"C., FOR FIRE ALARM CABLES.
11. INSTALL 20 AMP, 120V, 1-POLE FUSED DISCONNECT FOR SCOREBOARD.
12. LOCATE GROUND ROD BOX; SEE DETAIL 5/E101. INSTALL 3/4" CONDUIT WITH #4 AWG GROUND WIRE FROM GROUND ROD BOX UP TO DISCONNECT/STEEL FRAME STRUCTURE OF SCOREBOARD MFR. INSTALLATION INSTRUCTIONS FOR INSTALLATION AND GROUNDING REQUIREMENTS.
13. PROVIDE & INSTALL:
   -(1) 2"C., FOR FIRE ALARM CABLE
   -(1) 2"C.O. (SPARE)
14. PROVIDE AND INSTALL CHRISTY #N40 PULLBOX WITH LID LABELED "SYSTEMS".
15. SCOREBOARD, 20A, 120V.
16. INSTALL 1"C., W/ 2 #8 & 1 #8 GND.
17. PROVIDE AND INSTALL 2 ½"C., FOR TELE/DATA.
18. PROVIDE AND INSTALL FEEDER TO PANEL "MCP".
19. CONNECT VIA EMERGENCY LIGHTING INVERTER LOCATED BUILDING "P".
20. PROVIDE AND INSTALL
   -(1) 2 ½"C.O. (SPARE)
   -(1) 2" C.O. (SPARE)
21. PROVIDE AND INSTALL (3) ON/OFF SWITCH FOR EACH SPORTS POLE LIGHT.
22. CONNECT TO (3) 20A, 277V, 1-POLE BREAKER AT BUILDING P 277/480V PANEL.
23. PROVIDE AND INSTALL 6 #8 AND 1 #8 GND FOR POOL SPORTS LIGHTS.
24. PROVIDE AND INSTALL 2 #8 AND 1 #8 GND FOR POOL SPORTS LIGHTS.
25. PROVIDE AND INSTALL IN-GRADE CHRISTY #N30 PULLBOX, CHECKERED STEEL LID LABELED "ELECTRICAL" WITH (1) Q-SET-1 & (1) Q-VAULT-5 DIRECT BURIAL TRANSFORMER HOUSING. CONTRACTOR SHALL ADJUST TAPS OF SECONDARY OUTPUT TO ACCOUNT FOR VOLTAGE DROP. CONNECT FROM MULTIPLE SECONDARY TAPS OUT TO FIXTURES..
26. PROVIDE AND INSTALL 4" C.O.
27. PROVIDE AND INSTALL (2) 20A, 277V, 1-POLE BREAKER AT BUILDING P 277/480V PANEL.
28. CONNECT VIA LIGHTING CONTROL PANEL.
29. PROVIDE AND INSTALL 2"C., FOR FIRE ALARM CABLES.
30. PROVIDE AND INSTALL 1"C.O.
31. CIRCUIT ALL CONCRETE BENCH STRIP LIGHTING WITH #8 AWG FROM SECONDARY OF TRANSFORMER (24VDC).
32. PROVIDE AND INSTALL 20A, 1-POLE BREAKER AT BUILDING P 277/480V PANEL.
33. HOME RUN TO PULLBOX W/ LID LABELED "LIGHTING" OUTSIDE OF BUILDING "R".
34. PROVIDE AND INSTALL 16" SQ x 4" DEEP NEMA 3R PULLCAN.
35. COORDINATE JUNCTION BOXES AT SEAT WALLS. SHALL BE FLUSH CAST IRON.
36. PROVIDE AND INSTALL 2 ½"C.O. (SPARE)

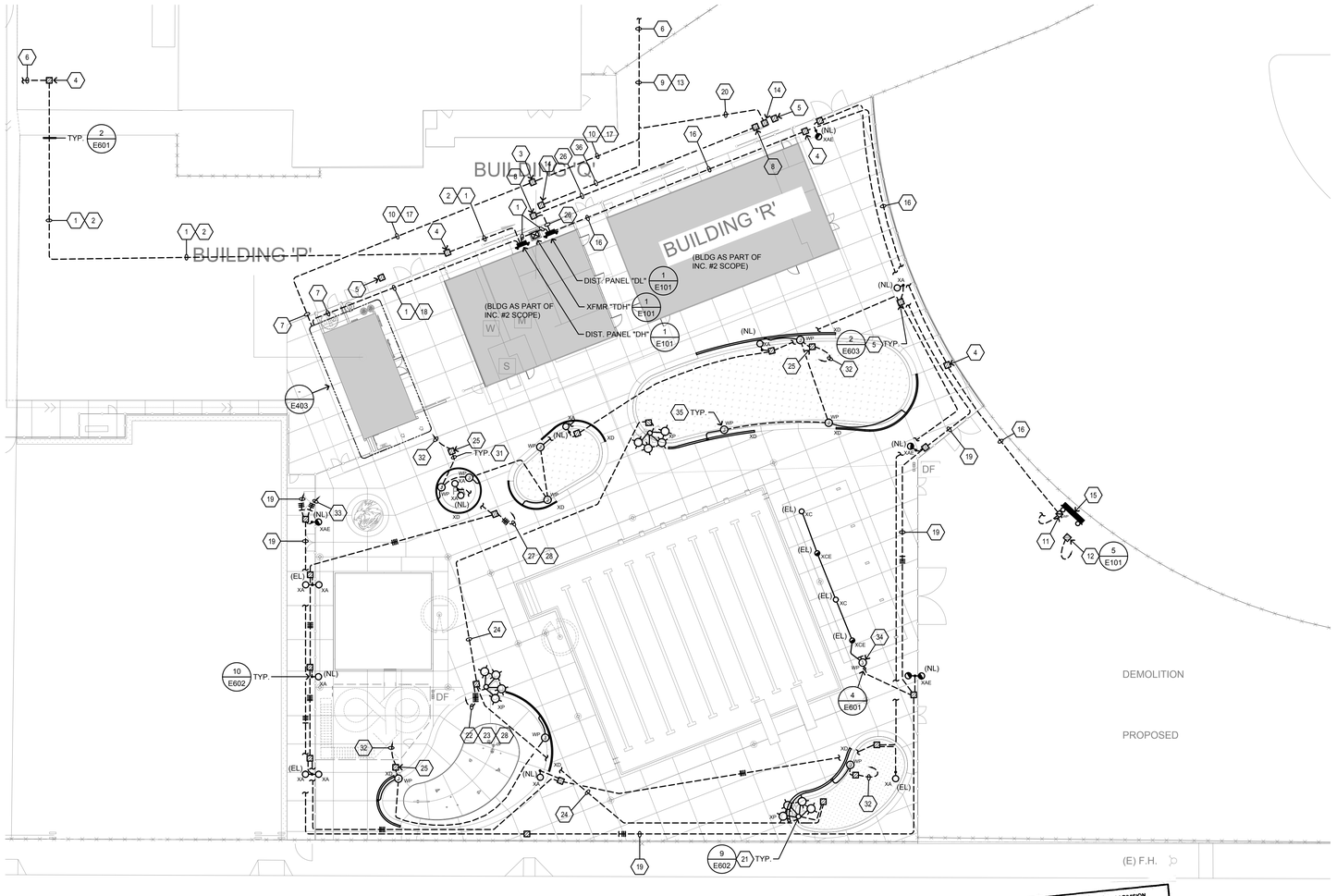

COUNTY OF FRESNO ENVIRONMENTAL HEALTH DIVISION
1221 Fulton Street – 3rd Floor (559) 600-3357
APPROVED WITH NOTED CORRECTIONS AND SUBJECT TO FIELD INSPECTIONS
BY: DATE: 8/26/25
APPROVAL OF THIS PLAN DOES NOT CONSTITUTE PERMISSION TO VIOLATE ANY APPLICABLE CITY OR COUNTY ORDINANCE, OR STATE LAWS AND SHALL NOT PRECLUDE THIS DEPARTMENT FROM REQUIRING CORRECTION OF ERRORS OR OMISSIONS IN PLANS, SPECIFICATIONS OR CONSTRUCTION

SCALE: 1"=20'-0"

NORTH

AGD ARCHITECTURE | DESIGN

ANDREW GOODWIN DESIGNS
1238 MONTEREY STREET
SAN LUIS OBISPO, CA 93422
t: (805) 439-1611
www.andrewgoodwin.us
architect: andrew goodwin, aia
andrew@andrewgoodwin.us

AURUM CONSULTING ENGINEERS MONTEREY BAY, INC.
Project No. 24-160.00
404 W. Franklin St. • Suite 100 • Monterey, CA 93940
T.831.646.3330 • F.831.646.3336 • www.acemb.com

These drawings are instruments of service and are the property of AURUM CONSULTING ENGINEERS MONTEREY BAY, INC. All designs and other information in the drawings are for use on the specified project and shall not be used otherwise without written permission of AURUM CONSULTING ENGINEERS MONTEREY BAY, INC.

These drawings are instruments of service and are the property of Andrew Goodwin Designs, Inc. The information represented on these drawings are exclusively for the project indicated and shall not be transferred or otherwise reproduced without express written permission of Andrew Goodwin. Copyright 2023

REVISIONS

REV #	REV DATE	REV DESCRIPTION

SEAL

NOT FOR CONSTRUCTION

PROJECT

TRANQUILLITY HIGH SCHOOL
AQUATIC CENTER MODERNIZATION
6052 Juanche Ave,
Tranquillity, CA 93668

CLIENT

GOLDEN PLAINS UNIFIED SCHOOL DISTRICT

SHEET TITLE
ENLARGED SITE PLAN

PHASE DESCRIPTION
100% CD FCHD APPROVAL SWIMMING POOL

DATE: 8/26/2025
TECHNICIAN: RT
PROJECT MANAGER: TP
JOB NUMBER: 791

SHEET NUMBER
E202-1

PLOT DATE: 3/21/2025 3:26:20 PM

SHEET NOTES

1. PROVIDE AND INSTALL IP-SDM ATLAS PA SPEAKER AND CLOCK WITH WALL MOUNTED BACK BOX TO HOUSE BOTH DEVICES; W/ ½"C., & CAT 6 CABLE TO IDF. PROVIDE AND INSTALL NECESSARY MOUNTING HARDWARE.
2. PROVIDE & INSTALL IN-USE WEATHERPROOF COVER, TAYMAC OR EQUAL.
3. PROVIDE & INSTALL PATCH PANEL FOR PA/SPEAKER SYSTEM. EXTEND AND CONNECT NEARBY STUBBED PA/CLOCK CONDUIT WITH PA/CLOCK CABLES TO PATCH PANEL.
4. VERIFY EXACT LOCATION WITH ARCHITECT PRIOR TO ROUGH-IN.
5. NOTE NOT USED.
6. INSTALL 6" SQ. x 4" DEEP NEMA 3R PULLCAN UP HIGH ON BUILDING WALL.
7. ALL EXPOSED ELECTRICAL CONDUIT, BOXES, AND COVER PLATES IN CHLORINE & ACID ROOMS.
8. EQUIPMENT & EXACT LOCATIONS TO BE VERIFIED.
9. LOCATE/MOUNT DISCONNECT NEXT TO VFD. SEE POOL DRAWINGS FOR UNISTRUT MOUNTING ON POSTS FOR THIS EQUIPMENT. ON FACE OF CIRCULATION PUMP DISCONNECT, PROVIDE & INSTALL LAMICOID NAME PLATE READING: "WHERE DISCONNECT IS SHUT-OFF ALL VFD STATUS WILL CAUSE SYSTEM RESET. SEE VFD INSTRUCTIONS FOR SHUT-OFF TO AVOID COMPLETE RESET".
10. SEE SINGLE LINE DIAGRAM 1/E101 FOR FEEDER SIZE AND REQUIREMENTS.
11. PROVIDED AS PART OF BUILDING P. SEE POOL EQUIPMENT DRAWINGS.
12. LOCATE FOR PA SPEAKER, PROVIDE & INSTALL IP-HPV ATLAS SPEAKER W/ ½"C., & CAT 6 CABLE TO IDF.
13. CONNECT TO A 20A, 120V, 1-POLE BREAKER IN PANEL "LSP".
14. SUMP PUMP, 1/3 HP, 1Ø.
15. CIRCULATION PUMP, 20 HP, 3Ø, 460V.
16. CIRCULATION PUMP, 5 HP, 3Ø, 208V.
17. WATERSLIDE PUMP, 15 HP, 3Ø, 460V.
18. SURGE TANK CIRCULATION PUMP, 5 HP, 3Ø, 208V.
19. FEATURE PUMP, 5 HP, 460V.
20. VARIABLE FREQUENCY DRIVE, 20 HP, 460V, W/ 36" X 30" X 10" CABINET.
21. VARIABLE FREQUENCY DRIVE, 5 HP, 460V.
22. EXHAUST FAN, 1/25 HP, 120V, ON ROOF.
23. SEE SHEET E202 FOR CONTINUATION.
24. PROVIDE AND INSTALL FEEDER TO PANEL "MCP".
25. CIRCUIT VIA LIGHTING CONTROL PANEL.
26. CIRCUIT VIA ½" , 2 #12 & 1 #12 GND TO PANEL "LSP" . AT PANEL PROVIDE AND INSTALL 20 AMP, 1-POLE BREAKER WITH LOCK-ON DEVICE WITH RED MARKINGS LABELED "FIRE ALARM/ECS".
27. PROVIDE AND INSTALL:
    -(1) 2"C. FOR FIRE ALARM CABLES
    -(1) 2 ½"C. FOR TELE/DATA CABLES.
28. HOMERUN TO "IDF" LOCATED IN POOL EQUIPMENT BUILDING "P".
29. HOMERUN TO INTELLIGENT NETWORK TRANSPONDER "INX" LOCATED IN POOL EQUIPMENT BUILDING "P".
30. PROVIDE AND INSTALL 2"C. FOR FIRE ALARM CABLES.
31. PROVIDE AND INSTALL 2 ½"C. FOR TELE/DATA CABLES.
32. ¾"C., W/ #6 GND TO DIST. PANEL GND BUS.
33. CONTRACTOR SHALL INSTALL VERKADA CCTV CAMERA W/ ½"C., & CAT 6A CABLE TO IDF. CONTRACTOR SHALL COORDINATE FOR EXACT MAKE/MODEL W/ I.T. DEPARTMENT. (DOME SERIES).
34. WATER HEATER, 75 WATTS, 120V.
35. CONNECT TO (2) 20A, 277V, 1-POLE BREAKER IN PANEL "MSP"
36. CONTRACTOR SHALL CONNECT EMERGENCY BATTERY BACK-UP TO LIGHTING CIRCUIT VIA UNSWITCHED HOT IN SPACE AND ALLOW FOR NORMAL SWITCHING DURING NORMAL OPERATION.
37. PROVIDE AND INSTALL DEDICATED DUPLEX RECEPTACLE FOR IDF. CIRCUIT VIA ½" C. 2 #12 & 1 #12GND TO PANEL IN SAME PORTABLE CLASSROOM; AT PANEL PROVIDE AND INSTALL 20A, 1-POLE BREAKER AND ALL NECESSARY MOUNTING HARDWARE.
38. CONNECT TO A 15A, 120V, 1-POLE BREAKER IN PANEL "LSP"
39. ELECTRONIC TRAP PRIMER, 9.2W, 120V.
40. VARIABLE FREQUENCY DRIVE, 15 HP, 460V, W/ NEMA 4X CABINET.

BRANCH CIRCUIT CONDUCTOR SIZING TABLE

CIRCUIT AMPACITY/VOLTAGE	CIRCUIT LENGTH	REQUIREMENT
20/120	56'-90'	½" C., 2 #10 & 1 #10 GND.
20/120	91'-140'	½" C., 2 #8 & 1 #8 GND.
20/277	131'-205'	½" C., 2 #10 & 1 #10 GND.
20/277	206'-330'	½" C., 2 #8 & 1 #8 GND.

NOTE:

A. CONTRACTOR SHALL SIZE BRANCH CIRCUIT CONDUCTORS PER THE TABLE ABOVE AS DETERMINED BY THE CIRCUIT CONDUCTOR LENGTH, U.O.N. CONTRACTOR SHALL SPLICE TO #12 AWG WITHIN TERMINATION BOX FOR DEVICE CONNECTION IF NECESSARY.

B. WHERE THE UNGROUNDED CONDUCTORS IS INCREASED IN SIZE, INCLUDING FOR VOLTAGE DROP, THE GROUNDED CONDUCTOR SHALL BE INCREASED IN SIZE PROPORTIONATELY PER CEC 250.122(B)

GENERAL NOTES:

A. SEAL ALL EXTERIOR/INTERIOR BUILDING PENETRATIONS, CUT AND PATCH WALLS/CEILINGS FOR CONDUIT ROUTING AS NECESSARY. PAINT/FINISH EXPOSED CONDUITS/BOXES TO MATCH BUILDING FINISH. COORDINATE WITH DISTRICT & ARCHITECT FOR EXACT REQUIREMENTS.

B. CONTRACTOR SHALL PROVIDE & INSTALL TAMPER-RESISTANT TYPE RECEPTACLES FOR ALL GENERAL 20 AMP, 120V RECEPTACLES. ONLY RECEPTACLES TO BE MOUNTED/LOCATED AT +5'-6" A.F.F. AND FOR FIXED EQUIPMENT (WITH CORD & PLUG CONNECTION) ARE NOT REQUIRED TO BE OF TAMPER-RESISTANT TYPE.

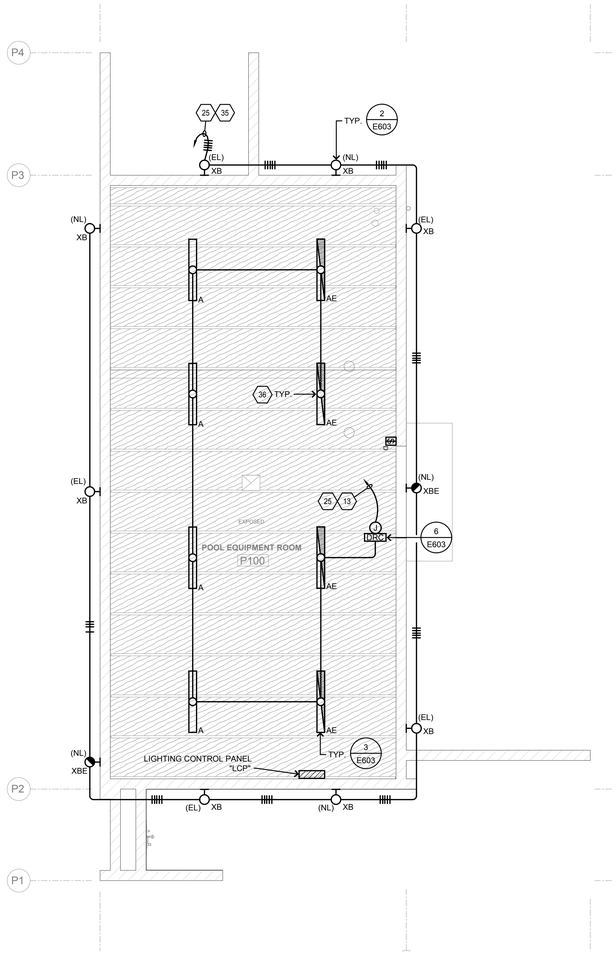

2 BUILDING P - LIGHTING PLAN

SCALE: 1/4"=1'-0"

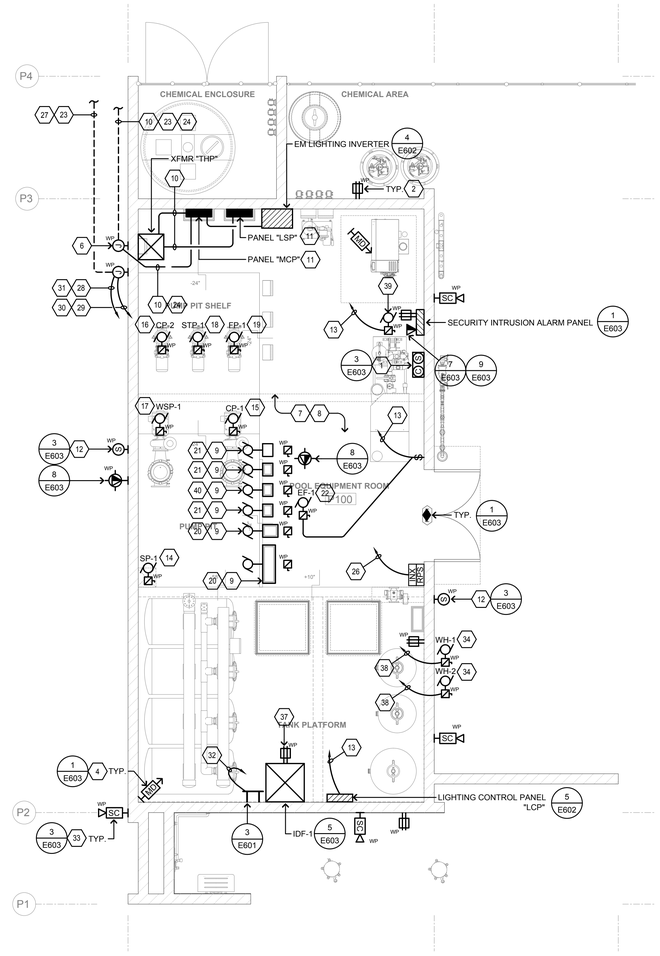

1 BUILDING P - POWER & SYSTEMS PLAN

SCALE: 1/4"=1'-0"

NORTH

COUNTY OF FRESNO ENVIRONMENTAL HEALTH DIVISION
1221 Fulton Street – 3rd Floor (559) 600-3357
APPROVED WITH NOTED CORRECTIONS AND SUBJECT TO FIELD INSPECTIONS
BY: DATE: 8/26/25
APPROVAL BY THE DEPARTMENT DOES NOT CONSTITUTE PERMISSION TO VIOLATE ANY APPLICABLE CITY OR COUNTY ORDINANCE, OR STATE LAW, AND SHALL NOT PREVENT THE DEPARTMENT FROM REQUIRING CORRECTION OF ERRORS OR OMISSIONS IN PLANS, SPECIFICATIONS OR CONSTRUCTION.

AGD ARCHITECTURE | DESIGN

ANDREW GOODWIN DESIGNS
1238 MONTEREY STREET
SAN LUIS OBISPO, CA 93422
t: (805) 439-1611
www.andrewgoodwin.us
architect: andrew goodwin, aia
andrew@andrewgoodwin.us

AURUM CONSULTING ENGINEERS MONTEREY BAY, INC.
Project No. 24-160.00
404 W. Franklin St. • Suite 100 • Monterey, CA 93940
T.831.646.3330 • F.831.646.3336 • www.acemb.com

These drawings are instruments of service and are the property of AURUM CONSULTING ENGINEERS MONTEREY BAY, INC. All designs and other information in the drawings are for use on the specified project and shall not be used otherwise without the written permission of AURUM CONSULTING ENGINEERS MONTEREY BAY, INC.

These drawings are instruments of service and are the property of Andrew Goodwin Designs, Inc. The information represented on these drawings are exclusively for the project indicated and shall not be transferred or otherwise reproduced without express written permission of Andrew Goodwin. Copyright 2023

REVISIONS

REV # | REV DATE | REV DESCRIPTION

SEAL

REGISTERED PROFESSIONAL ENGINEER — NOT FOR CONSTRUCTION — ELECTRICAL — STATE OF CALIFORNIA

PROJECT

TRANQUILLITY HIGH SCHOOL
AQUATIC CENTER MODERNIZATION
6052 Juanche Ave,
Tranquillity, CA 93668

CLIENT

GOLDEN PLAINS UNIFIED SCHOOL DISTRICT

SHEET TITLE
BUILDING P - POWER & LIGHTING PLAN

PHASE DESCRIPTION
100% CD FCHD APPROVAL SWIMMING POOL

DATE: 8/26/2025

TECHNICIAN: RT

PROJECT MANAGER: TP

JOB NUMBER: 791

SHEET NUMBER
E401-1

PLOT DATE: 3/21/2025 3:26:20 PM

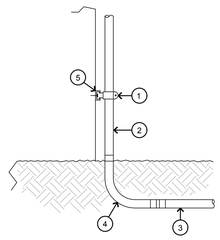

DETAIL NOTES:

1. UNISTRUT BRACKET.
2. GALVANIZED RIGID STEEL CONDUIT.
3. SCHEDULE 40 PVC.
4. WRAPPED GALVANIZED RIGID STEEL ELBOW AND UNDERGROUND RISER.
5. UNISTRUT CHANNEL.

GENERAL NOTES:

A. FOR WOOD STUD WALL:
USE ½" LAG BOLT WITH MIN. ¾" EMBEDMENT INTO STUDS.
(ONE AT EACH END OF BRACKET)

B. FOR CONCRETE WALL:
USE ¼" WEDGE ANCHOR WITH MIN. 2 ½" EMBEDMENT INTO CONCRETE WALL. (ONE AT EACH END OF BRACKET)

4 UNDERGROUND CONDUIT RISER DETAIL

NO SCALE

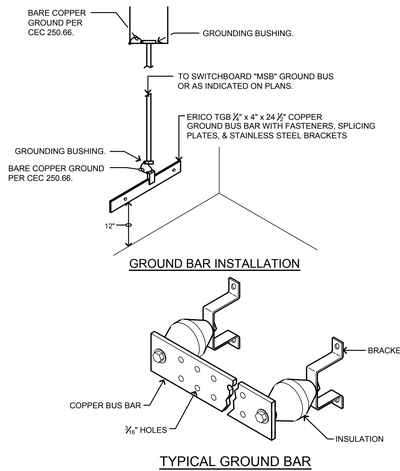

3 GROUND BAR DETAIL

NO SCALE

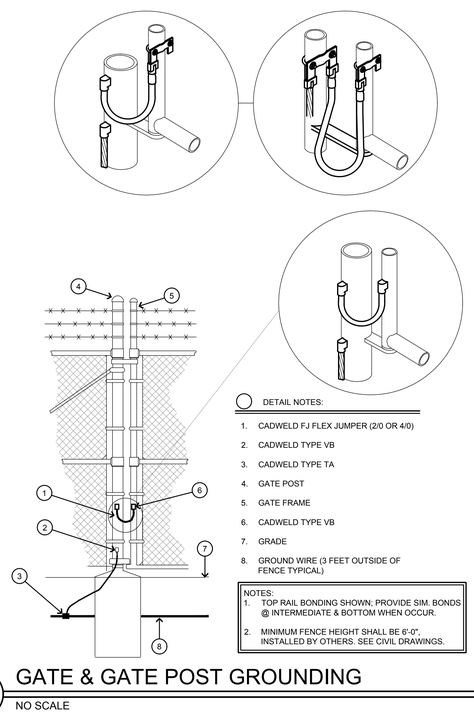

DETAIL NOTES:

1. CADWELD FJ FLEX JUMPER (2/0 OR 4/0)
2. CADWELD TYPE VB
3. CADWELD TYPE TA
4. GATE POST
5. GATE FRAME
6. CADWELD TYPE VB
7. GRADE
8. GROUND WIRE (3 FEET OUTSIDE OF FENCE TYPICAL)

NOTES:

1. TOP RAIL BONDING SHOWN; PROVIDE SIM. BONDS @ INTERMEDIATE & BOTTOM WHEN OCCUR.
2. MINIMUM FENCE HEIGHT SHALL BE 6'-0", INSTALLED BY OTHERS. SEE CIVIL DRAWINGS.

2 GATE & GATE POST GROUNDING

NO SCALE

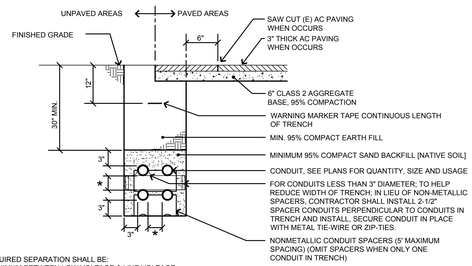

★ = REQUIRED SEPARATION SHALL BE:
12" MINIMUM BETWEEN LOW VOLTAGE & LINE VOLTAGE CONDUITS LIKE SYSTEMS REQUIRE 3" SEPARATION

NOTES FOR CLEARANCES:

1. THE MINIMUM RECOMMENDED SEPARATIONS BETWEEN TELECOMMUNICATIONS CONDUIT SYSTEMS AND OUTSIDE SURFACES OF FOREIGN STRUCTURES VARY IN ACCORDANCE WITH REGIONAL STANDARDS, CODES, AND REGULATIONS:
   a. 6" MIN. WHEN CROSSING PIPES (E.G., GAS, WATER, OIL)
   b. 12" MIN. WHEN PARALLEL TO PIPES (E.G., GAS, WATER, OIL)
   c. 3" MIN. CONCRETE FOREIGN CONDUIT (POWER OR OTHER)
   d. 4" MIN. MASONRY (POWER OR OTHER)
   e. 12" MIN. OF WELL-TAMPED EARTH (POWER OR OTHER)
2. THE TOP OF CONDUIT SHOULD BE LOCATED AT A SUFFICIENT DEPTH (NORMALLY 24"-30") BELOW SURFACE GRADE SO BOTH LIVE OR DYNAMIC AND DEAD (STATIC) OR EARTH LOADS CAN BE SUSTAINED BY THE CONDUIT STRUCTURE.

NOTES:

1. SAW CUT, TRENCH & BACKFILL FOR NEW CONDUITS. PATCH WALKWAY TO MATCH (E) SURROUNDING SURFACES. CARE SHALL BE TAKEN TO PROTECT EXISTING TREES. RESEED OR RESOD (E) DISTURBED PLANTED AREAS TO ARCHITECT'S SATISFACTION.
2. BASE MATERIAL TO BE REPLACED TO THE DEPTH OF EXISTING BASE AND COMPACTED TO A MIN. 95% RELATIVE COMPACTION. A.C. MAY BE SUBSTITUTED FOR BASE MATERIAL. WHEN USED AS BACKFILL, CLASS 100-E-100 P.C.C. MAY BE SUBSTITUTED FOR BASE MATERIAL.

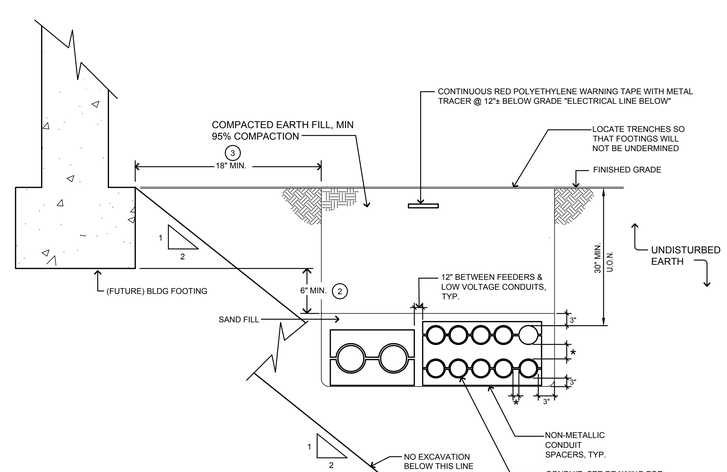

NOTES:

1. ALL DUCT BANKS SHALL BE INSTALLED PRIOR TO POURING OF FOOTINGS. COORDINATE WITH STRUCTURAL & OTHER TRADES.
2. WHERE DUCT BANKS PASS BELOW FOOTING PROVIDE 6" MIN. VERTICAL CLEARANCE U.O.N.
3. WHERE DUCT BANKS PARALLEL FOOTING PROVIDE 18" MIN. LATERAL CLEARANCE U.O.N.

COUNTY OF FRESNO ENVIRONMENTAL HEALTH DIVISION
1221 Fulton Street - 3rd Floor (559) 600-3357
APPROVED WITH NOTED CORRECTIONS AND SUBJECT TO FIELD INSPECTIONS
BY: DATE: 8/26/25
APPROVAL OF THIS PLAN DOES NOT CONSTITUTE PERMISSION TO VIOLATE ANY APPLICABLE CITY OR COUNTY ORDINANCE, OR STATE LAW, AND SHALL NOT PREVENT THIS DEPARTMENT FROM REQUIRING CORRECTION OF ERRORS OR OMISSIONS IN PLANS, SPECIFICATIONS OR CONSTRUCTION.

★ = REQUIRED SEPARATION SHALL BE:
12" MINIMUM BETWEEN LOW VOLTAGE & LINE VOLTAGE CONDUITS LIKE SYSTEMS REQUIRE 3" SEPARATION

1 TYPICAL TRENCH SECTION

NO SCALE

AGD ARCHITECTURE | DESIGN

ANDREW GOODWIN DESIGNS
1238 MONTEREY STREET
SAN LUIS OBISPO, CA 93422
t: (805) 439-1611
www.andrewgoodwin.us

architect: andrew goodwin, aia
andrew@andrewgoodwin.us

AURUM CONSULTING ENGINEERS
MONTEREY BAY, INC.

Project No. 24-160.00

404 W. Franklin St. • Suite 100 • Monterey, CA 93940
T.831.646.3330 • F.831.646.3336 • www.acemb.com

These drawings are instruments of service and are the property of AURUM CONSULTING ENGINEERS MONTEREY BAY, INC. All designs and other information in the drawings are for use on the specified project and shall not be used otherwise without written permission of AURUM CONSULTING ENGINEERS MONTEREY BAY, INC.

These drawings are instruments of service and are the property of Andrew Goodwin Designs, Inc. The information represented on these drawings are exclusively for the project indicated and shall not be transferred or otherwise reproduced without express written permission of Andrew Goodwin. Copyright 2023

REVISIONS

REV #	REV DATE	REV DESCRIPTION

SEAL

REGISTERED PROFESSIONAL ENGINEER
ANDREW GOODWIN
No. E-18422
Exp. 12-31-2025
ELECTRICAL
STATE OF CALIFORNIA

NOT FOR CONSTRUCTION

PROJECT

TRANQUILLITY HIGH SCHOOL
AQUATIC CENTER MODERNIZATION
6052 Juanche Ave,
Tranquillity, CA 93668

CLIENT

GOLDEN PLAINS UNIFIED SCHOOL DISTRICT

SHEET TITLE
ELECTRICAL DETAILS

PHASE DESCRIPTION
100% CD FCHD APPROVAL
SWIMMING POOL

DATE: 8/26/2025

TECHNICIAN: RT

PROJECT MANAGER: TP

JOB NUMBER: 791

SHEET NUMBER
E601-1

PLOT DATE: 3/21/2025 3:26:20 PM

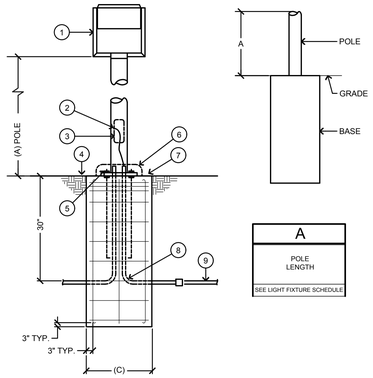

A
POLE LENGTH
SEE LIGHT FIXTURE SCHEDULE

DETAIL NOTES:

1. POLE MOUNTED FIXTURE.
2. GROUND BOND LUG IN POLE.
3. HANDHOLE WITH GASKET COVER.
4. TOP OF PAVING/SIDEWALK, FINISHED GRADE.
5. LEVEL NUTS.
6. ANCHOR BOLTS AND BASE COVER.
7. CONTRACTOR SHALL ENSURE THAT FINISH OF EXPOSED BASE IS SMOOTH WITH EVEN TEXTURE.
8. PVC ELBOW AND RISER.
9. BRANCH CIRCUIT PVC CONDUIT.

GENERAL NOTES:

A. FOR LIGHT POLE FOOTING DETAIL, SEE STRUCTURAL 32/S4.01-1.

B. CONTRACTOR SHALL INSTALL ALL ANCHORAGES AS NECESSARY.

7 POLE MOUNTED FIXTURE "XA" DETAIL

NO SCALE

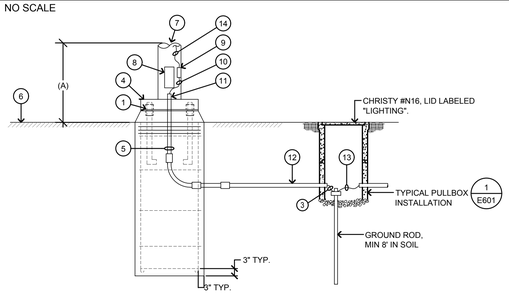

DETAIL NOTES:

1. LEVELING NUTS.
2. CONCRETE FOOTING PER STRUCTURAL.
3. #8 COPPER GROUND FROM POLE TO GROUND ROD.
4. BASE COVER.
5. RIGID STEEL ELBOW AND CONDUIT. WRAP WITH PVC TAPE OVERLAPPED 50%.
6. FINISHED GRADE.
7. LUMINAIRE POLE.
8. HAND HOLE.
9. GROUNDING LUG.
10. GROUND CONDUCTOR.
11. BUSHING, ON CONDUIT(S), CAP BEFORE POURING CONCRETE.
12. PVC SCH 40 FROM RIGID STEEL ELBOWS TO PULLBOX.
13. CONNECT BRANCH CIRCUIT EQUIPMENT GROUNDING CONDUCTOR TO GROUND ROD.
14. #10 EQUIPMENT GROUNDING CONDUCTOR FROM POLE GROUND LUG TO LUMINAIRE.

A
POLE LENGTH
SEE LIGHT FIXTURE SCHEDULE

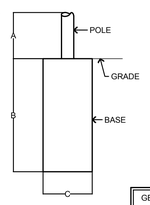

GENERAL NOTES:

A. FOR LIGHT POLE FOOTING DETAIL, SEE STRUCTURAL 32/S4.01-1

B. CONTRACTOR SHALL INSTALL ALL ANCHORAGES AS NECESSARY.

6 FLUSH POLE BASE "XP" DETAIL

NO SCALE

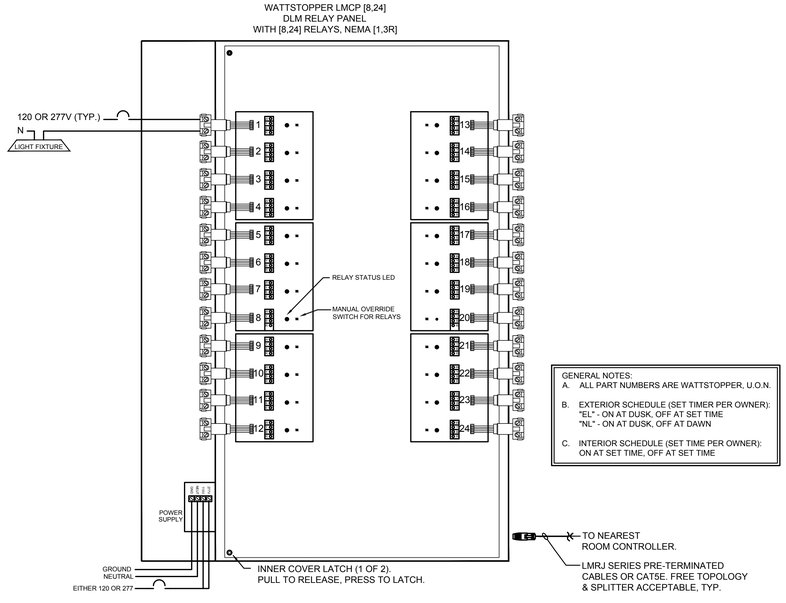

GENERAL NOTES:

A. ALL PART NUMBERS ARE WATTSTOPPER, U.O.N.

B. EXTERIOR SCHEDULE (SET TIMER PER OWNER):
"EL" - ON AT DUSK, OFF AT SET TIME
"NL" - ON AT DUSK, OFF AT DAWN

C. INTERIOR SCHEDULE (SET TIME PER OWNER):
ON AT SET TIME, OFF AT SET TIME

5 LIGHTING CONTROL PANEL DETAIL

NO SCALE

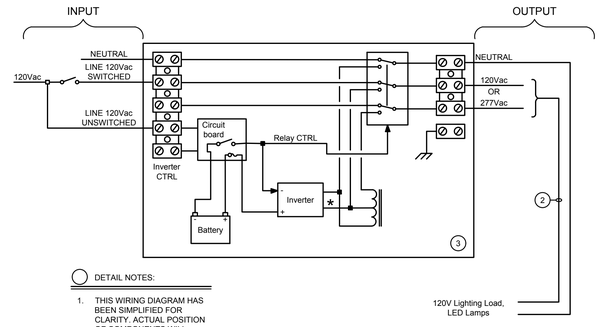

DETAIL NOTES:

1. THIS WIRING DIAGRAM HAS BEEN SIMPLIFIED FOR CLARITY. ACTUAL POSITION OF COMPONENTS WILL VARY.
2. CONNECT ONLY 120V LOADS.
3. EMERGI-LITE MINI-INVERTER SERIES MODEL EMIU-1000-4C.

4 EMERGENCY LIGHTING INVERTER

NO SCALE

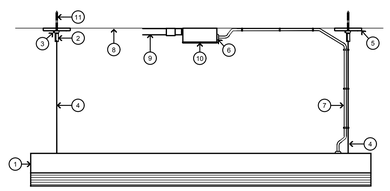

DETAIL NOTES:

1. LIGHT FIXTURE.
2. ¼" x 20 THREADED CABLE RETAINER BY MFGR.
3. SLIP RING AND SET SCREW BY MFGR.
4. 3/32" DIA. AIRCRAFT SAFETY CABLE BY MFGR., SECURE TO FIXT. SEE LIGHTING PLANS FOR QUANTITY AND LOCATION.
5. CANOPY.
6. STRAIN RELIEF.
7. SJT OR SO CORD.
8. WOOD BEAM.
9. SURFACE MOUNTED CONDUIT.
10. SURFACE MOUNTED J-BOX.
11. ¼" x 20 THREADED HANGER BOLT FOR WOOD CEILINGS. 1 ½" MINIMUM PENETRATION.

3 FIXTURE TYPE "A" MOUNTING DETAIL

NO SCALE

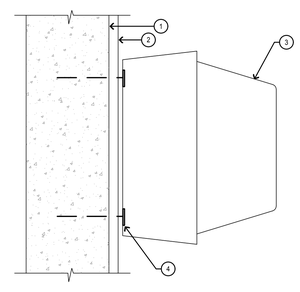

DETAIL NOTES:

1. BUILDING MASONRY (CMU) WALLS.
2. FOR BUILDING WALL CONSTRUCTION SEE ARCHITECTURAL DRAWINGS.
3. SURFACE MOUNTED FIXTURE. (15 LB. OR LESS)
4. ½" DIA. EXPANSION (WEDGE) ANCHOR PER S1.1, 3½" PENETRATION; TYP. (4) PER FIXTURE AT CORNERS

2 SURFACE MOUNTED FIXTURE DETAIL

NO SCALE

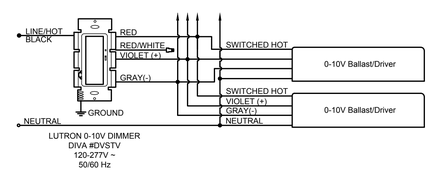

COUNTY OF FRESNO ENVIRONMENTAL HEALTH DIVISION
1221 Fulton Street – 3rd Floor (559) 600-3357
APPROVED WITH NOTED CORRECTIONS AND SUBJECT TO FIELD INSPECTIONS
BY: DATE: 8/26/25
APPROVAL OF THIS PLAN DOES NOT CONSTITUTE PERMISSION TO VIOLATE ANY APPLICABLE CITY OR COUNTY ORDINANCE, OR STATE LAW, AND SHALL NOT PRECLUDE THIS DEPARTMENT FROM REQUIRING CORRECTION OF ERRORS OR OMISSIONS IN PLANS, SPECIFICATIONS OR CONSTRUCTION.

1 0-10V DIMMING WIRING DIAGRAM

NO SCALE

AGD ARCHITECTURE | DESIGN

ANDREW GOODWIN DESIGNS
1238 MONTEREY STREET
SAN LUIS OBISPO, CA 93422
t: (805) 439-1611
www.andrewgoodwin.us

architect: andrew.goodwin, aia
andrew@andrewgoodwin.us

AURUM CONSULTING ENGINEERS MONTEREY BAY, INC.

Project No. 24-160.00

404 W. Franklin St. • Suite 100 • Monterey, CA 93940
T.831.646.3330 • F.831.646.3336 • www.acemb.com

These drawings are instruments of service and are the property of AURUM CONSULTING ENGINEERS MONTEREY BAY, INC. All designs and other information in the drawings are for use on the specified project and shall not be used otherwise without written permission of AURUM CONSULTING ENGINEERS MONTEREY BAY, INC.

These drawings are instruments of service and are the property of Andrew Goodwin Designs, Inc. The information represented on these drawings are exclusively for the project indicated and shall not be transferred or otherwise reproduced without express written permission of Andrew Goodwin. Copyright 2023

REVISIONS

REV # | REV DATE | REV DESCRIPTION

SEAL

NOT FOR CONSTRUCTION

PROJECT

TRANQUILLITY HIGH SCHOOL
AQUATIC CENTER MODERNIZATION
6052 Juanche Ave,
Tranquillity, CA 93668

CLIENT

GOLDEN PLAINS UNIFIED SCHOOL DISTRICT

SHEET TITLE
ELECTRICAL DETAILS

PHASE DESCRIPTION
100% CD FCHD APPROVAL
SWIMMING POOL

DATE: 8/26/2025

TECHNICIAN: RT

PROJECT MANAGER: TP

JOB NUMBER: 791

SHEET NUMBER
E602-1

PLOT DATE: 3/21/2025 3:26:20 PM

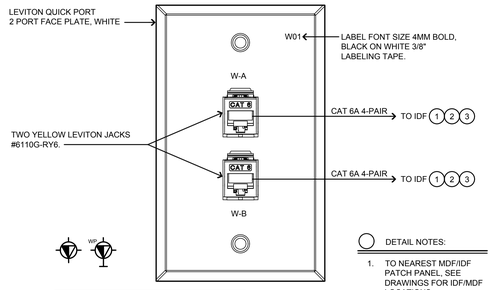

DETAIL NOTES:

1. TO NEAREST MDF/IDF PATCH PANEL, SEE DRAWINGS FOR IDF/MDF LOCATIONS.
2. LABEL PAIRS USED AND LABEL ROOM NUMBER.
3. LABEL PER I.T. DEPT. STANDARDS.

GENERAL NOTE:

CONTRACTOR SHALL COIL AN ADDITIONAL 20 FEET OF CABLE AT EACH ACCESS POINT.

8 WIRELESS OUTLET

NO SCALE

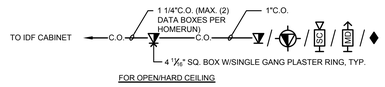

7 TELE/DATA OUTLET DETAIL

NO SCALE

LMRC-211

1-RELAY 0-10V DIMMING CONTROLLER
Provides one (1) controllable switch-leg
with one (1) channel of 0-10V dimming

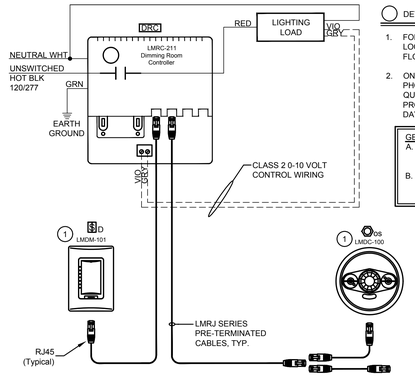

DETAIL NOTES:

1. FOR DEVICE QUANTITY AND LOCATION; SEE LIGHTING FLOOR PLANS.
2. ONE ZONE DAY LIGHT PHOTOCELL; SEE PLANS FOR QUANTITIES & LOCATIONS. PROGRAM ZONE 1 (PRIMARY DAY LIT ZONE) AT 40FC.

GENERAL NOTES:

A. ALL PART NUMBERS ARE WATTSTOPPER.

B. DISREGARD SYMBOLS/CONTROLS NOT SHOWN IN PLANS.

6 1-ZONE DIMMING LIGHTING CONTROLS

NO SCALE

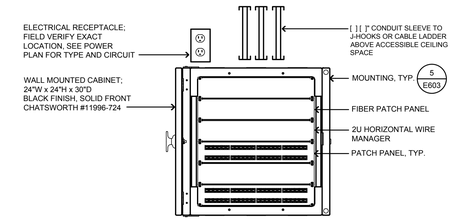

GENERAL NOTES:

1. FIELD VERIFY EXACT LOCATION OF CABINET WITH IT DEPARTMENT BEFORE ROUGH-IN. MOUNT SO THAT CABINET DOOR CAN SWING FULLY OPEN.
2. PROVIDE ALL MISCELLANEOUS CONNECTORS, WIRE MANAGEMENT, SHELF BRACKETS, CABLE SPLICE KITS, MOUNTING HARDWARE, ETC. AS REQUIRED FOR A COMPLETE INSTALLATION.
3. PROVIDE PATCH PANELS FOR QUANTITY OF DATA OUTLETS IN PROJECT PLUS 20%.
4. LEAVE ADEQUATE CABLE LENGTH TO ALLOW DOOR TO SWING FULLY OPEN.
5. PROVIDE AND INSTALL #6 TO PANEL OR MAIN GROUND BUS BAR.

4 WALL CABINET DETAIL

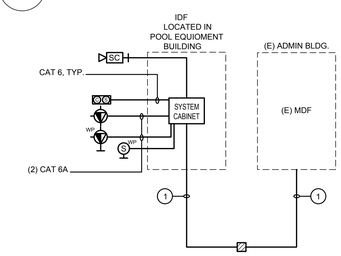

DETAIL NOTES:

1. (2) 12-STRAND SINGLE-MODE FIBER OPTIC CABLE.

GENERAL NOTES:

A. LEAVE 36 INCHES OF EXCESS CABLE AT IDF LOCATION BEFORE MAKING TERMINATIONS FOR USE AS SERVICE LOOP. SECURE EXCESS CABLE IN NEAT WORKMAN-LIKE MANNER.

B. CABLE INSTALLED IN UNDERGROUND CONDUITS SHALL HAVE JACKETS THAT ARE RATED SPECIFICALLY FOR UNDERGROUND USE.

C. SEE PLANS FOR QUANTITY.

3 DATA SYSTEMS RISER DIAGRAM

NO SCALE

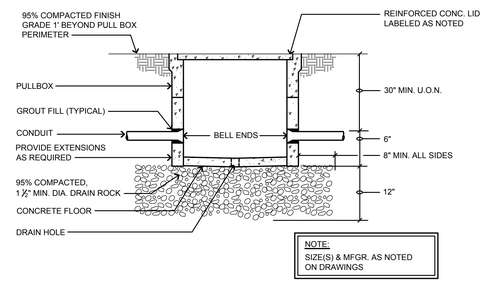

NOTE:

SIZE(S) & MFGR. AS NOTED ON DRAWINGS

2 TYPICAL PULLBOX DETAIL

NO SCALE

CLOSED BOTTOM

SIGNAL CABLE SCHEDULE

I.D.	USE	DESCRIPTION	REMARKS
A	INTRUSION	#16/4 CONDUCTOR	FROM IA PANEL TO KEYPAD

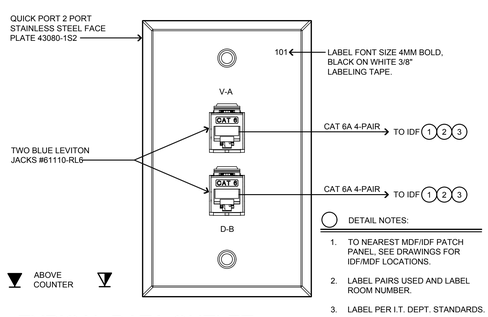

DETAIL NOTES:

1. TO NEAREST MDF/IDF PATCH PANEL, SEE DRAWINGS FOR IDF/MDF LOCATIONS.
2. LABEL PAIRS USED AND LABEL ROOM NUMBER.
3. LABEL PER I.T. DEPT. STANDARDS.

9 TYPICAL DATA OUTLET

NO SCALE

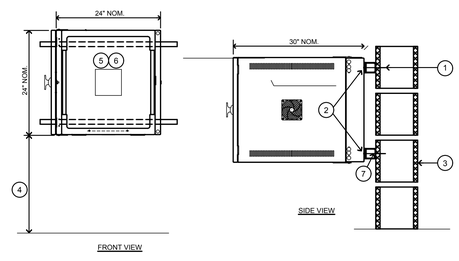

DETAIL NOTES:

1. 3/8"DIA. x 4" SIMPSON TITEN-HD ANCHOR @ 16" O.C. MAX. (MIN. 3 BOLTS PER UNISTRUT ATTACHMENT)
2. P1000 UNISTRUT.
3. CMU BUILDING WALL.
4. FIELD VERIFY MOUNTING HEIGHT.
5. LEAVE ADEQUATE CABLE LENGTH TO ALLOW DOOR TO SWING OPEN FULLY.
6. WEIGHT OF CABINET = 200 LBS (MAX).
7. ATTACH UNIT TO UNISTRUT W/ UNISTRUT HEX HEAD CAP SCREWS AND CHANNEL NUT W/ SPRING TYP. AT EA. MOUNTING LOCATION (4 TOTAL).

GENERAL NOTES:

INSTALL IN CONFORMANCE WITH ICC ESR-1056 AND MANUFACTURER'S SPECIFICATION.

5 WALL CABINET MOUNTING DETAIL

NO SCALE

COUNTY OF FRESNO ENVIRONMENTAL HEALTH DIVISION
1221 Fulton Street – 3rd Floor (559) 600-3357
APPROVED WITH NOTED CORRECTIONS AND SUBJECT TO FIELD INSPECTIONS
BY: DATE: 8/26/25
APPROVAL OF THIS PLAN DOES NOT CONSTITUTE PERMISSION TO VIOLATE ANY APPLICABLE STATE OR COUNTY ORDINANCE, OR STATE LAW, AND SHALL NOT PREVENT THE DEPARTMENT FROM REQUIRING CORRECTION OF ERRORS OR OMISSIONS IN PLANS, SPECIFICATIONS OR CONSTRUCTION.

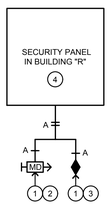

DETAIL NOTES:

1. SEE PLANS FOR DEVICE QUANTITY AND LOCATIONS AT EACH BLDG.
2. MOTION DETECTORS.
3. DOOR CONTACTS.
4. FIELD VERIFY EXACT LOCATION.

GENERAL NOTES:

A. U.O.N., ALL SHOWN IS NEW.

B. AT EACH LOCATION SHOWN ON POWER & SYSTEMS PLANS FOR TELEPHONE, PROVIDE PHONE COMPATIBLE WITH DISTRICT STANDARDS.

C. WHERE CABLES ARE TO BE INSTALLED OUTSIDE OR UNDERGROUND; THEY SHALL BE RATED FOR SUCH USE.

1 SECURITY RISER DIAGRAM

NO SCALE

AGD ARCHITECTURE | DESIGN

ANDREW GOODWIN DESIGNS
1238 MONTEREY STREET
SAN LUIS OBISPO, CA 93422
t: (805) 439-1611
www.andrewgoodwin.us

architect: andrew goodwin, aia
andrew@andrewgoodwin.us

AURUM CONSULTING ENGINEERS
MONTEREY BAY, INC.

Project No. 24-160.00

404 W. Franklin St. • Suite 100 • Monterey, CA 93940
T.831.646.3330 • F.831.646.3336 • www.acemb.com

These drawings are instruments of service and are the property of AURUM CONSULTING ENGINEERS MONTEREY BAY, INC. All designs and other information in the drawings are for use on the specified project and shall not be used otherwise without written permission of AURUM CONSULTING ENGINEERS MONTEREY BAY, INC.

These drawings are instruments of service and are the property of Andrew Goodwin Designs, Inc. The information represented on these drawings are exclusively for the project indicated and shall not be transferred or otherwise reproduced without express written permission of Andrew Goodwin. Copyright 2023

REVISIONS

REV # | REV DATE | REV DESCRIPTION

SEAL

NOT FOR CONSTRUCTION

PROJECT

TRANQUILLITY HIGH SCHOOL
AQUATIC CENTER MODERNIZATION
6052 Juanche Ave,
Tranquillity, CA 93668

CLIENT

GOLDEN PLAINS UNIFIED SCHOOL DISTRICT

SHEET TITLE
ELECTRICAL DETAILS

PHASE DESCRIPTION
100% CD FCHD APPROVAL
SWIMMING POOL

DATE: 8/26/2025

TECHNICIAN: RT

PROJECT MANAGER: TP

JOB NUMBER: 791

SHEET NUMBER
E603-1

PLOT DATE: 3/21/2025 3:26:20 PM

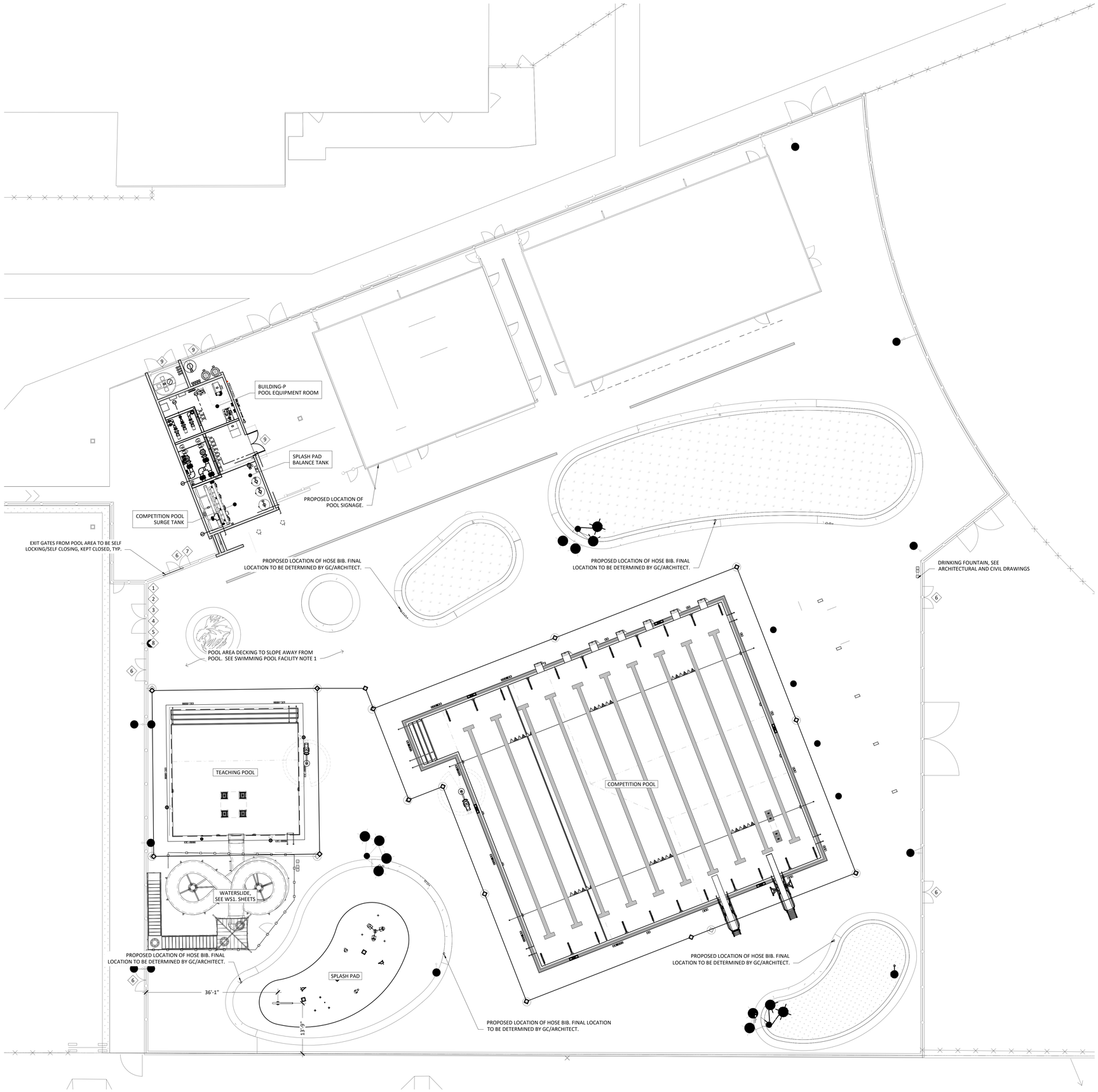

GENERAL NOTES:

1. ALL WORK SHALL CONFORM TO CBC 2022 / IBC 2021 EDITION AND ALL AMENDMENTS THERETO BY THE LOCAL AUTHORITIES, ESPECIALLY CBC AMENDMENTS.
2. ALL PLAN DIMENSIONS SHALL BE VERIFIED PRIOR TO THE START OF WORK IN ACCORDANCE WITH AS-BUILT AND/OR IN-FIELD CONDITIONS. ANY DISCREPANCIES SHALL BE REPORTED TO THE ENGINEER.
3. ANY SUBSTITUTIONS OR ALTERNATE DETAILS SHALL BE REVIEWED BY THE ARCHITECT/ENGINEER. SUCH REVIEW WILL REQUIRE A TIME AND MATERIALS CONTRACT TO BE SET UP WITH THE GENERAL CONTRACTOR WITH NO GUARANTEE THAT THE SUBSTITUTION WILL BE ALLOWED.

INTERPRETATION OF DRAWINGS & SPECIFICATIONS

1. CONTRACTOR SHALL VERIFY ALL DIMENSIONS WITH PROJECT DOCUMENTS PRIOR TO COMMENCING ANY WORK.
2. DO NOT SCALE DRAWINGS. CONTACT THE ENGINEER FOR ANY DIMENSIONS NOT SHOWN.
3. WHEN PROVIDED, WRITTEN SPECIFICATIONS FOR THIS PROJECT ARE ARRANGED IN SEVERAL SECTIONS, BUT SUCH SEPARATION SHALL NOT BE CONSIDERED AS THE LIMITS OF THE WORK REQUIRED OF ANY SEPARATE TRADE. THE TERMS AND CONDITIONS OF SUCH LIMITATIONS ARE WHOLLY BETWEEN THE CONTRACTOR AND ITS SUBCONTRACTORS.
4. IN GENERAL, THE WORKING DETAILS WILL INDICATE DIMENSIONS, POSITION AND TYPE OF CONSTRUCTION. SPECIFICATIONS WILL INDICATE QUALITIES AND METHODS. ANY WORK INDICATED ON THE WORKING DETAILS AND NOT MENTIONED IN SPECIFICATIONS, OR VICE VERSA, SHALL BE FURNISHED AS THOUGH FULLY SET FORTH IN BOTH. WORK NOT PARTICULARLY DETAILED, MARKED OR SPECIFIED, SHALL BE THE SAME AS SIMILAR PARTS THAT ARE DETAILED, MARKED OR SPECIFIED. IF CONFLICTS OCCUR ON DRAWINGS AND/OR SPECIFICATIONS, THE ENGINEER SHALL BE NOTIFIED IMMEDIATELY.
5. SHOULD A CONFLICT APPEAR IN THE WORKING DETAILS OR SPECIFICATIONS OR IN WORK DONE BY OTHERS AFFECTING THIS WORK, THE CONTRACTOR SHALL PROVIDE WRITTEN NOTICE TO THE ENGINEER IN DUE TIME SO AS NOT TO AFFECT THE CONSTRUCTION SCHEDULE. IF THE CONTRACTOR PROCEEDS WITH THE WORK SO AFFECTED WITHOUT HAVING GIVEN SUCH WRITTEN NOTICE AND WITHOUT RECEIVING THE NECESSARY INSTRUCTIONS IN WRITING FROM THE ENGINEER, THEN THE CONTRACTOR SHALL HAVE NO VALID CLAIM AGAINST THE OWNER FOR THE COST OF SO PROCEEDING AND SHALL MAKE GOOD ANY RESULTING DAMAGE OR DEFECT. NO VERBAL APPROVAL, DECISION, OR INSTRUCTION SHALL BE VALID OR BE THE BASIS FOR ANY CLAIM AGAINST THE OWNER, ITS OFFICERS, EMPLOYEES OR AGENTS. THE FOREGOING INCLUDES TYPICAL ERRORS IN THE SPECIFICATIONS OR NOTATIONAL ERRORS IN THE WORKING DETAILS WHERE THE INTERPRETATION IS DOUBTFUL OR WHERE THE ERROR IS SUFFICIENTLY APPARENT AS TO PLACE A REASONABLY PRUDENT CONTRACTOR ON NOTICE THAT, SHOULD THEY ELECT TO PROCEED, THEY ARE DOING SO AT THEIR OWN RISK.
6. IN THE CASE OF A CONFLICT BETWEEN DESIGN DRAWINGS AND SPECIFICATIONS, THE MORE RESTRICTIVE CONDITION SHALL TAKE PRECEDENCE UNLESS WRITTEN APPROVAL HAS BEEN GIVEN FOR THE LESS RESTRICTIVE.
7. WHERE NO SPECIFIC DETAIL IS SHOWN, THE CONSTRUCTION SHALL BE IDENTICAL OR SIMILAR TO THAT INDICATED FOR LIKE CASES OF CONSTRUCTION ON THIS PROJECT. DRAWINGS ARE INTENDED TO BE USED AS AN ENTIRE SET. REFER TO THE SHEET INDEX AND NOTIFY THE ENGINEER IF ANY SHEETS ARE NOT INCLUDED. SHOULD THERE BE ANY QUESTION, CONTACT THE ENGINEER PRIOR TO PROCEEDING.

SWIMMING POOL SIGNAGE KEYNOTES

KEY	DESCRIPTION
1	THE POOL USER CAPACITY SHALL BE BASED ON ONE USER FOR EVERY 20 SQUARE FEET OF WATER SURFACE AREA. POOL USER CAPACITY SIGN SHALL BE POSTED WITH MINIMUM 4 INCH LETTERS THAT READS: "MAXIMUM BATHER CAPACITY: XX PERSONS" (SEE POOL DESIGN DATA FOR NUMBER OF BATHERS). SEE 1/SP0.1.
2	THE EMERGENCY TELEPHONE NUMBER SHALL BE POSTED WITH MINIMUM 4 INCH LETTERS THAT READS: "9-1-1". THE NUMBER OF THE NEAREST EMERGENCY SERVICES AND THE NAME AND STREET ADDRESS OF THE POOL FACILITY SHALL BE POSTED WITH A MINIMUM 1 INCH LETTERS. SEE 2/SP0.1.
3	AN ILLUSTRATED DIAGRAM SHALL BE POSTED WITH MINIMUM 1/4 INCH LETTERS OF ARTIFICIAL RESPIRATION AND CPR PROCEDURES. SEE 5/SP0.1.
4	WHERE NO LIFEGUARD SERVICE IS PROVIDED, A WARNING SIGN SHALL BE POSTED WITH MINIMUM 4 INCH LETTERS THAT READS: "WARNING: NO LIFEGUARD ON DUTY" ADDITIONALLY THE SIGN SHALL STATE IN LETTERS AT LEAST 1 INCH IN HEIGHT: "CHILDREN SHOULD NOT USE POOL WITHOUT ADULT SUPERVISION". SEE 3/SP0.1.
5	FOR POOLS WITH A MAXIMUM WATER DEPTH OF 6'-0" OR LESS, A SIGN SHALL BE POSTED WITH MINIMUM INCH LETTERS THAT READS: "NO DIVING". SEE 4/SP0.1.
6	EXTERIOR SIDE OF GATES AND DOORS LEADING INTO THE POOL ENCLOSURE AREA SHALL HAVE A SIGN POSTED WITH MINIMUM 4 INCH LETTERS THAT READS: "KEEP CLOSED". SEE 6/SP0.1.
7	A SIGN IN LETTERS AT LEAST 1 INCH HIGH AND IN A LANGUAGE OR DIAGRAM THAT IS CLEARLY STATED SHALL BE POSTED AT THE ENTRANCE AREA THAT READS: PERSONS HAVING CURRENTLY ACTIVE DIARRHEA OR WHO HAVE HAD ACTIVE DIARRHEA WITHIN THE PREVIOUS 14 DAYS SHALL NOT BE ALLOWED TO ENTER THE POOL.". SEE 8/SP0.1.
8	A SIGN SHALL BE POSTED WITH A MINIMUM 4 INCH LETTERS THAT READS: "FIRE DEPARTMENT" ADDITIONALLY THE SIGN SHALL STATE IN LETTERS AT LEAST 1 INCH IN HEIGHT CONTAINING THE PHONE NUMBER AND ADDRESS OF THE FIRE DEPARTMENT. SEE 7/SP0.1.
9	CHEMICAL HAZARD SIGNAGE, COORDINATE EACH SIGN WITH EACH ROOM ACCORDING TO CHEMICAL TYPE. SEE 9/SP0.1.

COUNTY OF FRESNO ENVIRONMENTAL HEALTH DIVISION
1221 Fulton Street - 3rd Floor (559) 600-3357
APPROVED
WITH NOTED CORRECTIONS AND
SUBJECT TO FIELD INSPECTIONS
DATE 8/26/25
BY
APPROVAL OF THIS PLAN DOES NOT CONSTITUTE PERMISSION TO VIOLATE ANY APPLICABLE CITY OR COUNTY ORDINANCE, OR STATE LAW, AND SHALL NOT PREVENT THIS DEPARTMENT FROM REQUIRING CORRECTION OF ERRORS OR OMISSIONS IN PLANS, SPECIFICATIONS OR CONSTRUCTION.

SWIMMING POOL SIGNAGE PLAN
3/32" = 1'-0"
1

AGD
ARCHITECTURE | DESIGN

ANDREW GOODWIN DESIGNS
1238 MONTEREY STREET
SAN LUIS OBISPO, CA 93422
t: (805) 439-1611
www.andrewgoodwin.us

RSM
Design | Engineering
ROGERS STRINGER MCCLELLAND
1981 N. BROADWAY, SUITE 202
WALNUT CREEK, CA 94596
PH. (925) 217-6619
www.rsm-de.com

These drawings are instruments of service and are the property of Andrew Goodwin Designs, Inc. The information represented on these drawings are exclusively for the project indicated and shall not be transferred or otherwise reproduced without express written permission of Andrew Goodwin. Copyright 2023

SEAL

NOT FOR CONSTRUCTION

PROJECT

TRANQUILLITY HIGH SCHOOL
AQUATIC CENTER MODERNIZATION
6052 Juanche Ave,
Tranquillity, CA 93668

CLIENT

GOLDEN PLAINS UNIFIED SCHOOL DISTRICT

SHEET TITLE

PROJECT SITE PLAN

PHASE DESCRIPTION
100% CD FCHD APPROVAL
SWIMMING POOL

DATE: 8/26/2025
TECHNICIAN: RD
PROJECT MANAGER: BR
JOB NUMBER: 791

SHEET NUMBER
SP0.0-1

PLOT DATE: 4/24/2025 3:26:20 PM

Copyright © **2025** RSM, Inc.-All Rights Reserved-This document was prepared for use only by the client, only for the purposes stated, and within a reasonable time from issuance. Non-commercial, educational, and scientific use of this document by regulatory agencies is regarded as a "fair use" and not a violation of copyright. Regulatory agencies may make additional copies of this document for internal use. Copies may also be made available to the public as required by law. The reprint must acknowledge the copyright and indicate that permission to reprint has been received.

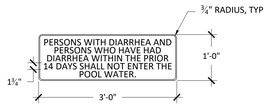

NOTES:
1. 1/8" THICK ALUMINUM COMPOSITE PANEL
2. DIGITAL VINYL PRINT
3. MATTE UV OVERLAMINATE
4. 1.75" MIN TEXT
5. QTY 1

DIARRHEA SIGN
3/4" = 1'-0"
8

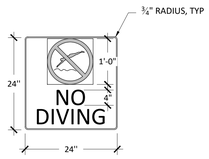

NOTES:
1. 1/8" THICK ALUMINUM COMPOSITE PANEL
2. DIGITAL VINYL PRINT
3. MATTE UV OVERLAMINATE
4. 4" TEXT
5. QTY 1

NO DIVING SIGN
3/4" = 1'-0"
4

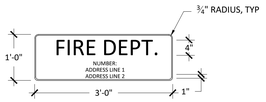

NOTES:
1. 1/8" THICK ALUMINUM COMPOSITE PANEL
2. DIGITAL VINYL PRINT
3. MATTE UV OVERLAMINATE
4. 4" LARGE TEXT, 1" SMALL TEXT
5. QTY 1

FIRE DEPT. SIGN
3/4" = 1'-0"
7

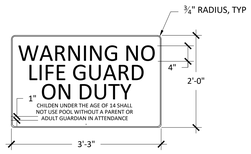

NOTES:
1. 1/8" THICK ALUMINUM COMPOSITE PANEL
2. DIGITAL VINYL PRINT
3. MATTE UV OVERLAMINATE
4. 4" LARGE TEXT, 1" SMALL TEXT
5. QTY 1

NO LIFEGUARD SIGN
3/4" = 1'-0"
3

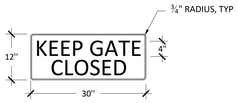

NOTES:
1. 1/8" THICK ALUMINUM COMPOSITE PANEL
2. DIGITAL VINYL PRINT
3. MATTE UV OVERLAMINATE
4. 4" TEXT
5. QTY 5

KEEP CLOSED SIGN
3/4" = 1'-0"
6

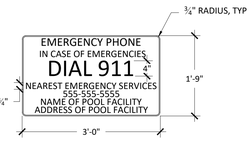

NOTES:
1. 1/8" THICK ALUMINUM COMPOSITE PANEL
2. DIGITAL VINYL PRINT
3. MATTE UV OVERLAMINATE
4. 4" LARGE TEXT, 1.75" SMALL TEXT
5. QTY 1

TELEPHONE SIGN
3/4" = 1'-0"
2

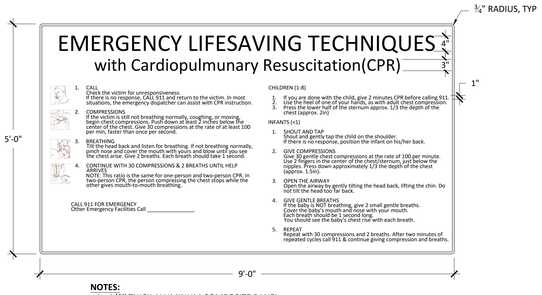

NOTES:
1. 1/8" THICK ALUMINUM COMPOSITE PANEL
2. DIGITAL VINYL PRINT
3. MATTE UV OVERLAMINATE
4. 4" LARGE TEXT, 1" SMALL TEXT
5. QTY 1

CPR SIGN
3/4" = 1'-0"
5

NOTES:
1. 1/8" THICK ALUMINUM COMPOSITE PANEL
2. DIGITAL VINYL PRINT
3. MATTE UV OVERLAMINATE
4. LARGE TEXT 4"
5. QTY 1

BATHER LOAD SIGN
3/4" = 1'-0"
1

CARBON DIOXIDE

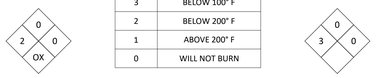

MURATIC ACID

SODIUM HYPOCHLORITE

FIRE HAZARD (RED)	
RATING	DESCRIPTION
4	BELOW 73° F
3	BELOW 100° F
2	BELOW 200° F
1	ABOVE 200° F
0	WILL NOT BURN

HEALTH HAZARD (BLUE)	
RATING	DESCRIPTION
4	DEADLY
3	EXTREME DANGER
2	HAZARDOUS
1	SLIGHTLY HAZARDOUS
0	NORMAL MATERIAL

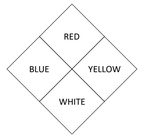

INSTABILITY HAZARD (YELLOW)	
RATING	DESCRIPTION
4	MAY DETONATE
3	SHOCK & HEAT MAY DETONATE
2	VIOLENT CHEMICAL CHANGE
1	UNSTABLE IF HEATED
0	STABLE

CHEMICAL HAZARD WARNING SIGNAGE
N.T.S.
9

AGD
ARCHITECTURE | DESIGN

ANDREW GOODWIN DESIGNS
1238 MONTEREY STREET
SAN LUIS OBISPO, CA 93422
t: (805) 439-1611
www.andrewgoodwin.us

RSM
Design | Engineering
ROGERS STRINGER MCCLELLAND
1981 N. BROADWAY, SUITE 202
WALNUT CREEK, CA 94596
PH. (925) 217-6619
www.rsm-de.com

These drawings are instruments of service and are the property of Andrew Goodwin Designs, Inc. The information represented on these drawings are exclusively for the project indicated and shall not be transferred or otherwise reproduced without express written permission of Andrew Goodwin.
Copyright 2023

SEAL

NOT FOR CONSTRUCTION

PROJECT

TRANQUILLITY HIGH SCHOOL
AQUATIC CENTER MODERNIZATION
6052 Juanche Ave,
Tranquillity, CA 93668

CLIENT

GOLDEN PLAINS UNIFIED SCHOOL DISTRICT

COUNTY OF FRESNO ENVIRONMENTAL HEALTH DIVISION
1221 Fulton Street – 3rd Floor (559) 600-3357
APPROVED
WITH NOTED CORRECTIONS AND SUBJECT TO FIELD INSPECTIONS
BY: DATE: 8/26/25
APPROVAL OF THIS PLAN DOES NOT CONSTITUTE PERMISSION TO VIOLATE ANY APPLICABLE CITY OR COUNTY ORDINANCE, OR STATE LAW, AND SHALL NOT PREVENT THIS DEPARTMENT FROM REQUIRING CORRECTION OF ERRORS OR OMISSIONS IN PLANS, SPECIFICATIONS OR CONSTRUCTION.

SHEET TITLE

SWIMMING POOL SIGNAGE DETAILS

PHASE DESCRIPTION
100% CD FCHD APPROVAL SWIMMING POOL

DATE: 8/26/2025

TECHNICIAN: RD

PROJECT MANAGER: BR

JOB NUMBER: 791

SHEET NUMBER
SP0.1-1

PLOT DATE: 4/24/2025 3:26:20 PM

Copyright © **2025** RSM, Inc.-All Rights Reserved-This document was prepared for use only by the client, only for the purposes stated, and within a reasonable time from issuance. Non-commercial, educational, and scientific use of this document by regulatory agencies is regarded as a "fair use" and not a violation of copyright. Regulatory agencies may make additional copies of this document for internal use. Copies may also be made available to the public as required by law. The reprint must acknowledge the copyright and indicate that permission to reprint has been received.

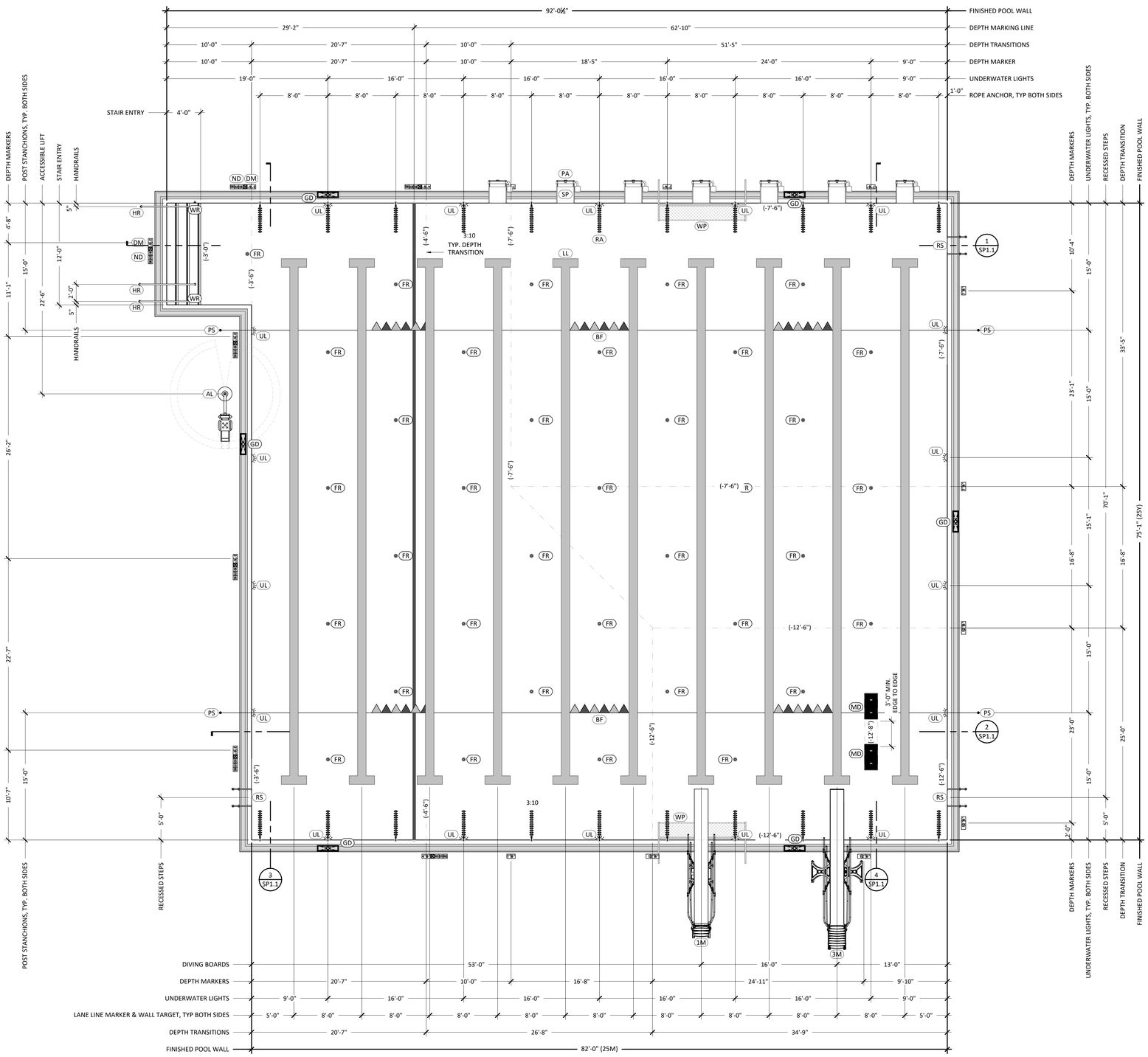

POOL LAYOUT PLAN GENERAL NOTES:

1. POOL FINISH PER FINISH SCHEDULE.
2. PLAN IS TO BE USED IN CONJUNCTION WITH THE POOL STRUCTURAL PLANS, POOL PIPING PLAN AND POOL ELECTRICAL PLANS. REFER TO THOSE DRAWINGS & DETAILS FOR INFORMATION NOT SHOWN ON THIS PLAN.
3. ALL DIMENSIONS SHALL BE VERIFIED PRIOR TO START OF WORK. ANY DISCEPANCIES SHALL BE REPORTED TO THE ENGINEER.
4. OVERALL DIMENSIONS SHOWN ARE FROM INSIDE FINISH OF WALLS & FLOORS.
5. FEATURES OR EQUIPMENT DIMENSIONS SHOWN ARE FROM CENTER TO CENTER.
6. DEPTH MARKERS AND WARNING SIGNS ARE SHOWN IN APPROXIMATE LOCATIONS. DEPTH MARKERS AND WARNING SIGNS MAY NOT EXCEED 25'-0" APART PER LOCAL CODE. NO DIVING WARNING SIGNAGE ONLY REQUIRED WHEN POOL DEPTH IS LESS THAN 6 FEET.
7. LIFEGUARD EQUIPMENT SHALL BE PROVIDED AS REQUIRED AS NOTED ON THE DRAWINGS.
8. ALL METAL COMPONENTS TO BE BONDED & GROUNDED PER C.E.C.
9. ALL APPLICABLE STATE AND LOCAL LAWS AND CODES SHALL BE FOLLOWED.

SWIMMING POOL CERTIFICATION:

THE CONTRACTOR SHALL PROVIDE THE SERVICES OF A REGISTERED ENGINEER OR LAND SURVEYOR WHO SHALL MEASURE AND CERTIFY THE ELEVATIONS OF THE GUTTER LIP AT 10 FOOT CENTERS AS WELL AS THE LENGTH OF EACH LANE FOR EACH POSSIBLE RACING COURSE. COURSE LENGTH SURVEY MUST BE MADE WITH THE POOL FILLED WITH WATER BETWEEN 78 AND 82 DEGREES FAHRENHEIT. FORMS FOR THE LANE MEASUREMENTS ARE AVAILABLE FROM USA SWIMMING AND MUST BE SUBMITTED TO USA SWIMMING BY THE CONTRACTOR.

COMPETITION POOL DESIGN DATA	
SIZE (LENGTH BY WIDTH):	92 FT - 75 FT
DEPTH PROFILE:	3 FT 0 IN - 12 FT 6 IN
SURFACE AREA:	6,277 SF
PERIMETER:	334 FT
VOLUME:	352,352 GAL
MAX BATHER LOAD:	313 BATHERS

COMPETITION POOL SYSTEM DESIGN DATA	
TURNOVER RATE:	5.87 HRS
RECIRCULATION RATE:	1000 GPM
FILTER AREA:	66.00 SF
FILTRATION RATE:	15.15 GPM/SF
BACKWASH FLOW RATE:	297 GPM

COMPETITION POOL SUCTION OUTLET DATA	
RECIRCULATION PUMP MAX FLOW RATE @60FT:	1000 GPM
MAIN DRAIN MAX APPROVED FLOW RATE:	2480 GPM
SUCTION PIPE VELOCITY @ DESIGN FLOW RATE:	4.09 FPS

COMPETITION POOL FINISH SCHEDULE	
POOL FINISH	BY MYRTHA, COLOR TO BE WHITE
WATER LINE TILE	6" X 6" GLAZED CERAMIC TILE BY DAL-TILE OR APPROVED EQUAL. CONTRASTING COLOR BY OWNER
GUTTER TILE	1" X 1" MOSAIC GLAZED TILE MANUFACTURERED BY DAL-TILE OR APPROVED EQUAL. COLOR BY OWNER
STEP TRIM	MYRTHA APPLIED ACRYLIC. COLOR BY OWNER
HANDHOLD TILE	C701 TILE DY DAL-TILE OR APPROVED EQUAL. COLOR BY OWNER. TILE TO BE SLIP RESISTANT.
LANE LINE MARKER FINISH	MYRTHA APPLIED ACRYLIC. COLOR BY OWNER
WALL TARGET FINISH	MYRTHA APPLIED ACRYLIC. COLOR BY OWNER
4' 6" DEPTH TRANSITION FINISH	MYRTHA APPLIED ACRYLIC TO BE SLIP RESISTANT. COLOR BY OWNER
POOL FLOOR	MYRTHA SOFTWALK ANTI-SLIP FLOORING, COLOR WHITE. UP TO 4 FT 6 IN DEPTH

COMPETITION POOL LAYOUT EQUIPMENT SCHEDULE

CALL OUT	EQUIPMENT	MODEL/DESCRIPTION	DETAIL
DM	VERTICAL DEPTH MARKERS	6"X6" GLAZED CERAMIC TILE	4/SP1.6
DM	DECK DEPTH MARKERS	6"X6" SLIP RESISTANT CERAMIC TILE	4/SP1.6
ND	NO DIVING MARKER	6"X6" SLIP RESISTANT CERAMIC TILE	5/SP1.6
RS	RECESSED STEPS	SUPPLIED BY MYRTHA	9/SP1.6
RS	GRAB RAILS	PRETZEL 304L STAINLESS STEEL GRAB RAILS, ESCUTCHEONS AND BRONZE ANCHORS BY S.R. SMITH, SPECTRUM, OR APPROVED EQUAL. 1.90 IN DIAMETER 0.145" WALL THICKNESS	9/SP1.6
HR	HANDRAILS	CUSTOM 304L STAINLESS STEEL RAILS, ESCUTCHEONS AND BRONZE DECK ANCHORS BY S.R. SMITH OR APPROVED EQUAL. 1.90 IN DIAMETER 0.145" WALL THICKNESS. POOL STAIR HANDRAIL ANCHOR SUPPLIED BY MYRTHA.	2/SP1.6
AL	ADA ACCESS LIFT	SPLASH! ER BY S.R. SMITH. LIFT SHALL INCLUDE ALL REQUIRED ACCESSORIES.	13/SP1.6
UL	UNDERWATER LIGHTS	J & J ELECTRONICS UNDERWATER POOL LIGHT, 500 W EQUIVALENT, STAINLESS STEEL VINYL POOL NICHE WITH CHROME SEALING RING	6/SP1.6
1M	1 METER DIVING PLATFORM	1 METER REAR ACCESS DIVING STAND WITH HANDRAILS AND 16 FOOT SLIP RESISTANT SPRINGBOARD BY DURAFLEX.	12/SP1.6
3M	3 METER DIVING PLATFORM	3 METER REAR ACCESS DIVING STAND WITH HANDRAILS AND 16 FOOT SLIP RESISTANT SPRINGBOARD BY DURAFLEX.	14/SP1.6
SP	STARTING PLATFORMS	XCELLERATOR SINGLE POST, W/ SIDE STEP, BY SPECTRUM.	9/SP6.2
PA	STARTING PLATFORM ANCHOR	SINGLE POST ANCHOR BY STARTING PLATFORM MANUFACTURER	9/SP6.2
BF	BACKSTROKE FLAGS	PRE-STRUNG 11" BY 14.5" NYLON BACKSTROKE FLAGS AND ALL NECESSARY HARDWARE BY KIEFER, COMPETITOR, ANTI-WAVE, OR APPROVED EQUAL.	NA
2Y	25Y LANE LINE DIVIDERS	6" DISKS - 3' ALTERNATING COLOR, 5M SOLID COLOR AT EACH END, WITH 15M RESURFACING MARKERS BY COMPETITOR, ANTI-WAVE, OR APPROVED EQUAL.	NA
WB	WATERPOLO BOUNDRY COURSE	FLOATING LINES WITH WAVE QUELLING FLOATS AND A 3/16" STAINLESS STEEL CABLE WITH SUPERTENSIONER	NA
RA	ROPE ANCHORS	MYRTHA LOW-PROFILE GUTTER MOUNTED FLOATING ROPE ANCHORS	10/SP1.6
PS	STANCHION POSTS	8 FT STAINLESS STEEL POST, 1.90" OD 316L, WITH BRONZE STANCHION SOCKET AND SLIP FIT COVER, 0.145" MINIMUM WALL THICKNESS	11/SP1.6
PS	STANCHION ANCHORS	CAST BRONZE STANCHION ANCHOR SOCKET W/ MINIMUM 6 INCH EMBEDMENT, 1.90" DIAMETER AND SLIP FIT COVER	11/SP1.6
WP	WATER POLO GOAL	MALMSTEN WATERPOLO GOAL	NA

COMPETITION POOL RECIRCULATION EQUIPMENT SCHEDULE

CALL OUT	EQUIPMENT	MODEL/DESCRIPTION	DETAIL
MD	MAIN DRAIN	DALDERADO 18 X 36 X 28 SUMP AND GRATE, 10" PORT, MAXIMUM FLOW RATE 2,480 GPM WITH MYRTHA COLLAR	1/SP3.4
GD	GUTTER DROP BOX	GUTTER DROP BOX BY MYRTHA	4/SP3.4
FR	FLOOR RETURN INLET	1.5" FLOOR INLET BY MYRTHA	5/SP3.4
WR	WALL RETURN INLET	2" WALL RETURN INLET BY MYRTHA	3/SP3.4

ALL EQUIPMENT NOTED ARE BASIS OF DESIGN & DESIGNATE MINIMUM PERFORMANCE STANDARDS. EQUIVALENT PRODUCTS MAY BE USED PROVIDED THEY ARE SUBMITTED TO ENGINEER OF RECORD FOR APPROVAL.

COUNTY OF FRESNO ENVIRONMENTAL HEALTH DIVISION
1221 Fulton Street – 3rd Floor (559) 600-3357
APPROVED
WITH NOTED CORRECTIONS AND
SUBJECT TO FIELD INSPECTIONS
BY: DATE: 8/26/25
APPROVAL BY THE CHAIRMAN DOES NOT CONSTITUTE PERMISSION TO VIOLATE ANY APPLICABLE CITY OR COUNTY ORDINANCE, OR STATE LAW, AND SHALL NOT PREVENT THIS DEPARTMENT FROM REQUIRING CORRECTION OF ERRORS OR OMISSIONS IN PLANS, SPECIFICATIONS OR CONSTRUCTION.

AGD
ARCHITECTURE | DESIGN

ANDREW GOODWIN DESIGNS
1238 MONTEREY STREET
SAN LUIS OBISPO, CA 93422
t: (805) 439-1611
www.andrewgoodwin.us

RSM
Design | Engineering
ROGERS STRINGER MCCLELLAND
1981 N. BROADWAY, SUITE 202
WALNUT CREEK, CA 94596
PH. (925) 217-6619
www.rsm-de.com

These drawings are instruments of service and are the property of Andrew Goodwin Designs, Inc. The information represented on these drawings are exclusively for the project indicated and shall not be transferred or otherwise reproduced without express written permission of Andrew Goodwin. Copyright 2023

SEAL

NOT FOR CONSTRUCTION

PROJECT

TRANQUILLITY HIGH SCHOOL
AQUATIC CENTER MODERNIZATION
6052 Juanche Ave,
Tranquillity, CA 93668

CLIENT

GOLDEN PLAINS UNIFIED SCHOOL DISTRICT

SHEET TITLE

COMPETITION POOL LAYOUT PLAN

PHASE DESCRIPTION
100% CD FCHD APPROVAL SWIMMING POOL

DATE: 8/26/2025
TECHNICIAN: RD
PROJECT MANAGER: BR
JOB NUMBER: 791

SHEET NUMBER
SP1.0-1

PLOT DATE: 4/24/2025 3:26:20 PM

COMPETITION POOL LAYOUT PLAN
3/16" = 1'-0"
1

Copyright © **2025** RSM, Inc.-All Rights Reserved-This document was prepared for use only by the client, only for the purposes stated, and within a reasonable time from issuance. Non-commercial, educational, and scientific use of this document by regulatory agencies is regarded as a "fair use" and not a violation of copyright. Regulatory agencies may make additional copies of this document for internal use. Copies may also be made available to the public as required by law. The reprint must acknowledge the copyright and indicate that permission to reprint has been received.

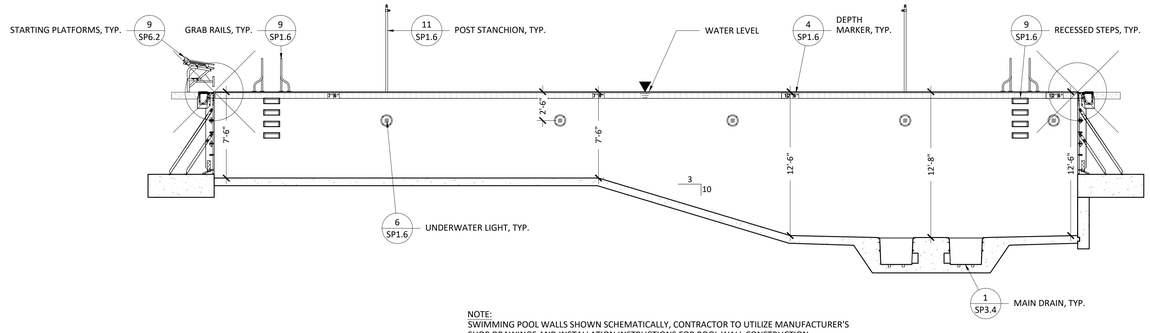

NOTE:
SWIMMING POOL WALLS SHOWN SCHEMATICALLY, CONTRACTOR TO UTILIZE MANUFACTURER'S SHOP DRAWINGS AND INSTALLATION INSTRUCTIONS FOR POOL WALL CONSTRUCTION.

COMPETITION POOL SECTION 4
3/16" = 1'-0"

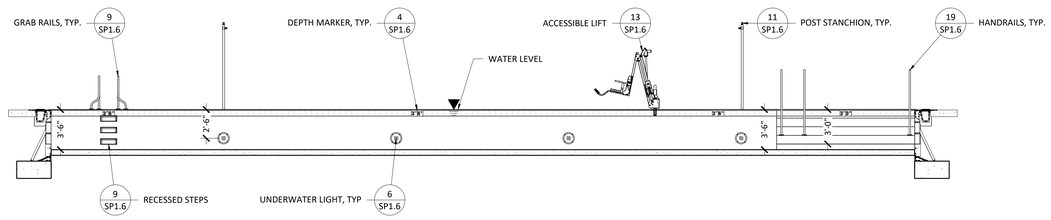

NOTE:
SWIMMING POOL WALLS SHOWN SCHEMATICALLY, CONTRACTOR TO UTILIZE MANUFACTURER'S SHOP DRAWINGS AND INSTALLATION INSTRUCTIONS FOR POOL WALL CONSTRUCTION.

COMPETITION POOL SECTION 3
3/16" = 1'-0"

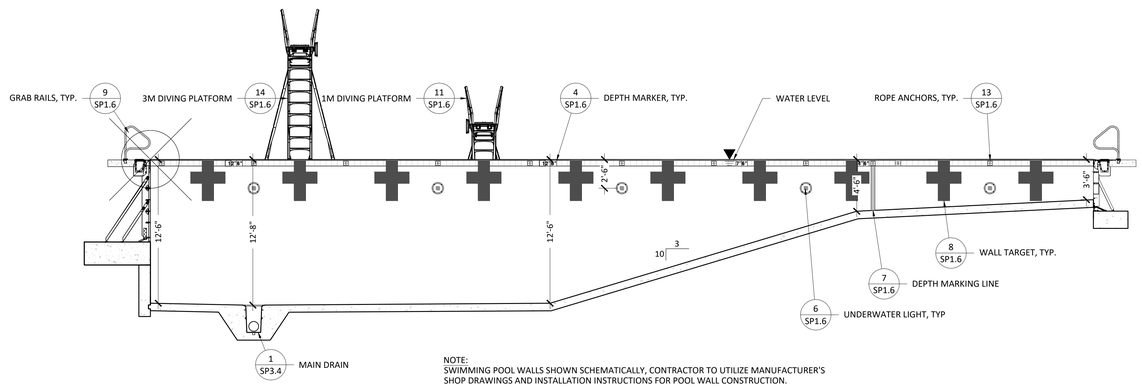

NOTE:
SWIMMING POOL WALLS SHOWN SCHEMATICALLY, CONTRACTOR TO UTILIZE MANUFACTURER'S SHOP DRAWINGS AND INSTALLATION INSTRUCTIONS FOR POOL WALL CONSTRUCTION.

COMPETITION POOL SECTION 2
3/16" = 1'-0"

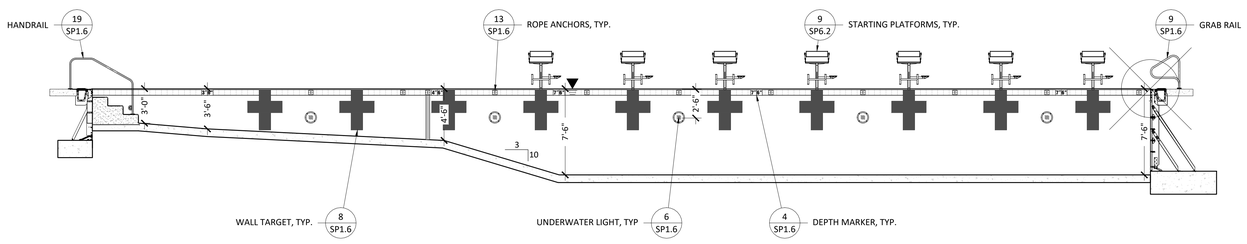

NOTE:
SWIMMING POOL WALLS SHOWN SCHEMATICALLY, CONTRACTOR TO UTILIZE MANUFACTURER'S SHOP DRAWINGS AND INSTALLATION INSTRUCTIONS FOR POOL WALL CONSTRUCTION.

COUNTY OF FRESNO ENVIRONMENTAL HEALTH DIVISION
1221 Fulton Street – 3rd Floor (559) 600-3357
APPROVED
WITH NOTED CORRECTIONS AND
SUBJECT TO FIELD INSPECTIONS
BY _____ DATE 8/26/25
APPROVAL OF THIS PLAN DOES NOT CONSTITUTE PERMISSION TO VIOLATE ANY APPLICABLE CITY OR COUNTY ORDINANCE, OR STATE LAW, AND SHALL NOT PREVENT THIS DEPARTMENT FROM REQUIRING CORRECTION OF ERRORS OR OMISSIONS IN PLANS, SPECIFICATIONS OR CONSTRUCTION

COMPETITION POOL SECTION 1
3/16" = 1'-0"

AGD
ARCHITECTURE | DESIGN

ANDREW GOODWIN DESIGNS
1238 MONTEREY STREET
SAN LUIS OBISPO, CA 93422
t: (805) 439-1611
www.andrewgoodwin.us

RSM
Design | Engineering
ROGERS STRINGER MCCLELLAND
1981 N. BROADWAY, SUITE 202
WALNUT CREEK, CA 94596
PH. (925) 217-6619
www.rsm-de.com

These drawings are instruments of service and are the property of Andrew Goodwin Designs, Inc. The information represented on these drawings are exclusively for the project indicated and shall not be transferred or otherwise reproduced without express written permission of Andrew Goodwin.
Copyright 2023

SEAL

NOT FOR CONSTRUCTION

PROJECT

TRANQUILLITY HIGH SCHOOL
AQUATIC CENTER MODERNIZATION
6052 Juanche Ave,
Tranquillity, CA 93668

CLIENT

GOLDEN PLAINS UNIFIED SCHOOL DISTRICT

SHEET TITLE

COMPETITION POOL SECTIONS

PHASE DESCRIPTION
100% CD FCHD APPROVAL SWIMMING POOL

DATE: 8/26/2025

TECHNICIAN: RD

PROJECT MANAGER: BR

JOB NUMBER: 791

SHEET NUMBER
SP1.1-1

PLOT DATE: 4/24/2025 3:26:20 PM

Copyright © **2025** RSM, Inc.-All Rights Reserved-This document was prepared for use only by the client, only for the purposes stated, and within a reasonable time from issuance. Non-commercial, educational, and scientific use of this document by regulatory agencies is regarded as a "fair use" and not a violation of copyright. Regulatory agencies may make additional copies of this document for internal use. Copies may also be made available to the public as required by law. The reprint must acknowledge the copyright and indicate that permission to reprint has been received.

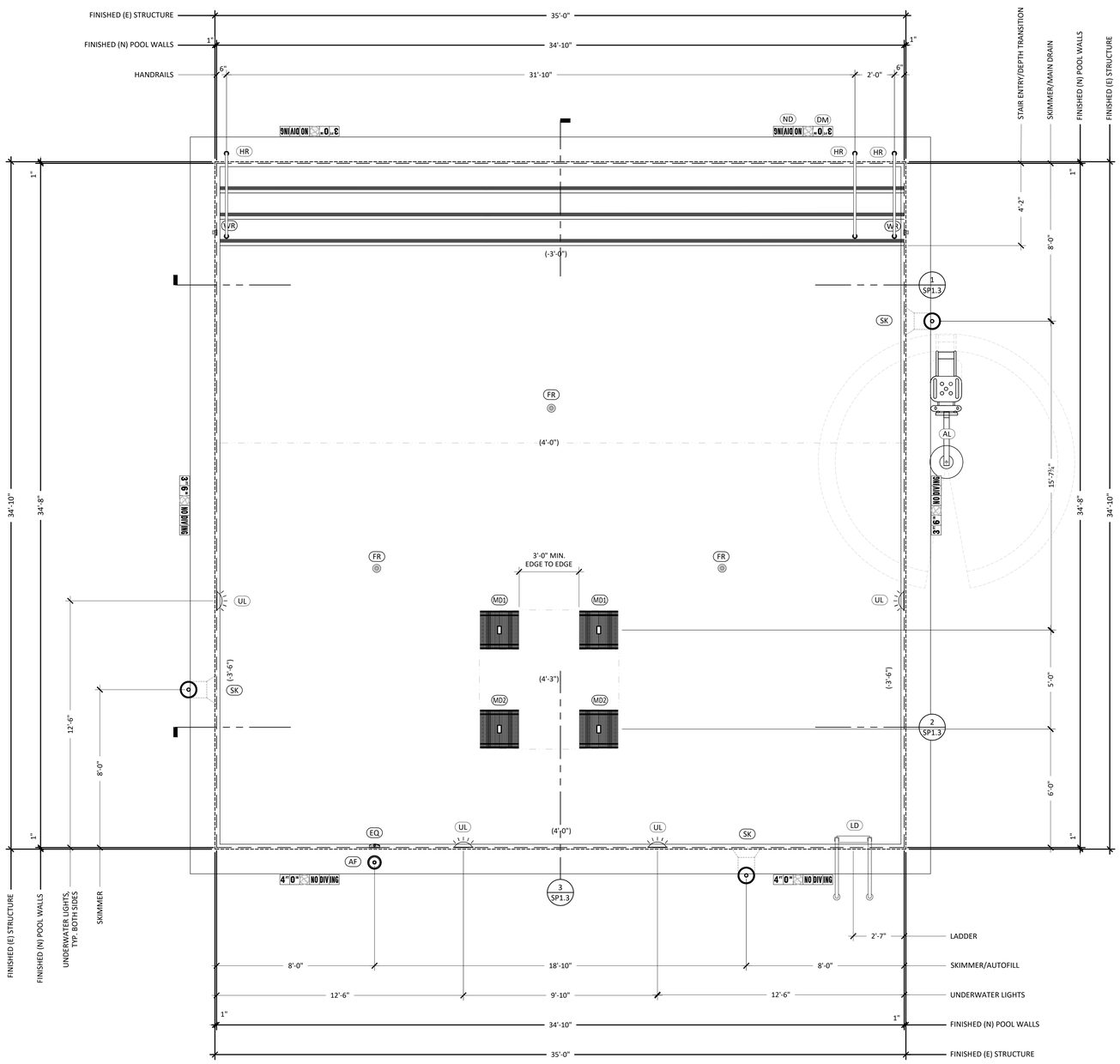

POOL LAYOUT PLAN GENERAL NOTES:

1. POOL FINISH PER FINISH SCHEDULE.
2. PLAN IS TO BE USED IN CONJUNCTION WITH THE POOL STRUCTURAL PLANS, POOL PIPING PLAN AND POOL ELECTRICAL PLANS. REFER TO THOSE DRAWINGS & DETAILS FOR INFORMATION NOT SHOWN ON THIS PLAN.
3. ALL DIMENSIONS SHALL BE VERIFIED PRIOR TO START OF WORK. ANY DISCREPANCIES SHALL BE REPORTED TO THE ENGINEER.
4. OVERALL DIMENSIONS SHOWN ARE FROM INSIDE FINISH OF WALLS & FLOORS.
5. FEATURES OR EQUIPMENT DIMENSIONS SHOWN ARE FROM CENTER TO CENTER.
6. DEPTH MARKERS AND WARNING SIGNS ARE SHOWN IN APPROXIMATE LOCATIONS. DEPTH MARKERS AND WARNING SIGNS MAY NOT EXCEED 25'-0" APART PER LOCAL CODE. NO DIVING WARNING SIGNAGE ONLY REQUIRED WHEN POOL DEPTH IS LESS THAN 6 FEET.
7. LIFEGUARD EQUIPMENT SHALL BE PROVIDED AS REQUIRED AS NOTED ON THE DRAWINGS.
8. ALL METAL COMPONENTS TO BE BONDED & GROUNDED PER C.E.C.
9. ALL APPLICABLE STATE AND LOCAL LAWS AND CODES SHALL BE FOLLOWED.

TEACHING POOL DESIGN DATA	
SIZE (LENGTH BY WIDTH):	34 FT 10 IN - 34 FT 8 IN
DEPTH PROFILE:	3 FT 0 IN - 4 FT 3 IN
SURFACE AREA:	1,213 SF
PERIMETER:	139 FT
VOLUME:	31,365 GAL
MAX BATHER LOAD:	60 BATHERS

TEACHING POOL SYSTEM DESIGN DATA	
TURNOVER RATE:	4.55 HRS
RECIRCULATION RATE:	115 GPM
FILTER AREA:	7.06 SF
FILTRATION RATE:	16.29 GPM/SF
BACKWASH FLOW RATE:	127 GPM

TEACHING POOL SUCTION OUTLET DATA	
RECIRCULATION PUMP MAX FLOW RATE @60FT:	255 GPM
MAIN DRAIN MAX APPROVED FLOW RATE:	408 GPM
SUCTION PIPE VELOCITY @ DESIGN FLOW RATE:	5.22 FPS

TEACHING POOL FINISH SCHEDULE	
POOL FINISH	BY MYRTHA, COLOR TO BE WHITE
WATER LINE TILE	6" X 6" GLAZED CERAMIC TILE BY DAL-TILE OR APPROVED EQUAL. CONTRASTING COLOR BY OWNER
STEP TRIM	MYRTHA APPLIED ACRYLIC. COLOR BY OWNER
COPING STONE	19" BULLNOSE COPING, CONTRACTOR TO CONFIRMCOPING STONE WIDTH ONSITE
POOL FLOOR	MYRTHA SOFTWALK ANTI-SLIP FLOORING, COLOR WHITE

TEACHING POOL LAYOUT EQUIPMENT SCHEDULE

CALL OUT	EQUIPMENT	MODEL/DESCRIPTION	DETAIL
DM	VERTICAL DEPTH MARKERS	6"X6" GLAZED CERAMIC TILE	3/SP1.7
DM	DECK DEPTH MARKERS	6"X6" SLIP RESISTANT CERAMIC TILE	3/SP1.7
ND	NO DIVING MARKER	6"X6" SLIP RESISTANT CERAMIC TILE	4/SP1.7
PL	POOL LADDER	STANDARD CROSSBRACE PLUS LADDER, 3 STEP, 1.90 IN OUSTSIDE DIAMETER 0.145" WALL THICKNESS TYPE 304L STAINLESS STEEL MANUFACTURED BY SPECTRUM	6/SP1.7
HR	HANDRAILS	CUSTOM 304L STAINLESS STEEL RAILS, ESCUTCHEONS AND BRONZE DECK ANCHORS BY S.R. SMITH OR APPROVED EQUAL. 1.90 IN DIAMETER 0.145" WALL THICKNESS. POOL STAIR HANDRAIL ANCHOR SUPPLIED BY MYRTHA.	2/SP1.7
AL	ADA ACCESS LIFT	SPLASH! ER BY S.R. SMITH. LIFT SHALL INCLUDE ALL REQUIRED ACCESSORIES.	10/SP1.7
UL	UNDERWATER LIGHTS	J & J ELECTRONICS UNDERWATER POOL LIGHT, 500 W EQUIVALENT, STAINLESS STEEL VINYL POOL NICHE WITH CHROME SEALING RING	7/SP1.7

TEACHING POOL RECIRCULATION EQUIPMENT SCHEDULE

CALL OUT	EQUIPMENT	MODEL/DESCRIPTION	DETAIL
MD1	RECIRCULATION MAIN DRAIN	DALDERADO 24 X 24 X 12 - 03 SUMP AND GRATE, MAXIMUM FLOW RATE 408 GPM WITH MYRTHA COLLAR	2/SP3.5
MD2	SLIDE MAIN DRAIN	DALDERADO 24 X 24 X 30 - 10 SUMP AND GRATE, MAXIMUM FLOW RATE 1734 GPM WITH MYRTHA COLLAR	1/SP3.5
SK	SKIMMER	HAYWARD WIDEMOUTH SP1085 VINYL SKIMMER WITH ALL REQUIRED GASKETS AND AND MOUNT SPACE BLOCK, NO EQUALIZER COVERS	5/SP3.5
FR	FLOOR RETURN INLET	1.5" FLOOR INLET BY MYRTHA	4/SP3.5
WR	WALL RETURN INLET	2" WALL RETURN INLET BY MYRTHA	3/SP3.5
AF	AUTOFILL	MP INDUSTRIES, INC. AUTO-LEV AUTOMATIC WATER LEVELER, 3/4" WATER SUPPLY, 1-1/2" EQUALIZER LINE, W/ DECK WELL INSTALLATION	6/SP3.5
EQ	AUTOFILL EQUALIZER COVER	AQUASTAR 6HPHAxxx 6" ROUND OUTLET COVER	7/SP3.5

ALL EQUIPMENT NOTED ARE BASIS OF DESIGN & DESIGNATE MINIMUM PERFORMANCE STANDARDS. EQUIVALENT PRODUCTS MAY BE USED PROVIDED THEY ARE SUBMITTED TO ENGINEER OF RECORD FOR APPROVAL.

COUNTY OF FRESNO ENVIRONMENTAL HEALTH DIVISION
1221 Fulton Street – 3rd Floor (559) 600-3357
APPROVED WITH NOTED CORRECTIONS AND SUBJECT TO FIELD INSPECTIONS
BY: DATE: 8/26/25
APPROVAL OF THIS PLAN DOES NOT CONSTITUTE PERMISSION TO VIOLATE ANY APPLICABLE CITY OR COUNTY ORDINANCE, OR STATE LAW, AND SHALL NOT PREVENT THE DEPARTMENT FROM REQUIRING CORRECTION OF ERRORS OR OMISSIONS IN PLANS, SPECIFICATIONS OR CONSTRUCTION.

TEACHING POOL LAYOUT PLAN
3/8" = 1'-0"
1

AGD ARCHITECTURE | DESIGN
ANDREW GOODWIN DESIGNS
1238 MONTEREY STREET
SAN LUIS OBISPO, CA 93422
t: (805) 439-1611
www.andrewgoodwin.us

RSM Design | Engineering
ROGERS STRINGER MCCLELLAND
1981 N. BROADWAY, SUITE 202
WALNUT CREEK, CA 94596
PH. (925) 217-6619
www.rsm-de.com

These drawings are instruments of service and are the property of Andrew Goodwin Designs, Inc. The information represented on these drawings are exclusively for the project indicated and shall not be transferred or otherwise reproduced without express written permission of Andrew Goodwin. Copyright 2023

SEAL

NOT FOR CONSTRUCTION

PROJECT

TRANQUILLITY HIGH SCHOOL
AQUATIC CENTER MODERNIZATION
6052 Juanche Ave,
Tranquillity, CA 93668

CLIENT

GOLDEN PLAINS UNIFIED SCHOOL DISTRICT

SHEET TITLE

TEACHING POOL LAYOUT PLAN

PHASE DESCRIPTION
100% CD FCHD APPROVAL
SWIMMING POOL

DATE: 8/26/2025
TECHNICIAN: RD
PROJECT MANAGER: BR
JOB NUMBER: 791

SHEET NUMBER
SP1.2-1

PLOT DATE: 4/24/2025 3:26:20 PM

Copyright © **2025** RSM, Inc.-All Rights Reserved-This document was prepared for use only by the client, only for the purposes stated, and within a reasonable time from issuance. Non-commercial, educational, and scientific use of this document by regulatory agencies is regarded as a "fair use" and not a violation of copyright. Regulatory agencies may make additional copies of this document for internal use. Copies may also be made available to the public as required by law. The reprint must acknowledge the copyright and indicate that permission to reprint has been received.

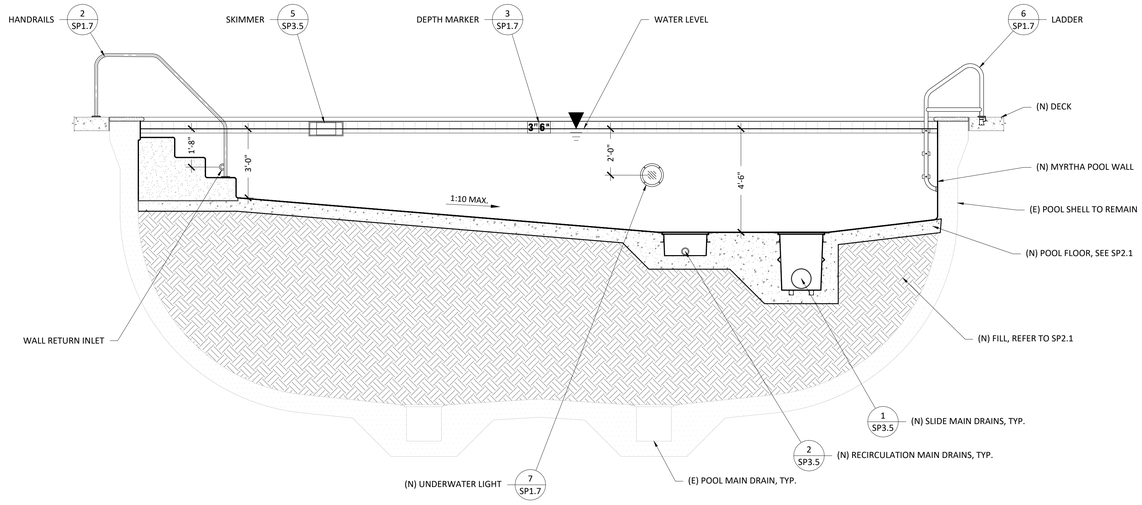

TEACHING POOL SECTION
3/8" = 1'-0"
3

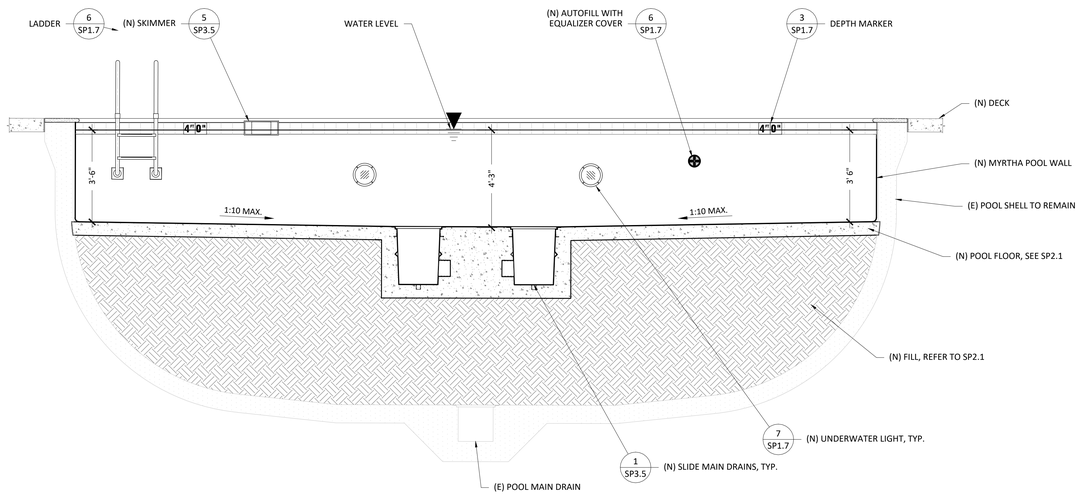

TEACHING POOL SECTION
3/8" = 1'-0"
2

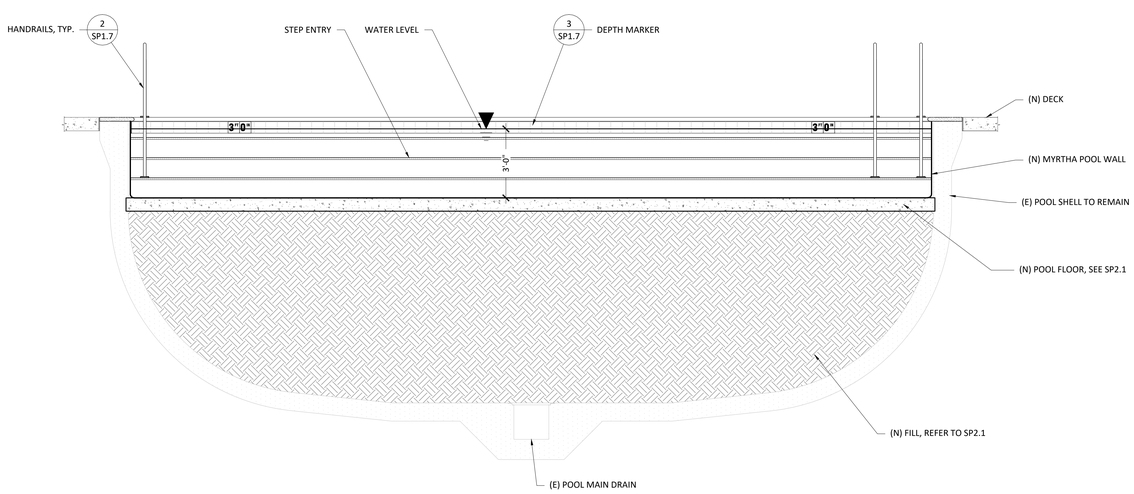

COUNTY OF FRESNO ENVIRONMENTAL HEALTH DIVISION
1221 Fulton Street - 3rd Floor (559) 600-3357
APPROVED
WITH NOTED CORRECTIONS AND
SUBJECT TO FIELD INSPECTIONS
BY: DATE: 8/26/25
APPROVAL OF THIS PLAN DOES NOT CONSTITUTE PERMISSION TO VIOLATE ANY APPLICABLE CITY OR COUNTY ORDINANCE OR STATE LAW AND SHALL NOT PREVENT THIS DEPARTMENT FROM REQUIRING CORRECTION OF ERRORS OR OMISSIONS IN PLANS, SPECIFICATIONS OR CONSTRUCTION.

TEACHING POOL SECTION
3/8" = 1'-0"
1

Copyright © 2025 RSM, Inc.-All Rights Reserved-This document was prepared for use only by the client, only for the purposes stated, and within a reasonable time from issuance. Non-commercial, educational, and scientific use of this document by regulatory agencies is regarded as a "fair use" and not a violation of copyright. Regulatory agencies may make additional copies of this document for internal use. Copies may also be made available to the public as required by law. The reprint must acknowledge the copyright and indicate that permission to reprint has been received.

AGD
ARCHITECTURE | DESIGN
ANDREW GOODWIN DESIGNS
1238 MONTEREY STREET
SAN LUIS OBISPO, CA 93422
t: (805) 439-1611
www.andrewgoodwin.us

RSM
Design | Engineering
ROGERS STRINGER MCCLELLAND
1981 N. BROADWAY, SUITE 202
WALNUT CREEK, CA 94596
PH. (925) 217-6619
www.rsm-de.com

These drawings are instruments of service and are the property of Andrew Goodwin Designs, Inc. The information represented on these drawings are exclusively for the project indicated and shall not be transferred or otherwise reproduced without express written permission of Andrew Goodwin. Copyright 2023

SEAL

NOT FOR CONSTRUCTION

PROJECT

TRANQUILLITY HIGH SCHOOL
AQUATIC CENTER MODERNIZATION
6052 Juanche Ave,
Tranquillity, CA 93668

CLIENT

GOLDEN PLAINS UNIFIED SCHOOL DISTRICT

SHEET TITLE

TEACHING POOL SECTIONS

PHASE DESCRIPTION
100% CD FCHD APPROVAL SWIMMING POOL

DATE: 8/26/2025
TECHNICIAN: RD
PROJECT MANAGER: BR
JOB NUMBER: 791

SHEET NUMBER
SP1.3-1

PLOT DATE: 4/24/2025 3:26:20 PM

SPLASH PAD PLAN GENERAL NOTES:

1. SPLASH PAD FINISH PER FINISH SCHEDULE.
2. PLAN IS TO BE USED IN CONJUNCTION WITH THE SPLASH PAD PIPING PLAN (**SP3.3-1**). TO THOSE PLANS FOR UN-CLEAR PORTIONS OR INFORMATION NOT SHOWN.
3. ALL DIMENSIONS SHALL BE VERIFIED PRIOR TO START OF WORK. ANY DISCREPANCIES SHALL BE REPORTED TO THE ENGINEER.
4. OVERALL DIMENSIONS SHOWN ARE FROM THE OUTSIDE FINISH OF WALLS & FLOORS.
5. FEATURES OR EQUIPMENT DIMENSIONS SHOWN ARE FROM CENTER TO CENTER.
6. DEPTH MARKERS AND WARNING SIGNS ARE SHOWN IN APPROXIMATE LOCATIONS. DEPTH MARKERS AND WARNING SIGNS MAY NOT EXCEED 25'-0" APART PER LOCAL CODE.
7. ALL METAL COMPONENTS TO BE BONDED & GROUNDED PER N.E.C.

SPLASH PAD FEATURE SCHEDULE

CALL OUT	SPRAYTOY	QUANTITY	GPM
1	TIPPY BUCKET - 3-WAY_TRE-TB3	1	30 GPM
2	DIRECTIONAL JET-POP_FM-DJ	3	5 GPM (EACH)
3	PEDESTAL BLASTER_GND-PBT	2	20 GPM (EACH)
4	WATER DOME_BOL-WD	1	40 GPM
5	RADIAL JET BOLLARD_BOL-RJ	1	3O GPM
6	GUSHER DECK JET_FM-GJ	3	20 GPM (EACH)
7	BLADE SPRAY DOWN JETS_GND-BSD	1	20 GPM
	TOTAL	12	235 GPM

SPLASHPAD RECIRCULATION EQUIPMENT SCHEDULE

CALL OUT	EQUIPMENT	MODEL/DESCRIPTION	DETAIL
MD	MAIN DRAIN	RAINDECK 11"X11" BOX DRAIN - 4" PVC CONNECTION RD437	1/SP3.6

SPLASHPAD DESIGN DATA

SPLASHPAD FEATURE FLOWRATE:	235 GPM
SURGE TANK VOLUME:	4,443 GAL
SURGE TANK TURNOVER RATE:	0.50 HRS
SURGE TANK RECIRCULATION RATE:	150 GPM
FILTER AREA:	4.91 SF
FILTRATION RATE:	15.27 GPM/SF
BACKWASH FLOW RATE:	100 GPM

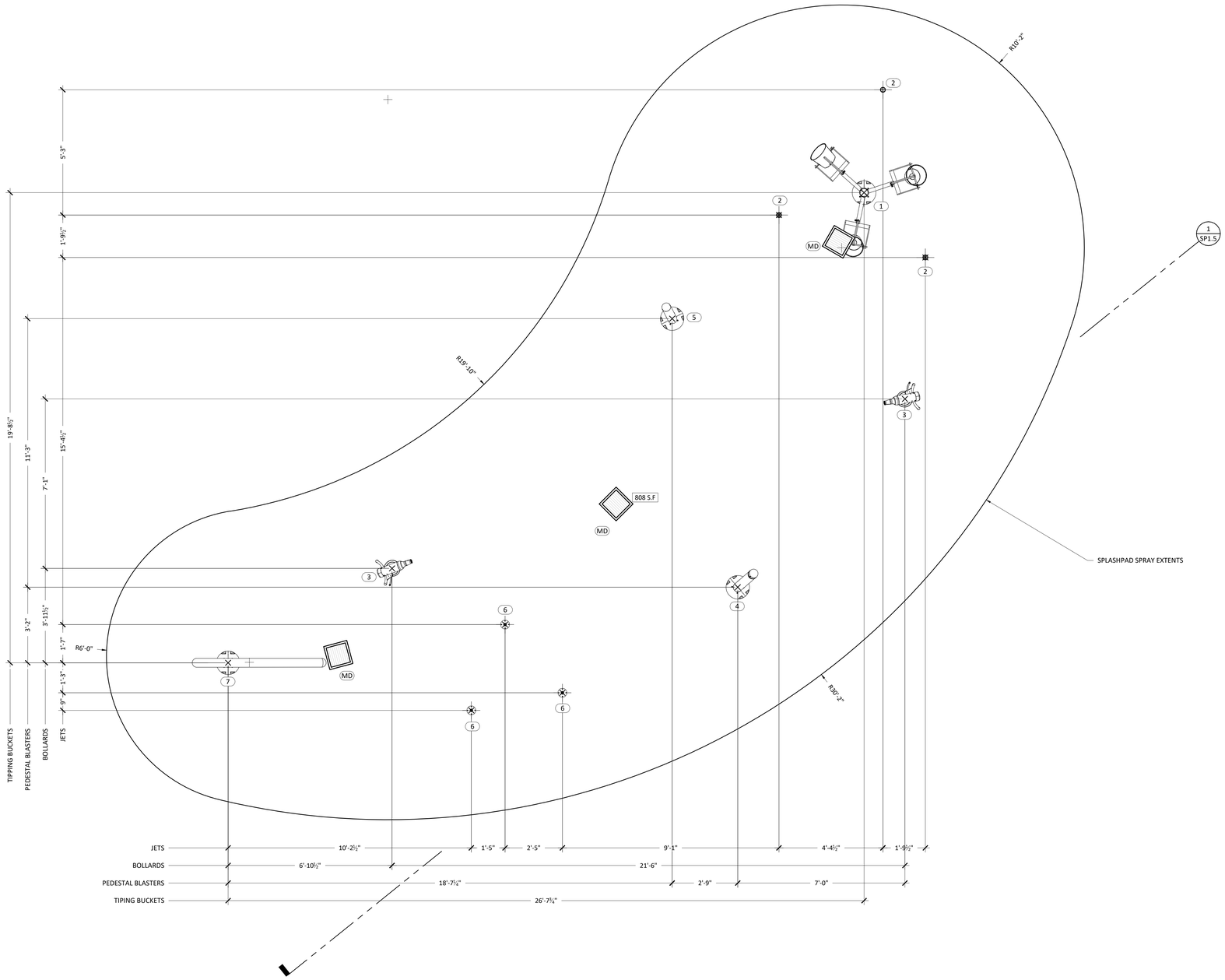

COUNTY OF FRESNO ENVIRONMENTAL HEALTH DIVISION
1221 Fulton Street - 3rd Floor (559) 600-3357
APPROVED
WITH NOTED CORRECTIONS AND
SUBJECT TO FIELD INSPECTIONS
BY: _____ DATE: 8/26/25
APPROVAL THEREOF DOES NOT CONSTITUTE PERMISSION TO VIOLATE ANY APPLICABLE CITY OR COUNTY ORDINANCE OR STATE LAW AND SHALL NOT PREVENT THIS DEPARTMENT FROM REQUIRING CORRECTION OF ERRORS OR OMISSIONS IN PLANS, SPECIFICATIONS OR CONSTRUCTION.

SPLASH PAD LAYOUT PLAN
1/2" = 1'-0"
1

AGD
ARCHITECTURE | DESIGN

ANDREW GOODWIN DESIGNS
1238 MONTEREY STREET
SAN LUIS OBISPO, CA 93422
t: (805) 439-1611
www.andrewgoodwin.us

RSM
Design | Engineering
ROGERS STRINGER MCCLELLAND
1981 N. BROADWAY, SUITE 202
WALNUT CREEK, CA 94596
PH. (925) 217-6619
www.rsm-de.com

These drawings are instruments of service and are the property of Andrew Goodwin Designs, Inc. The information represented on these drawings are exclusively for the project indicated and shall not be transferred or otherwise reproduced without express written permission of Andrew Goodwin. Copyright 2023

SEAL

NOT FOR CONSTRUCTION

PROJECT

TRANQUILLITY HIGH SCHOOL
AQUATIC CENTER MODERNIZATION
6052 Juanche Ave,
Tranquillity, CA 93668

CLIENT

GOLDEN PLAINS UNIFIED SCHOOL DISTRICT

SHEET TITLE

SPLASH PAD LAYOUT PLAN

PHASE DESCRIPTION
100% CD FCHD APPROVAL SWIMMING POOL

DATE: 8/26/2025
TECHNICIAN: RD
PROJECT MANAGER: BR
JOB NUMBER: 791

SHEET NUMBER
SP1.4-1

PLOT DATE: 4/24/2025 3:26:20 PM

Copyright © **2025** RSM, Inc.-All Rights Reserved-This document was prepared for use only by the client, only for the purposes stated, and within a reasonable time from issuance. Non-commercial, educational, and scientific use of this document by regulatory agencies is regarded as a "fair use" and not a violation of copyright. Regulatory agencies may make additional copies of this document for internal use. Copies may also be made available to the public as required by law. The reprint must acknowledge the copyright and indicate that permission to reprint has been received.

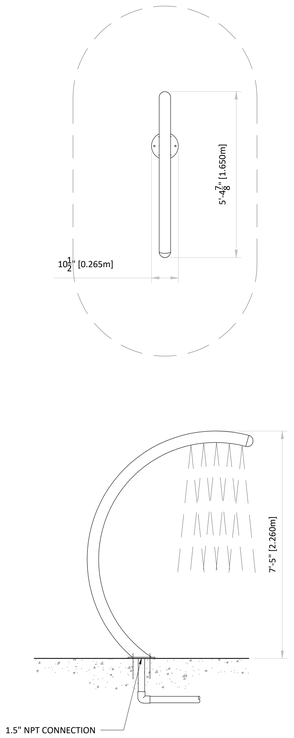

BLADE SPRAY DOWN 8
1/2" = 1'-0"

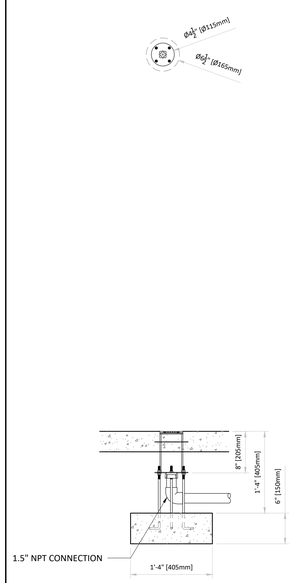

GUSHER DECK JET 7
1" = 1'-0"

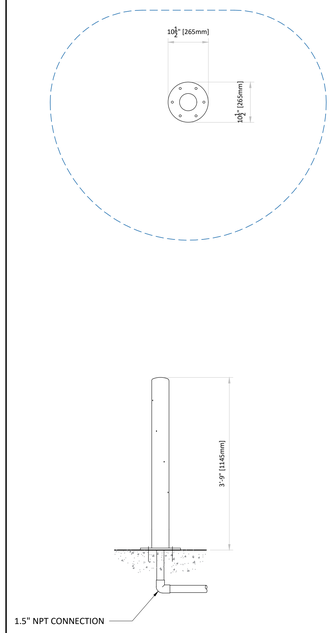

RADIAL JET BOLLARD 6
3/4" = 1'-0"

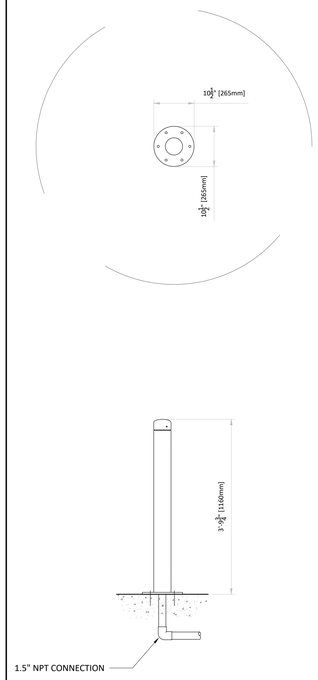

WATER DOME 5
3/4" = 1'-0"

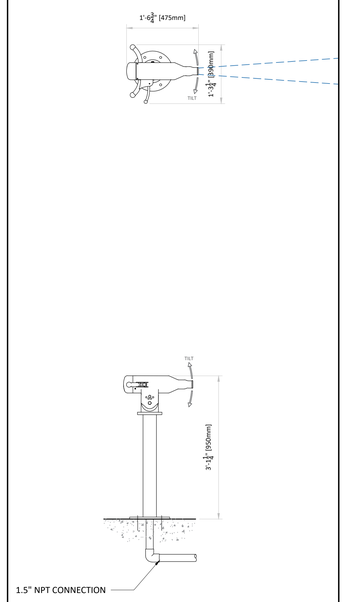

PEDESTAL BLASTER 4
3/4" = 1'-0"

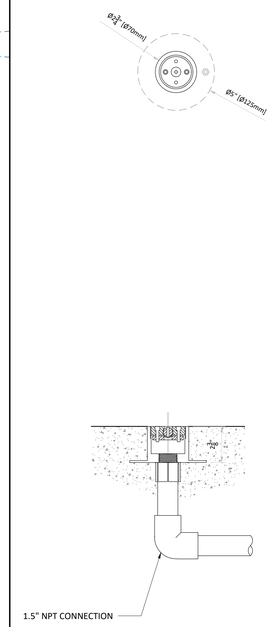

DIRECTION POP JET 3
3" = 1'-0"

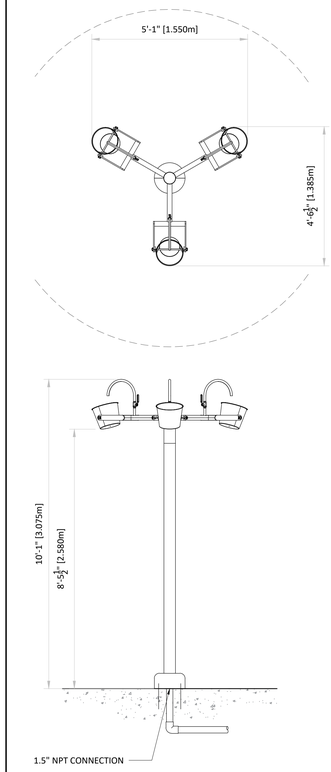

TIPPY BUCKET 2
1/2" = 1'-0"

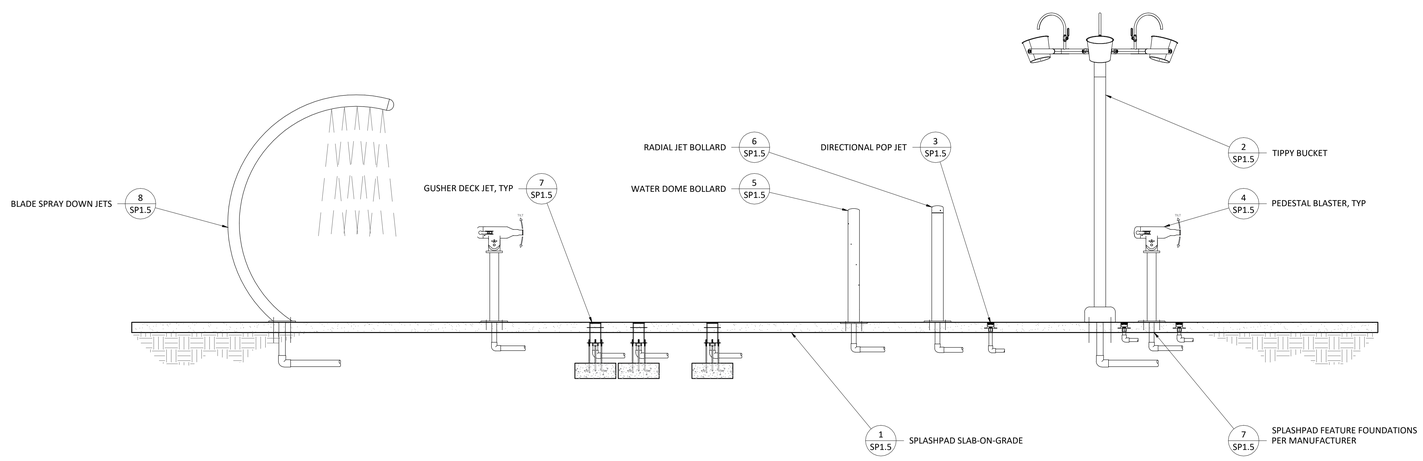

COUNTY OF FRESNO ENVIRONMENTAL HEALTH DIVISION
1221 Fulton Street – 3rd Floor (559) 600-3357
APPROVED
WITH NOTED CORRECTIONS AND
SUBJECT TO FIELD INSPECTIONS
BY _____ DATE 8/26/25
APPROVAL OF THIS PLAN DOES NOT CONSTITUTE PERMISSION TO VIOLATE ANY APPLICABLE CITY OR COUNTY ORDINANCE, OR STATE LAW, AND SHALL NOT PREVENT THIS DEPARTMENT FROM REQUIRING CORRECTION OF ERRORS OR OMISSIONS IN PLANS, SPECIFICATIONS OR CONSTRUCTION.

SPLASH PAD SECTION 1
1/2" = 1'-0"

AGD
ARCHITECTURE | DESIGN

ANDREW GOODWIN DESIGNS
1238 MONTEREY STREET
SAN LUIS OBISPO, CA 93422
t: (805) 439-1611
www.andrewgoodwin.us

RSM
Design | Engineering
ROGERS STRINGER MCCLELLAND
1981 N. BROADWAY, SUITE 202
WALNUT CREEK, CA 94596
PH. (925) 217-6619
www.rsm-de.com

These drawings are instruments of service and are the property of Andrew Goodwin Designs, Inc. The information represented on these drawings are exclusively for the project indicated and shall not be transferred or otherwise reproduced without express written permission of Andrew Goodwin.
Copyright 2023

SEAL

NOT FOR CONSTRUCTION

PROJECT

TRANQUILLITY HIGH SCHOOL
AQUATIC CENTER MODERNIZATION
6052 Juanche Ave,
Tranquillity, CA 93668

CLIENT

GOLDEN PLAINS UNIFIED SCHOOL DISTRICT

SHEET TITLE

SPLASH PAD SECTION

PHASE DESCRIPTION
100% CD FCHD APPROVAL
SWIMMING POOL

DATE: 8/26/2025
TECHNICIAN: RD
PROJECT MANAGER: BR
JOB NUMBER: 791

SHEET NUMBER
SP1.5-1

PLOT DATE: 4/24/2025 3:26:20 PM

Copyright © **2025** RSM, Inc.-All Rights Reserved-This document was prepared for use only by the client, only for the purposes stated, and within a reasonable time from issuance. Non-commercial, educational, and scientific use of this document by regulatory agencies is regarded as a "fair use" and not a violation of copyright. Regulatory agencies may make additional copies of this document for internal use. Copies may also be made available to the public as required by law. The reprint must acknowledge the copyright and indicate that permission to reprint has been received.

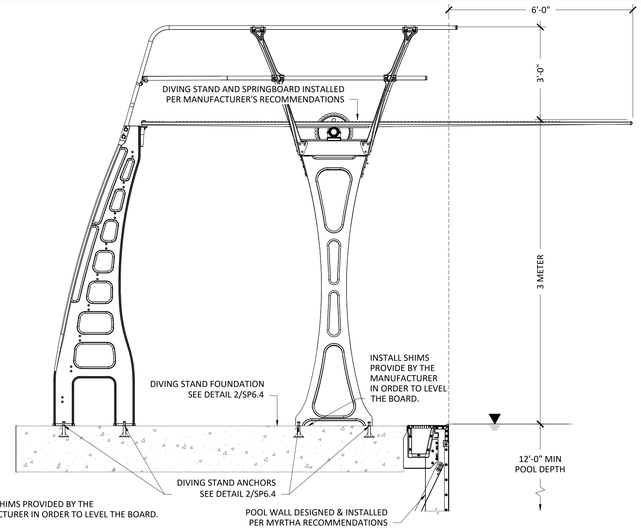

NOTE:
INSTALL SHIMS PROVIDED BY THE MANUFACTURER IN ORDER TO LEVEL THE BOARD.

CONTRACTOR TO OBTAIN MANUFACTURER'S ANCHOR INSTALLATION TEMPLATE TO ASSURE ACCURATE LOCATION OF ALL ANCHORS

3-METER DIVING STAND (14)
1/2" = 1'-0"

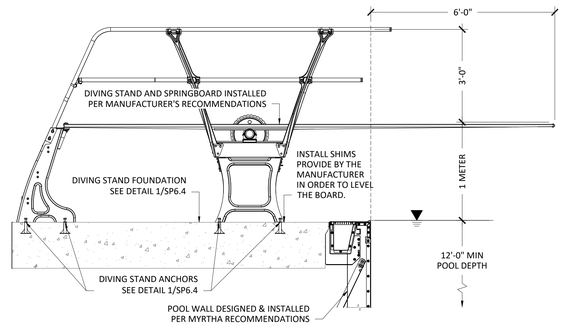

CONTRACTOR TO OBTAIN MANUFACTURER'S ANCHOR INSTALLATION TEMPLATE TO ASSURE ACCURATE LOCATION OF ALL ANCHORS

NOTE:
INSTALL SHIMS PROVIDED BY THE MANUFACTURER IN ORDER TO LEVEL THE BOARD.

NOTE: BOND & GROUND PER CEC

1-METER DIVING STAND (12)
1/2" = 1'-0"

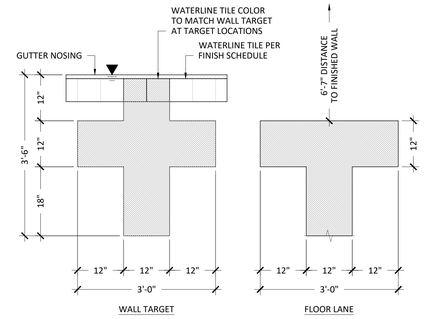

NOTE:
ALL LANE MARKERS & WALL TARGETS TO BE PAINTED PER MYRTHA RECOMMENDATIONS AND BE SLIP RESISTANT. COLOR SELECTION PER FINISH SCHEDULE.

LANE MARKERS & WALL TARGETS (8)
3/4" = 1'-0"

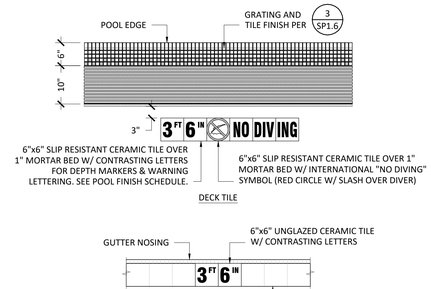

DETAIL NOTES:
1. "NO DIVING" SYMBOL/LETTERING ONLY REQUIRED FOR DEPTHS 6'-0" OR LESS.
2. ALL GUTTER & WATERLINE TILE TO BE INSTALLED PER MYRTHA RECOMMENDATIONS.

DEPTH MARKER LOCATIONS (4)
3/4" = 1'-0"

ACCESSIBLE LIFT NOTES:
1. SEAT SHALL HAVE 300 LBS MIN. LIVE LOAD CAPACITY.
2. SEAT SHALL HAVE AN OCCUPANT RESTRAINT.
3. SEAT SHALL LOWER OPERATOR 18" MIN. BELOW SURFACE OF WATER.
4. MAXIMUM TURNING RADIUS IS 48" WHEN RAISED.
5. GUSSET COVER PLATE TO BE ATTACHED REQUIRING TOOL FOR REMOVAL.
6. FOOTRESTS SHALL BE PROVIDED AND SHALL MOVE WITH THE SEAT.
7. LIFT SHALL HAVE TWO ARMRESTS. THE ARMREST POSITIONED OPPOSITE THE WATER SHALL BE REMOVABLE OR SHALL FOLD CLEAR OF THE SEAT WHEN THE SEAT IS IN THE RAISED POSITION.
8. THE LIFT SHALL BE CAPABLE OF UNASSISTED OPERATION FROM THE DECK AND WATER LEVEL. CONTROLS AND OPERATING MECHANISMS SHALL BE OPERABLE WITH ONE HAND AND SHALL BE UNOBSTRUCTED WHEN THE LIFT IS IN USE.
9. LIFT MUST BE STABLE AND NOT PERMIT UNINTENDED MOVEMENT WHEN A PERSON IS GETTING INTO OR OUT OF THE SEAT.
10. SEE STRUCTURAL SHEET SP2.1 FOR ACCESSIBLE LIFT FOUNDATION REQUIREMENTS.
11. SEAT RESTRAINT SHALL COMPLY WITH OPERABLE PARTS 11B-1009.2.4
12. BACK SUPPORT SHALL BE AT LEAST 12" HIGH 11B-1009.2.3
13. HEIGHT OF SEAT ON DECK SHALL BE BETWEEN 17"-19" 11B-1009.2.4
14. SEAT SHALL BE MIN. 16" WIDE 11B-1009.2.5

ACCESSIBLE LIFT/SEAT TO COMPLY WITH THE FOLLOWING CODES & SECTIONS:

2022 CALIFORNIA BUILDING CODE
SECTION 11B-309
SECTION 11B-205
SECTION 11B-1009.2

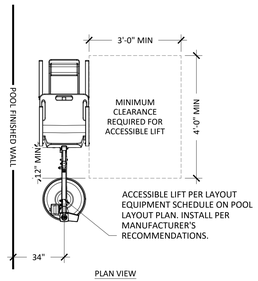

PLAN VIEW

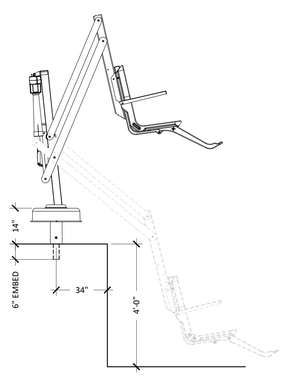

SIDE VIEW

NOTE: BOND & GROUND PER NEC

POOL ADA LIFT (13)
1/2" = 1'-0"

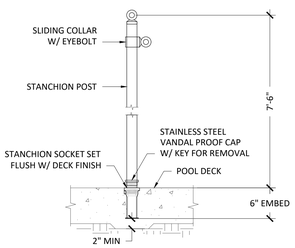

NOTE: BOND & GROUND PER CEC

STANCHION POST & ANCHOR (11)
1" = 1'-0"

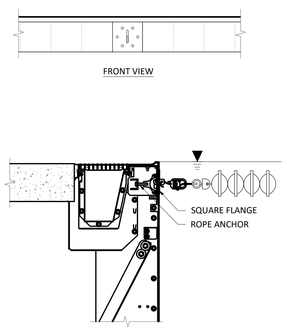

NOTE: BOND & GROUND PER CEC

ROPE ANCHOR (10)
1" = 1'-0"

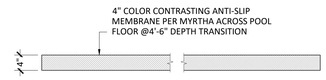

4'-6" DEPTH TRANSITION FLOOR MARKER (7)
3/4" = 1'-0"

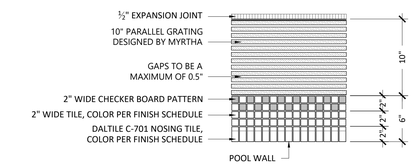

NOTE: ALL TILE TO BE 1"x1" UNGLAZED SLIP RESISTANT TILE INSTALLED PER MYRTHA RECOMMENDATIONS

DECK LEVEL GUTTER TILE FINISH (3)
1 1/2" = 1'-0"

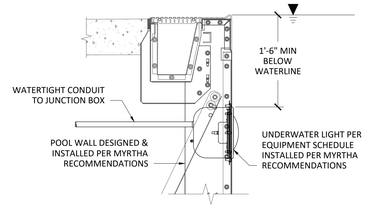

NOTE: BOND & GROUND PER CEC

UNDERWATER LIGHT (6)
1" =1'-0"

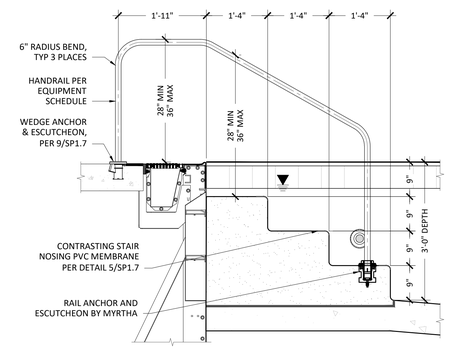

NOTE: BOND & GROUND PER CEC

ENTRY STAIRS (2)
3/4" = 1'-0"

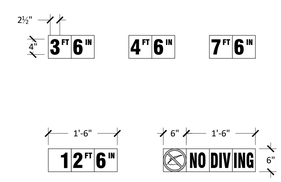

INTERNATIONAL "NO DIVING" SYMBOL (RED CIRCLE W/ SLASH OVER DIVER)

NOTE:
1. ALL WATERLINE TILE TO BE 6"x6" GLAZED CERAMIC TILE INSTALLED PER MYRTHA RECOMMENDATIONS.
2. ALL DECK TILE TO BE 6"x6" SLIP RESISTANT CERAMIC TILE.
3. LETTERING & NUMBERS TO BE MADE UP OF CONTRASTING TILE COLORS, SEE POOL FINISH SCHEDULE.
4. "NO DIVING" SYMBOL & LETTERING ONLY REQUIRED FOR DEPTHS 6'-0" OR LESS.

DEPTH MARKER TILE (5)
3/4" = 1'-0"

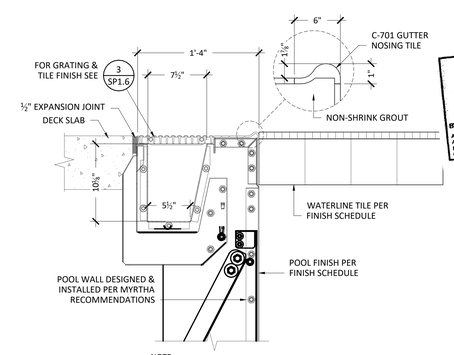

NOTE:
GUTTER TO BE DESIGNED BY MYRTHA, DIMENSIONS ARE APPROXIMATE.

DECK LEVEL GUTTER (1)
1 1/2" = 1'-0"

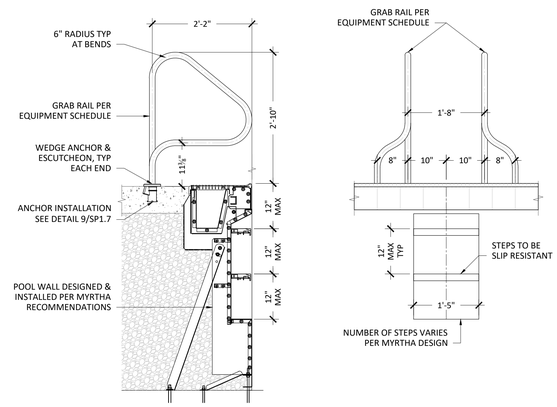

NOTE: BOND & GROUND PER CEC

RECESSED ENTRY STEPS (9)
3/4" = 1'-0"

AGD
ARCHITECTURE | DESIGN

ANDREW GOODWIN DESIGNS
1238 MONTEREY STREET
SAN LUIS OBISPO, CA 93422
t: (805) 439-1611
www.andrewgoodwin.us

RSM
Design | Engineering
ROGERS STRINGER MCCLELLAND
1981 N. BROADWAY, SUITE 202
WALNUT CREEK, CA 94596
PH. (925) 217-6619
www.rsm-de.com

These drawings are instruments of service and are the property of Andrew Goodwin Designs, Inc. The information represented on these drawings are exclusively for the project indicated and shall not be transferred or otherwise reproduced without express written permission of Andrew Goodwin. Copyright 2023

SEAL

NOT FOR CONSTRUCTION

PROJECT

TRANQUILLITY HIGH SCHOOL
AQUATIC CENTER MODERNIZATION
6052 Juanche Ave,
Tranquillity, CA 93668

CLIENT

GOLDEN PLAINS UNIFIED SCHOOL DISTRICT

COUNTY OF FRESNO ENVIRONMENTAL HEALTH DIVISION
1221 Fulton Street – 3rd Floor (559) 600-3357
APPROVED WITH NOTED CORRECTIONS AND SUBJECT TO FIELD INSPECTIONS
BY: DATE: 8/26/25
APPROVAL OF THIS PLAN DOES NOT CONSTITUTE PERMISSION TO VIOLATE ANY APPLICABLE CITY OR COUNTY ORDINANCE, OR STATE LAW, AND SHALL NOT RELIEVE THIS DEPARTMENT FROM REQUIRING CORRECTION OF ERRORS OR OMISSIONS IN PLANS, SPECIFICATIONS OR CONSTRUCTION.

SHEET TITLE

COMPETITION POOL FINISH DETAILS

PHASE DESCRIPTION
100% CD FCHD APPROVAL SWIMMING POOL

DATE: 8/26/2025
TECHNICIAN: RD
PROJECT MANAGER: BR
JOB NUMBER: 791

SHEET NUMBER
SP1.6-1

PLOT DATE: 4/24/2025 3:26:20 PM

Copyright © 2025 RSM, Inc.-All Rights Reserved-This document was prepared for use only by the client, only for the purposes stated, and within a reasonable time from issuance. Non-commercial, educational, and scientific use of this document by regulatory agencies is regarded as a "fair use" and not a violation of copyright. Regulatory agencies may make additional copies of this document for internal use. Copies may also be made available to the public as required by law. The reprint must acknowledge the copyright and indicate that permission to reprint has been received.

ACCESSIBLE LIFT NOTES:

1. SEAT SHALL HAVE 300 LBS MIN. LIVE LOAD CAPACITY.
2. SEAT SHALL HAVE AN OCCUPANT RESTRAINT.
3. SEAT SHALL LOWER OPERATOR 18" MIN. BELOW SURFACE OF WATER.
4. MAXIMUM TURNING RADIUS IS 48" WHEN RAISED.
5. GUSSET COVER PLATE TO BE ATTACHED REQUIRING TOOL FOR REMOVAL.
6. FOOTRESTS SHALL BE PROVIDED AND SHALL MOVE WITH THE SEAT.
7. LIFT SHALL HAVE TWO ARMRESTS. THE ARMREST POSITIONED OPPOSITE THE WATER SHALL BE REMOVABLE OR SHALL FOLD CLEAR OF THE SEAT WHEN THE SEAT IS IN THE RAISED POSITION.
8. THE LIFT SHALL BE CAPABLE OF UNASSISTED OPERATION FROM THE DECK AND WATER LEVEL. CONTROLS AND OPERATING MECHANISMS SHALL BE OPERABLE WITH ONE HAND AND SHALL BE UNOBSTRUCTED WHEN THE LIFT IS IN USE.
9. LIFT MUST BE STABLE AND NOT PERMIT UNINTENDED MOVEMENT WHEN A PERSON IS GETTING INTO OR OUT OF THE SEAT.
10. SEE STRUCTURAL SHEET SP2.1 FOR ACCESSIBLE LIFT FOUNDATION REQUIREMENTS.
11. SEAT RESTRAINT SHALL COMPLY WITH OPERABLE PARTS 11B-1009.2.4
12. BACK SUPPORT SHALL BE AT LEAST 12" HIGH 11B-1009.2.3
13. HEIGHT OF SEAT ON DECK SHALL BE BETWEEN 17"-19" 11B-1009.2.4
14. SEAT SHALL BE MIN. 16" WIDE 11B-1009.2.5

ACCESSIBLE LIFT/SEAT TO COMPLY WITH THE FOLLOWING CODES & SECTIONS:

2022 CALIFORNIA BUILDING CODE
SECTION 11B-309
SECTION 11B-205
SECTION 11B-1009.2

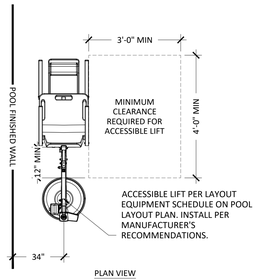

PLAN VIEW

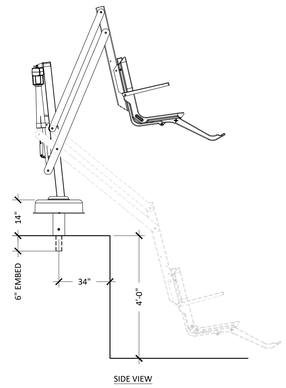

SIDE VIEW

NOTE: BOND & GROUND PER NEC

POOL ADA LIFT 10
1/2" = 1'-0"

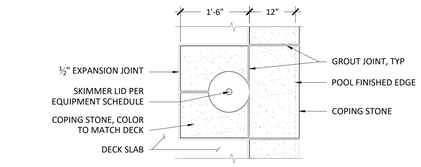

PLAN

SKIMMER COPING 8
3/4" = 1'-0"

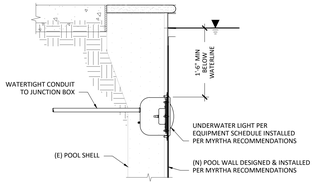

NOTE: BOND & GROUND PER CEC

UNDERWATER LIGHT 7
3/4" = 1'-0"

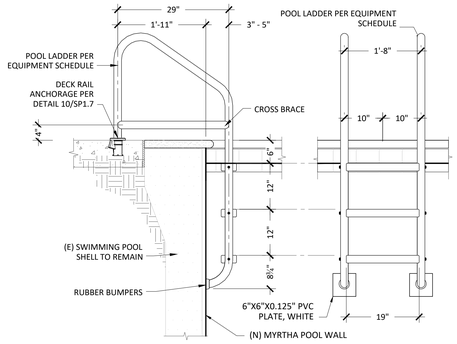

NOTE:
1. GROUNDING & BONDING TO BE PER CEC.
2. POOL LADDER SHALL COMPLY WITH CBC 3111B.4, 3111B.5

TEACHING POOL GRAB RAIL LADDER 6
3/4" = 1'-0"

NOTE: BOND & GROUND PER NEC

DECK WEDGE ANCHOR 9
3" = 1'-0"

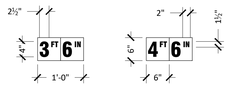

INTERNATIONAL "NO DIVING" SYMBOL
(RED CIRCLE W/ SLASH OVER DIVER)

NOTE:
1. ALL WATERLINE TILE TO BE 6"x6" GLAZED CERAMIC TILE INSTALLED PER MYRTHA RECOMMENDATIONS.
2. ALL DECK TILE TO BE 6"x6" SLIP RESISTANT CERAMIC TILE OVER 1" MIN MORTAR BED.
3. LETTERING & NUMBERS TO BE MADE UP OF CONTRASTING TILE COLORS, SEE POOL FINISH SCHEDULE.
4. "NO DIVING" SYMBOL & LETTERING ONLY REQUIRED FOR DEPTHS 6'-0" OR LESS.

DEPTH MARKER TILE 4
3/4" = 1'-0"

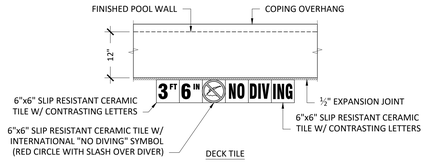

DECK TILE

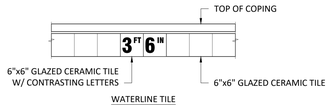

WATERLINE TILE

NOTE:
1. ALL WATER TILE TO BE GLAZED CERAMIC TILE.
2. ALL DECK TILE TO BE SLIP RESISTANT CERAMIC TILE.

DEPTH MARKER LOCATIONS 3
3/4" = 1'-0"

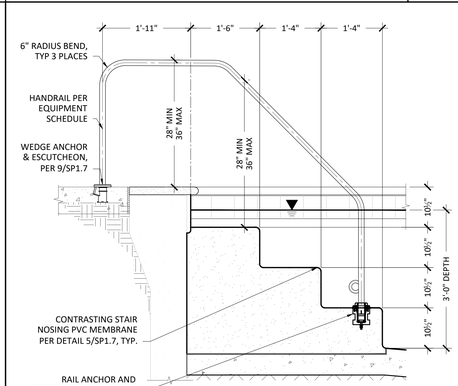

NOTE: BOND & GROUND PER CEC

ENTRY STAIRS 2
3/4" = 1'-0"

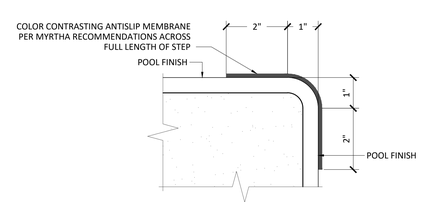

CONTRASTING NOSING STEPS 5
6" = 1'-0"

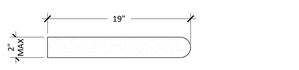

ENLARGED COPING DETAIL

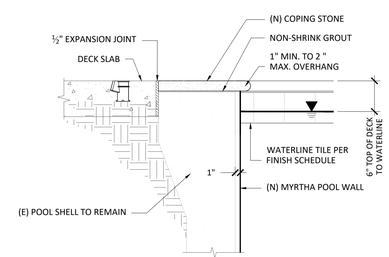

NOTE:
CONTRACTOR TO CONFIRM BOND BEAM DIMENSIONS AND FINAL COPING STONE DIMENSION.

BOND BEAM & COPING 1
1" = 1'-0"

AGD
ARCHITECTURE | DESIGN

ANDREW GOODWIN DESIGNS
1238 MONTEREY STREET
SAN LUIS OBISPO, CA 93422
t: (805) 439-1611
www.andrewgoodwin.us

RSM
Design | Engineering
ROGERS STRINGER MCCLELLAND
1981 N. BROADWAY, SUITE 202
WALNUT CREEK, CA 94596
PH. (925) 217-6619
www.rsm-de.com

These drawings are instruments of service and are the property of Andrew Goodwin Designs, Inc. The information represented on these drawings are exclusively for the project indicated and shall not be transferred or otherwise reproduced without express written permission of Andrew Goodwin.
Copyright 2023

SEAL

NOT FOR CONSTRUCTION

PROJECT

TRANQUILLITY HIGH SCHOOL
AQUATIC CENTER MODERNIZATION
6052 Juanche Ave,
Tranquillity, CA 93668

CLIENT

GOLDEN PLAINS UNIFIED SCHOOL DISTRICT

COUNTY OF FRESNO ENVIRONMENTAL HEALTH DIVISION
1221 Fulton Street - 3rd Floor (559) 600-3357
APPROVED WITH NOTED CORRECTIONS AND SUBJECT TO FIELD INSPECTIONS
BY: DATE: 8/26/25
APPROVAL OF THIS PLAN DOES NOT CONSTITUTE PERMISSION TO VIOLATE ANY APPLICABLE CITY OR COUNTY ORDINANCE, OR STATE LAW, AND DOES NOT PREVENT THIS DEPARTMENT FROM REQUIRING CORRECTION OF ERRORS OR OMISSIONS IN PLANS, SPECIFICATIONS OR CONSTRUCTION.

SHEET TITLE

TEACHING POOL FINISH DETAILS

PHASE DESCRIPTION
100% CD FCHD APPROVAL SWIMMING POOL

DATE: 8/26/2025
TECHNICIAN: RD
PROJECT MANAGER: BR
JOB NUMBER: 791

SHEET NUMBER
SP1.7-1

PLOT DATE: 4/24/2025 3:26:20 PM

Copyright © 2025 RSM, Inc.-All Rights Reserved-This document was prepared for use only by the client, only for the purposes stated, and within a reasonable time from issuance. Non-commercial, educational, and scientific use of this document by regulatory agencies is regarded as a "fair use" and not a violation of copyright. Regulatory agencies may make additional copies of this document for internal use. Copies may also be made available to the public as required by law. The reprint must acknowledge the copyright and indicate that permission to reprint has been received.

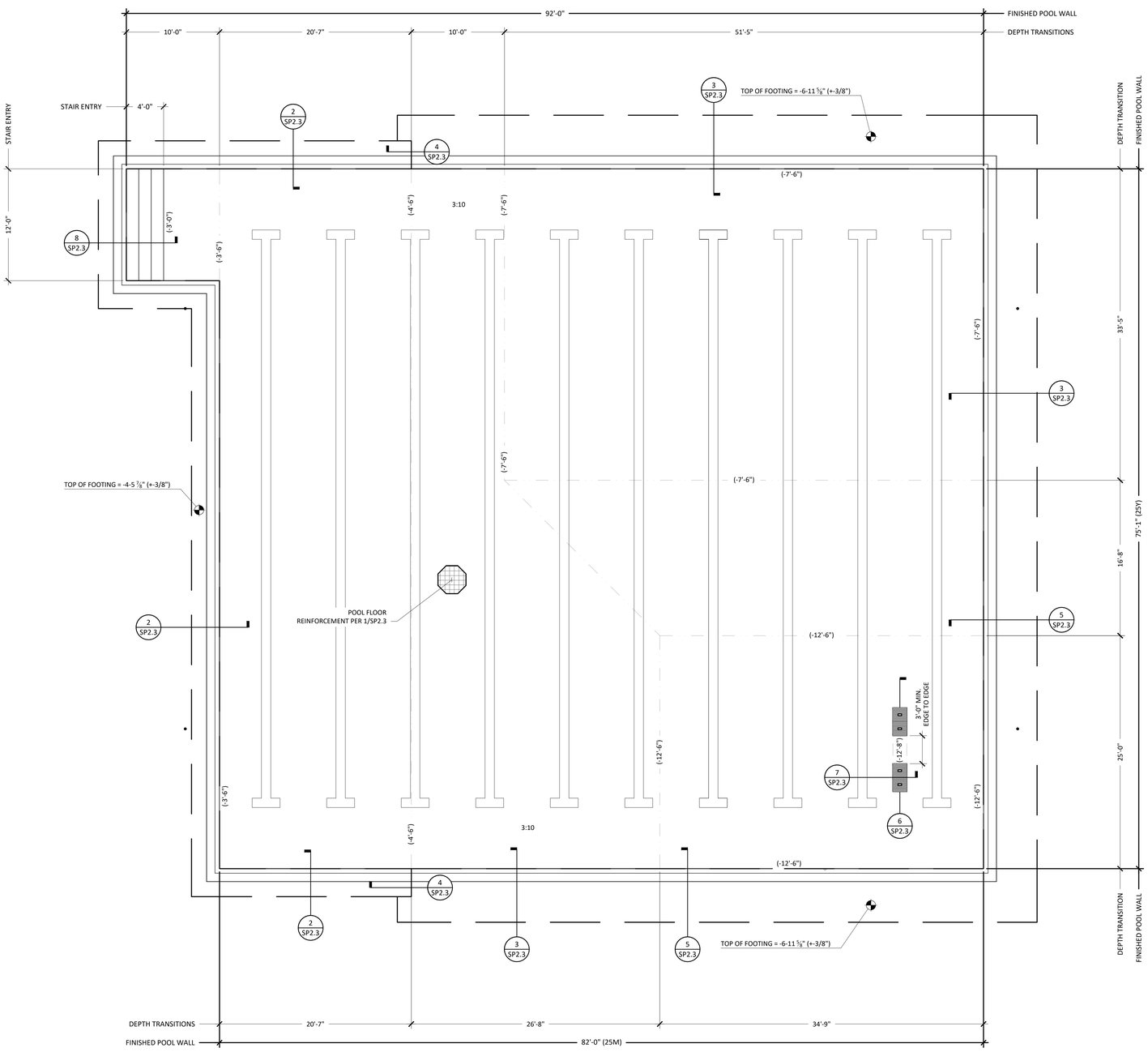

STRUCTURAL GENERAL NOTES:

1. THE POOL SHALL BE EXCAVATED INTO FIRM SOIL SUITABLE TO SUPPORT THE SWIMMING POOL AS DETERMINED BY THE PROJECT GEOTECHNICAL ENGINEER.
2. ALL PLAN DIMENSIONS ARE TO POOL FINISH AND SHALL BE VERIFIED PRIOR TO THE START OF WORK IN ACCORDANCE WITH ARCHITECT DRAWINGS.
3. ANY CHANGES OR UNCLEAR PORTIONS OF THIS PLAN SHALL BE BROUGHT TO THE ATTENTION OF THE ENGINEER BEFORE PROCEEDING.
4. ALL APPLICABLE STATE AND LOCAL LAWS AND CODES SHALL BE FOLLOWED.
5. ANY CONDITION NOT SPECIFICALLY COVERED IN THIS PLAN OR UNUSUAL CONDITIONS ENCOUNTERED DURING EXCAVATION SHALL BE BROUGHT TO THE ATTENTION OF THE ENGINEER BEFORE PROCEEDING.
6. ALL SITE GRADING SHALL BE PERFORMED IN CONFORMANCE WITH THE PROJECT SOILS REPORT. SOILS BELOW EXTERIOR FLAT WORK SHALL BE PREPARED IN ACCORDANCE WITH PROJECT SOILS REPORT.
7. FOR AREAS WHERE A RAMP HAS BEEN EXCAVATED AND BACKFILL IS NOT COMPACTED TO A MIN. 90% MAXIMUM DRY DENSITY OF THE ASTM D1557 COMPACTION TEST, REINFORCEMENT SHALL BE SPACED NO LESS THAN 6 INCH CENTERS EACH WAY. THE EXTRA HORIZONTAL REINFORCEMENT SHALL EXTEND 3 FEET PAST THE EDGE OF THE RAMP EXCAVATION ON EITHER SIDE. SHOTCRETE COVER OVER THE REINFORCEMENT ON THE OUTSIDE OF THE POOL SHALL BE INCREASED FROM 3 TO 4 INCHES.
8. EXPANSIVE SOILS SHALL BE MAINTAINED AT AN ELEVATED MOISTURE CONTENT DURING CONSTRUCTION AND IMMEDIATELY PRIOR TO CONCRETE PLACEMENT.

DESIGN BASIS:

1. 2023 CALIFORNIA BUILDING CODE (CBC)
2. GEOTECHNICAL INVESTIGATION BY TECHNICON PN: 240282.001 ON JUNE 12, 2024.

DESIGN PARAMETERS:

1. ALLOWABLE BEARING CAPACITY: 3,000 PSF
2. SEISMIC: S_{DS} = 0.891g S_{D1} = .0672g

MATERIALS:

1. CONCRETE: THE SPECIFIED CONCRETE IS FOR USE IN THE SWIMMING POOL FOOTINGS, SWIMMING POOL FLOORS AND SPLASHPAD FLOOR.
   A. NORMAL WEIGHT CONCRETE SHALL BE MIXED AND PROPORTIONED IN ACCORDANCE WITH ACI 301. CEMENT TO AGGREGATE, IN DRY WEIGHT, SHALL NOT BE LESS THAN ONE TO FIVE.
   B. MINIMUM COMPRESSIVE STRENGTH, f'_c, SHALL BE 4,500 PSI @ 28 DAYS
   C. SLUMP: 3 INCH ± 1 INCH
   D. AGGREGATE: 1 INCH MAX
   E. CEMENT CONTENT: 600 LBS/YDS MIN.
   F. W/C RATIO: 0.45 MAX
   G. SHRINKAGE AT 28 DAYS (PER ASTM C-157) SHALL NOT EXCEED 0.055% FOR DRY CURING.
   H. CEMENT USED SHALL BE ASTM C150, TYPE II/V CEMENT. FLY ASH MAY BE USED PROVIDED THE FLY ASH CONTENT DOES NOT EXCEED 15% OF THE CEMENTITIOUS MATERIAL CONTENT. FLY ASH SHALL BE ASTM C618, CLASS C OR F.
   I. CONCRETE SHALL BE PLACED ON OR AGAINST FIRM UNDISTURBED SOIL.
   J. ALL ELECTRICAL SHALL BE SECURELY GROUNDED BEFORE CONCRETE IS PLACED.
2. REINFORCEMENT:
   A. USE CBC SECTION 1908, ACI 318 AND ACI 506 AS A GUIDELINE.
   B. LAP SPLICES SHALL BE 60 BAR DIAMETERS.
   C. REINFORCMENET SHALL BE GRADE 60
   D. 3" MIN COVER FOR REINFORCEMENT TO SOIL.
   E. UP TO 2 INCH DIAMETER PIPES MAY BE PLACED IN THE LOWER OUTSIDE CORNER OF THE BOND BEAM. A 1.5 INCH CLEARANCE SHALL BE MAINTAINED BETWEEN PIPING AND ANY PARALLEL REINFORCEMENT. IF METAL PIPING IS USED AND IS PLACED IN SHOTCRETE, IT SHALL BE WRAPPED IN VISQUEEN OR HEAVY BROWN PAPER, EXCEPT WHERE IT PASSES PERPENDICULARLY THROUGH THE SHOTCRETE.
   F. DECK DOWELS BETWEEN THE BOND BEAM AND ADJACENT DECKING SHALL NOT BE USED.
   G. CONTRACTOR SHALL PROVIDE +2% ALLOWANCE FOR REINFORCING STEEL TO BE USED AT THE DISCRETION OF THE ENGINEER.
   H. CLEARANCE BETWEEN #5 BARS AND SMALLER SHALL BE MINIMUM 2 1/2 INCH. CLEARANCES BETWEEN #6 BARS AND GREATER SHALL BE MINIMUM 6 X BAR DIA.
3. GRAVEL UNDERDRAIN:
   A. PER THE PROJECT GEOTECHNICAL ENGINEER, a 6 INCH GRAVEL UNDERDRAIN SHALL BE INSTALLED BELOW THE POOL FLOOR. GRAVEL SHALL CONSIST OF CALTRANS CLASS II PERMEABLE MATERIAL. THE BASE OF THE DRAINAGE LAYER SHALL BE SLOPED AT LEAST 2 PERCENT TOWARDS A LOW POINT NEAR THE CENTER OF THE EXCAVATION, WHICH SHALL CONTAIN A SHALLOW TRENCH FOR A SUBDRAIN. AN IMPERVIOUS MEMBRANE SHOULD BE PROVIDED BELOW THE BOTTOM OF THE PERMEABLE GRAVEL.
   B. PER THE PROJECT GEOTECHNICAL ENGINEER, 4 INCH DIAMETER PERFORATED SDR 35 OR EQUIVALENT. PIPE SHALL BE INSTALLED IN THE GRAVEL AT THE BASE OF THE SUBDRAIN TRENCH AND SHALL SLOPE AT 1% MIN. SLOPE TO AN APPROPRIATE DISCHARGE POINT THAT CAN BE PERIODICALLY OBSERVED FOR LEAKAGE. PIPE SHOULD BE PLACED WITH PERFORATIONS DOWN WITH ALL JOINTS GLUED. PIPE SHALL BE SOLID PAST THE EXTENTS OF THE GRAVEL BLANKET.
   C. A RELIEF VALVE SHOULD BE INSTALLED AT THE BOTTOM OF THE POOL TO REDUCE THE RISK OF HYDROSTATIC UPLIFT OF THE POOL WHEN EMPTY PER THE PROJECT SOILS ENGINEER.
4. BOND BREAK:
   A. BOND BREAK SHALL CONSIST OF 10 MIL SHEET VINYL OR 20 LB ROOFING FELT.

CRACK REPAIR:

1. SHRINKAGE CRACK TOLERANCE: 0.02 INCH. CRACKS TO BE REPAIRED SHALL BE V-NOTCHED TO A MINIMUM DEPTH OF 3/4 INCH AND FILLED WITH PATCHING MORTAR PRIOR TO PLASTER.

REMODEL NOTES:

1. WHERE NEW SHOTCRETE/CONCRETE IS PLACED AGAINST EXISTING CONCRETE OR SHOTCRETE, THE INTERFACE SHALL BE CLEAN AND FREE OF LAITANCE. THE INTERFACE IS TO BE INTENTIONALLY ROUGHENED TO 1/4" AMPLITUDE. ALL LOOSE OR DETERIORATED MATERIAL IS TO BE REMOVED. (E) CONCRETE/SHOTCRETE TO BE AT A STANDARD SATURATED SURFACE DRY CONDITION AT THE INTERFACE PRIOR TO PLACEMENT ON (N) CONCRETE/SHOTCRETE. APPLY EPOXY BONDING ADHESIVE TO INTERFACE PRIOR TO (N) SHOTCRETE PLACEMENT.
2. EPOXY TO BE SELECTED FROM THE FOLLOWING LIST OR AN APPROVED EQUAL. ALL HOLES SHOULD BE BLOWN OUT WITH COMPRESSED AIR PRIOR TO INSTALLING EPOXY TO ENSURE GOOD BOND. INSTALL EPOXY PER MANUFACTURERS ICC REPORT,
   SIMPSON SET-3G ICC-ES REPORT ESR-4057
   HILTI HIT-HY 150 MAX SD ICC-ES REPORT ESR-3013

REQUIRED SPECIAL INSPECTIONS:

1. EXCAVATION INSPECTION.
2. REINFORCEMENT PLACEMENT INSPECTION.
3. CONCRETE PLACEMENT INPSECTION.
4. COMPACTION TESTING OF ALL EARTH WORK.

REQUIRED TESTING:

1. CONCRETE COMPRESSION TEST FOR f'_c > 3,000 PSI (EVERY 50 CU YDS)

SEE APPROVED DSA 103 FOR COMPLETE LISTING OF STRUCTURAL TESTS AND SPECIAL INSPECTIONS.

COUNTY OF FRESNO ENVIRONMENTAL HEALTH DIVISION
1221 Fulton Street – 3rd Floor (559) 600-3357
APPROVED
WITH NOTED CORRECTIONS AND
SUBJECT TO FIELD INSPECTIONS
BY: _____ DATE: 8/26/25
APPROVAL OF THIS PLAN DOES NOT CONSTITUTE PERMISSION TO VIOLATE ANY APPLICABLE CITY OR COUNTY ORDINANCE, OR STATE LAW, AND SHALL NOT PREVENT THIS DEPARTMENT FROM REQUIRING CORRECTION OF ERRORS OR OMISSIONS IN PLANS, SPECIFICATIONS OR CONSTRUCTION.

COMPETITION POOL FOUNDATION PLAN
3/16" = 1'-0"
1

AGD
ARCHITECTURE | DESIGN

ANDREW GOODWIN DESIGNS
1238 MONTEREY STREET
SAN LUIS OBISPO, CA 93422
t: (805) 439-1611
www.andrewgoodwin.us

RSM
Design | Engineering
ROGERS STRINGER MCCLELLAND
1981 N. BROADWAY, SUITE 202
WALNUT CREEK, CA 94596
PH. (925) 217-6619
www.rsm-de.com

These drawings are instruments of service and are the property of Andrew Goodwin Designs, Inc. The information represented on these drawings are exclusively for the project indicated and shall not be transferred or otherwise reproduced without express written permission of Andrew Goodwin. Copyright 2023

SEAL

NOT FOR CONSTRUCTION

PROJECT

TRANQUILLITY HIGH SCHOOL
AQUATIC CENTER MODERNIZATION
6052 Juanche Ave,
Tranquillity, CA 93668

CLIENT

GOLDEN PLAINS UNIFIED SCHOOL DISTRICT

SHEET TITLE

COMPETITION POOL FOUNDATION PLAN

PHASE DESCRIPTION
100% CD FCHD APPROVAL SWIMMING POOL

DATE: 8/26/2025
TECHNICIAN: RD
PROJECT MANAGER: BR
JOB NUMBER: 791

SHEET NUMBER
SP2.0-1

PLOT DATE: 4/24/2025 3:26:20 PM

Copyright © **2025** RSM, Inc.-All Rights Reserved-This document was prepared for use only by the client, only for the purposes stated, and within a reasonable time from issuance. Non-commercial, educational, and scientific use of this document by regulatory agencies is regarded as a "fair use" and not a violation of copyright. Regulatory agencies may make additional copies of this document for internal use. Copies may also be made available to the public as required by law. The reprint must acknowledge the copyright and indicate that permission to reprint has been received.

TEACHING POOL DEMOLITION KEYNOTES:

1. (E) COPING TO BE DEMOLISHED, TYP.
2. DEMO PLASTER AND CHIP WALL MIN 0.5" MAX 2" AS REQUIRED. INSTALL VERTICAL SIKA EMACO 488 MIN 0.25" MAX 2.0" TO ACHIEVE FINISHED DIMENSIONS.
3. (E) SKIMMER TO REMAIN, TYP.
4. (E) EQUALIZER COVER TO BE REMOVED AND LINE TO BE CAPPED, TYP.
5. (E) POOL SHELL TO BE CORED FOR INSTALLATION OF (N) WALL RETURN, TYP.
6. (E) LIGHT NICHE TO REMAIN, (E) LIGHT FIXTURE TO BE REMOVED, TYP.
7. BOND BEAM DEMOLITION PER 1/SP2.4 FOR (N) SKIMMER/AUTOFILL INSTALLATION, TYP.
8. (E) POOL SHELL PARTIAL DEMOLITION PER 2/SP2.4 FOR INSTALLATION OF (N) UNDERWATER LIGHT NICHE, TYP.
9. (E) RECESSED STEP INSERTS TO BE DEMOLISHED AND FILLED WITH NON-SHRINK GROUT COMPATIBLE WITH SIKA EMACO 488. (E) FIGURE 4 HANDRAILS TO BE DEMOLISHED.

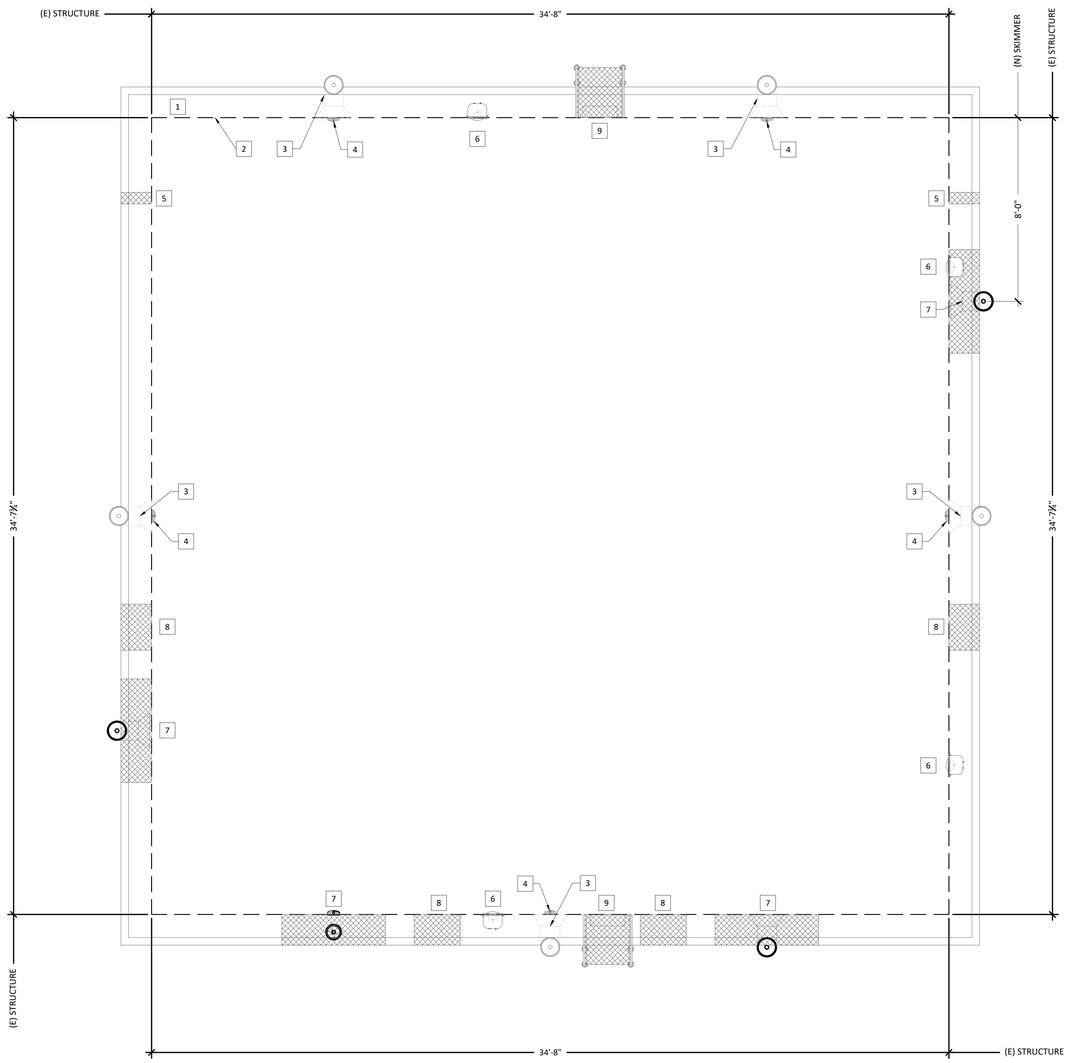

(E) TEACHING POOL DEMOLITION PLAN
3/8" = 1'-0"
2

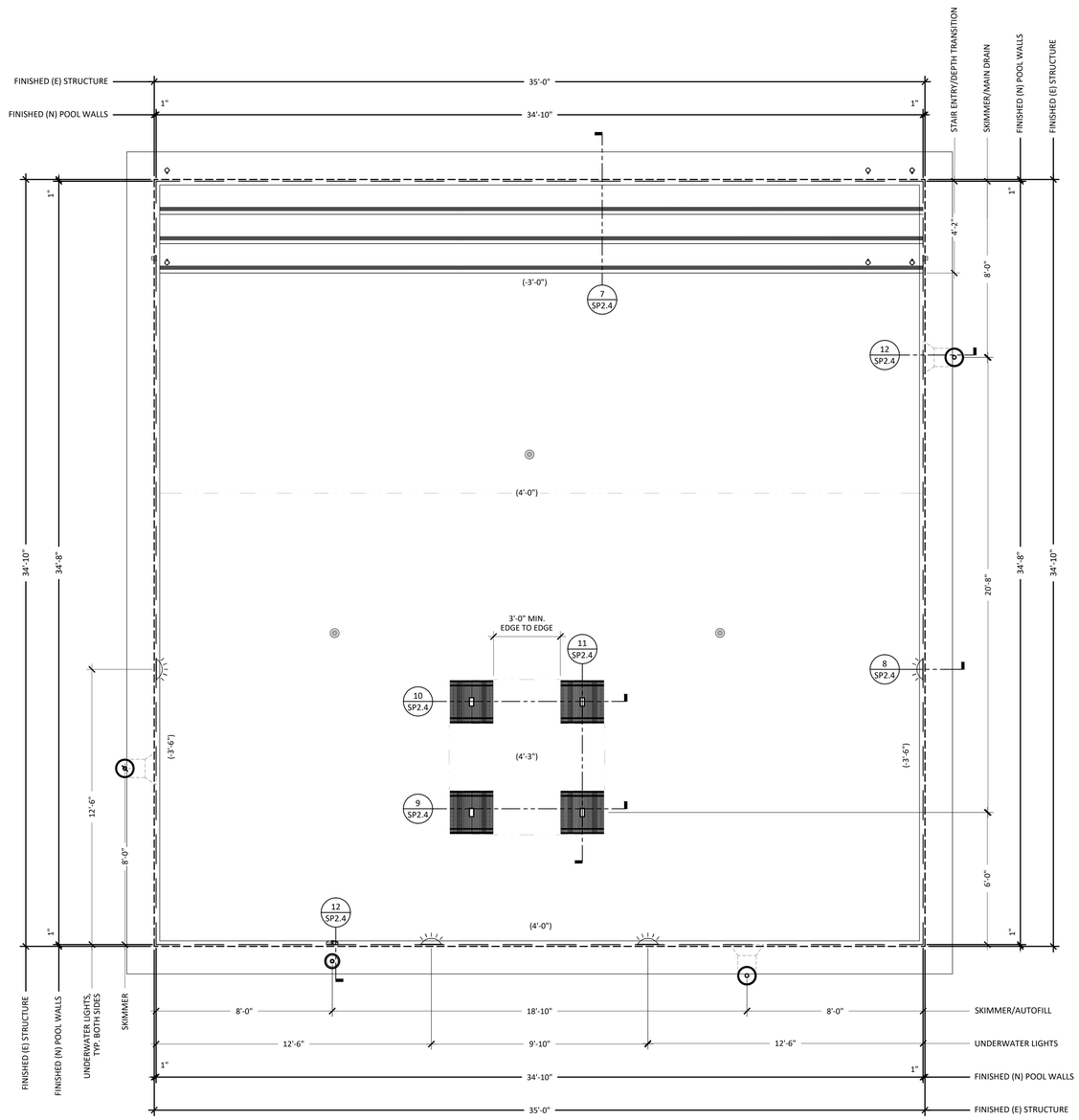

COUNTY OF FRESNO ENVIRONMENTAL HEALTH DIVISION
1221 Fulton Street - 3rd Floor (559) 600-3357
APPROVED WITH NOTED CORRECTIONS AND SUBJECT TO FIELD INSPECTIONS
BY: DATE: 8/26/25
APPROVAL OF THIS PLAN DOES NOT CONSTITUTE PERMISSION TO VIOLATE ANY APPLICABLE CITY OR COUNTY ORDINANCE, OR STATE LAW, AND SHALL NOT PREVENT THIS DEPARTMENT FROM REQUIRING CORRECTION OF ERRORS OR OMISSIONS IN PLANS, SPECIFICATIONS OR CONSTRUCTION.

(N) TEACHING POOL STRUCTURAL PLAN
3/8" = 1'-0"
2

AGD
ARCHITECTURE | DESIGN

ANDREW GOODWIN DESIGNS
1238 MONTEREY STREET
SAN LUIS OBISPO, CA 93422
t: (805) 439-1611
www.andrewgoodwin.us

RSM
Design | Engineering
ROGERS STRINGER MCCLELLAND
1981 N. BROADWAY, SUITE 202
WALNUT CREEK, CA 94596
PH. (925) 217-6619
www.rsm-de.com

These drawings are instruments of service and are the property of Andrew Goodwin Designs, Inc. The information represented on these drawings are exclusively for the project indicated and shall not be transferred or otherwise reproduced without express written permission of Andrew Goodwin. Copyright 2023

SEAL

NOT FOR CONSTRUCTION

PROJECT

TRANQUILLITY HIGH SCHOOL
AQUATIC CENTER MODERNIZATION
6052 Juanche Ave,
Tranquillity, CA 93668

CLIENT

GOLDEN PLAINS UNIFIED SCHOOL DISTRICT

SHEET TITLE

TEACHING POOL STRUCTURAL PLAN

PHASE DESCRIPTION
100% CD FCHD APPROVAL SWIMMING POOL

DATE: 8/26/2025
TECHNICIAN: RD
PROJECT MANAGER: BR
JOB NUMBER: 791

SHEET NUMBER
SP2.1-1

PLOT DATE: 4/24/2025 3:26:20 PM

Copyright © **2025** RSM, Inc.-All Rights Reserved-This document was prepared for use only by the client, only for the purposes stated, and within a reasonable time from issuance. Non-commercial, educational, and scientific use of this document by regulatory agencies is regarded as a "fair use" and not a violation of copyright. Regulatory agencies may make additional copies of this document for internal use. Copies may also be made available to the public as required by law. The reprint must acknowledge the copyright and indicate that permission to reprint has been received.

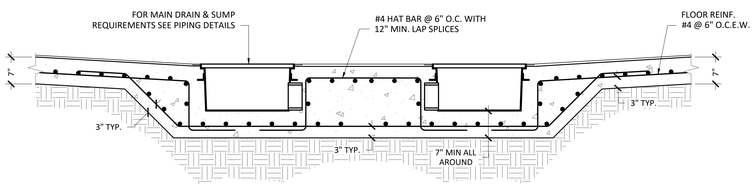

SPLASHPAD MAIN DRAIN 4
3/4" = 1'-0"

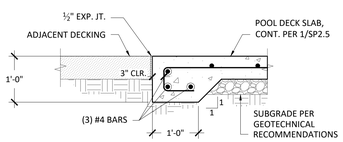

SPLASHPAD DECK EDGE 3
3/4" = 1'-0"

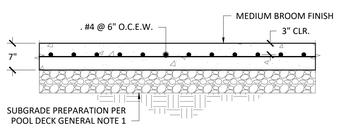

TYPICAL SPLASHPAD SLAB 2
3/4" = 1'-0"

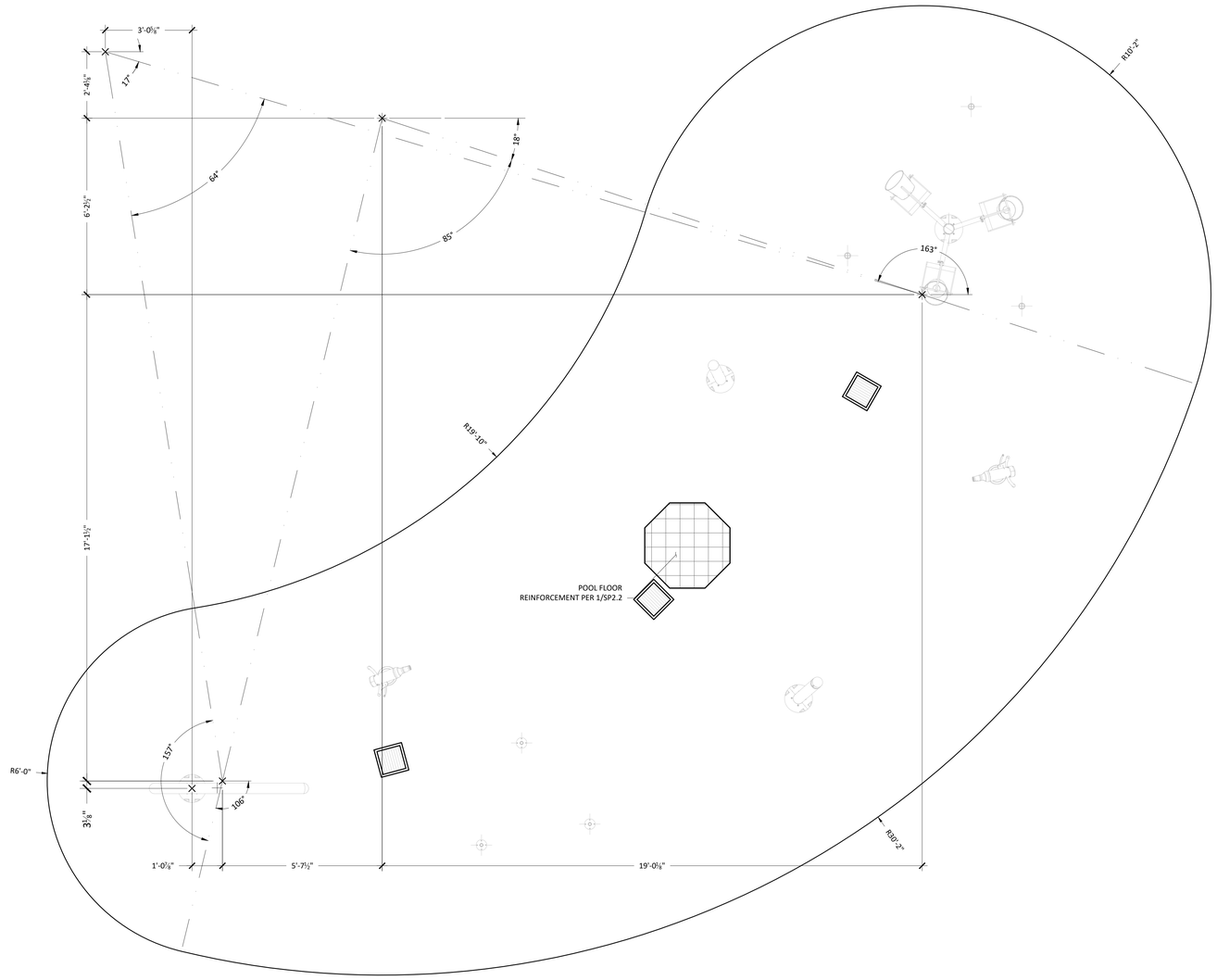

COUNTY OF FRESNO ENVIRONMENTAL HEALTH DIVISION
1221 Fulton Street – 3rd Floor (559) 600-3357
APPROVED
WITH NOTED CORRECTIONS AND
SUBJECT TO FIELD INSPECTIONS
BY: DATE: 8/26/25
APPROVAL OF THESE PLANS DOES NOT CONSTITUTE PERMISSION TO VIOLATE
ANY APPLICABLE CITY OR COUNTY ORDINANCE, OR STATE LAW, AND SHALL
NOT PREVENT THE EHD DEPARTMENT FROM REQUIRING CORRECTION OF ERRORS
OR OMISSIONS IN PLANS, SPECIFICATIONS OR CONSTRUCTION.

SPLASH PAD STRUCTURAL PLAN 1
1/2" = 1'-0"

AGD
ARCHITECTURE | DESIGN

ANDREW GOODWIN DESIGNS
1238 MONTEREY STREET
SAN LUIS OBISPO, CA 93422
t: (805) 439-1611
www.andrewgoodwin.us

RSM
Design | Engineering
ROGERS STRINGER MCCLELLAND
1981 N. BROADWAY, SUITE 202
WALNUT CREEK, CA 94596
PH. (925) 217-6619
www.rsm-de.com

These drawings are instruments of service and are the property of Andrew Goodwin Designs, Inc. The information represented on these drawings are exclusively for the project indicated and shall not be transferred or otherwise reproduced without express written permission of Andrew Goodwin.
Copyright 2023

SEAL

NOT FOR CONSTRUCTION

PROJECT

TRANQUILLITY HIGH SCHOOL
AQUATIC CENTER MODERNIZATION
6052 Juanche Ave,
Tranquillity, CA 93668

CLIENT

GOLDEN PLAINS UNIFIED SCHOOL DISTRICT

SHEET TITLE

SPLASH PAD STRUCTURAL PLAN

PHASE DESCRIPTION
100% CD FCHD APPROVAL
SWIMMING POOL

DATE: 8/26/2025
TECHNICIAN: RD
PROJECT MANAGER: BR
JOB NUMBER: 791

SHEET NUMBER
SP2.2-1

PLOT DATE: 4/24/2025 3:26:20 PM

Copyright © **2025** RSM, Inc.-All Rights Reserved-This document was prepared for use only by the client, only for the purposes stated, and within a reasonable time from issuance. Non-commercial, educational, and scientific use of this document by regulatory agencies is regarded as a "fair use" and not a violation of copyright. Regulatory agencies may make additional copies of this document for internal use. Copies may also be made available to the public as required by law. The reprint must acknowledge the copyright and indicate that permission to reprint has been received.

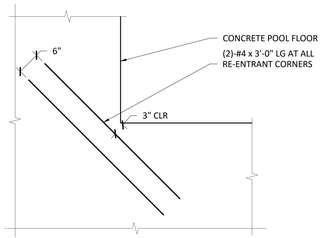

TYPICAL ADDITIONAL REINF AT RE-ENTRANT CORNERS (10)
NTS

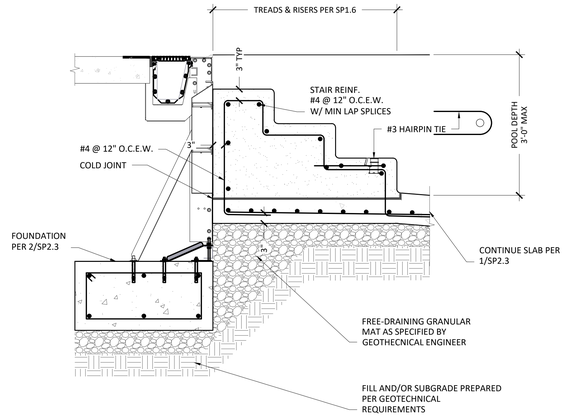

NOTE - BACKFILL, DECK, AND DRAINS (SPECIFIED BY OTHERS) OMITTED FOR CLARITY

COMPETITION POOL STAIRS (8)
NTS

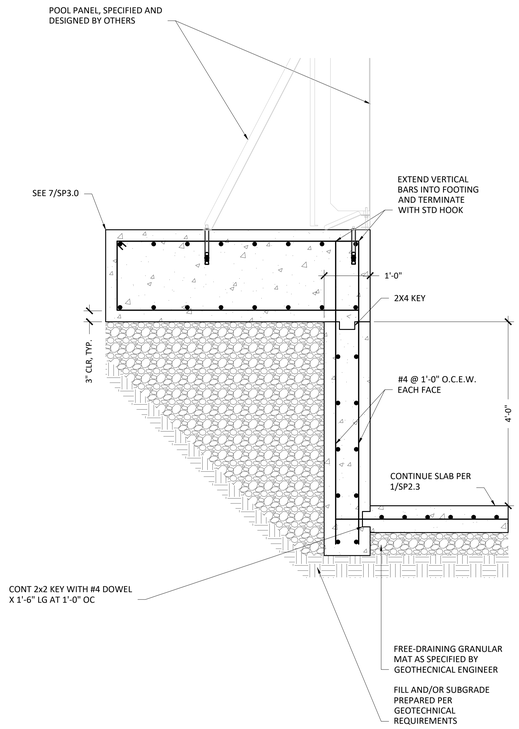

NOTE - BACKFILL, DECK, AND DRAINS (SPECIFIED BY OTHERS) OMITTED FOR CLARITY

TYPICAL FLOOR BELOW 4FT WALL FOOTING SECTION (5)
3/4"=1'-0"

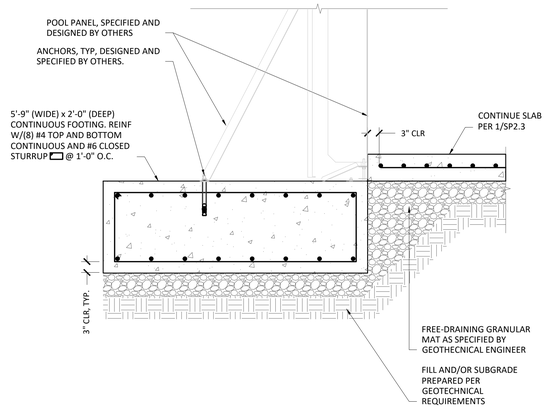

NOTE - BACKFILL, DECK, AND DRAINS (SPECIFIED BY OTHERS) OMITTED FOR CLARITY

7 FT WALL PANEL FOOTING (3)
3/4"=1'-0"

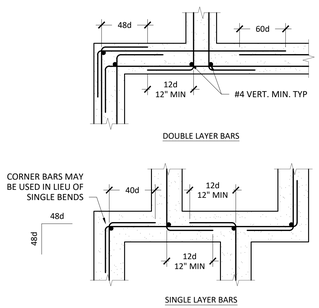

TYPICAL CORNERS BAR DETAIL (9)
NTS

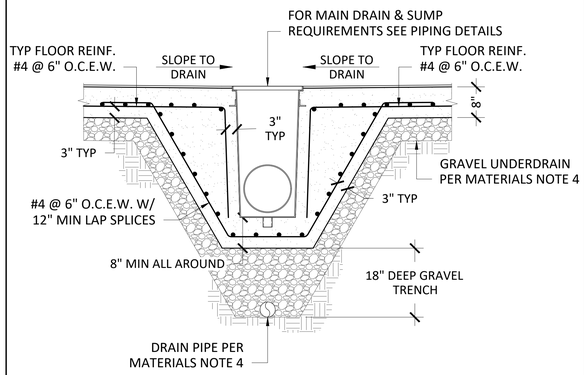

TYPICAL ADDITIONAL REINF AT RE-ENTRANT CORNERS (7)
NTS

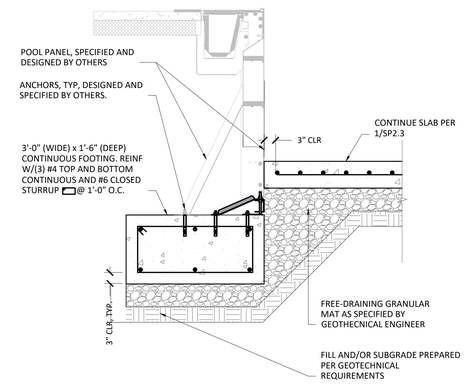

NOTE - BACKFILL, DECK, AND DRAINS (SPECIFIED BY OTHERS) OMITTED FOR CLARITY

4.5 FT WALL PANEL FOOTING (2)
3/4"=1'-0"

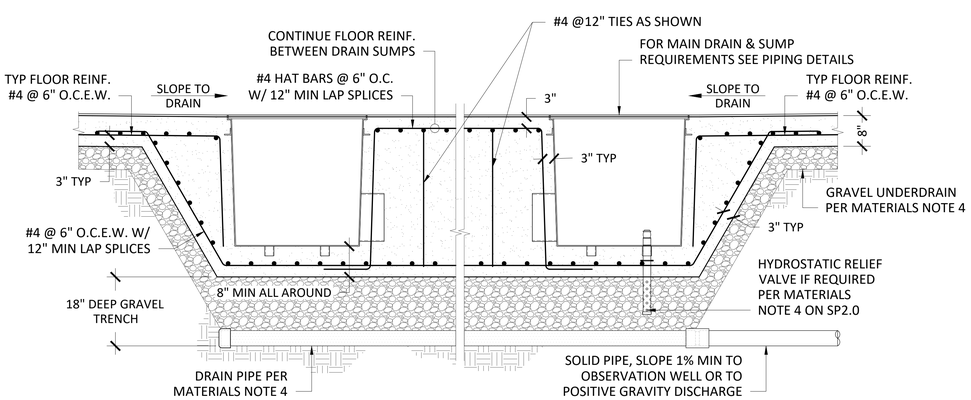

7 FT WALL PANEL FOOTING (6)
3/4"=1'-0"

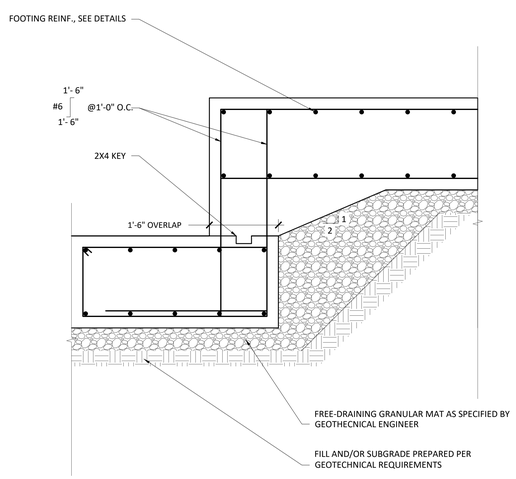

TYPICAL STEP IN FOOTING (4)
NTS

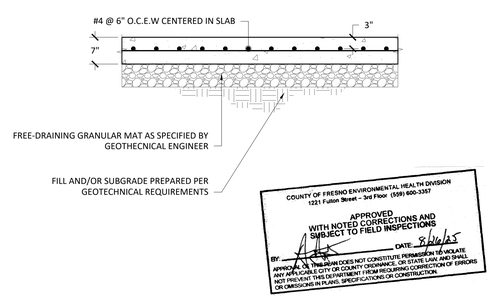

TYPICAL DECK SLAB (1)
NTS

AGD ARCHITECTURE | DESIGN

ANDREW GOODWIN DESIGNS
1238 MONTEREY STREET
SAN LUIS OBISPO, CA 93422
t: (805) 439-1611
www.andrewgoodwin.us

RSM Design | Engineering
ROGERS STRINGER MCCLELLAND
1981 N. BROADWAY, SUITE 202
WALNUT CREEK, CA 94596
PH. (925) 217-6619
www.rsm-de.com

These drawings are instruments of service and are the property of Andrew Goodwin Designs, Inc. The information represented on these drawings are exclusively for the project indicated and shall not be transferred or otherwise reproduced without express written permission of Andrew Goodwin. Copyright 2023

SEAL

NOT FOR CONSTRUCTION

PROJECT

TRANQUILLITY HIGH SCHOOL
AQUATIC CENTER MODERNIZATION
6052 Juanche Ave,
Tranquillity, CA 93668

CLIENT

GOLDEN PLAINS UNIFIED SCHOOL DISTRICT

SHEET TITLE

COMPETITION POOL STRUCTURAL DETAILS

PHASE DESCRIPTION
100% CD FCHD APPROVAL SWIMMING POOL

DATE: 8/26/2025
TECHNICIAN: RD
PROJECT MANAGER: BR
JOB NUMBER: 791

SHEET NUMBER
SP2.3-1

PLOT DATE: 4/24/2025 3:26:20 PM

Copyright © **2025** RSM, Inc.-All Rights Reserved-This document was prepared for use only by the client, only for the purposes stated, and within a reasonable time from issuance. Non-commercial, educational, and scientific use of this document by regulatory agencies is regarded as a "fair use" and not a violation of copyright. Regulatory agencies may make additional copies of this document for internal use. Copies may also be made available to the public as required by law. The reprint must acknowledge the copyright and indicate that permission to reprint has been received.

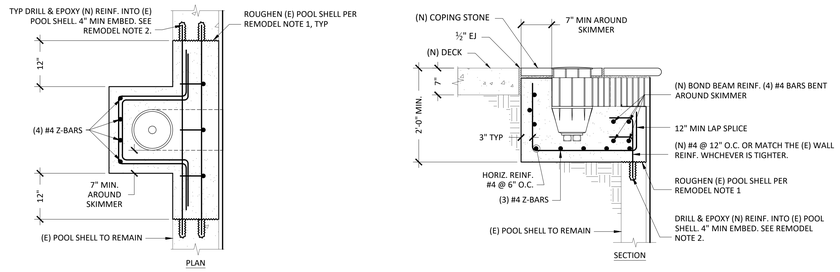

SKIMMER & AUTOFILL REPLACEMENT 12
3/4" = 1'-0"

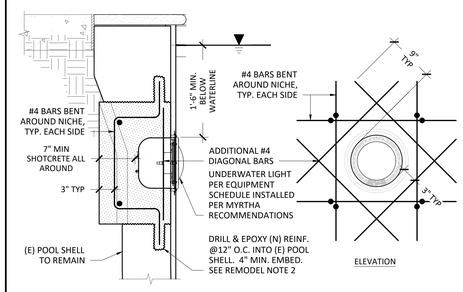

(N) UNDERWATER LIGHT 8
1" = 1'-0"

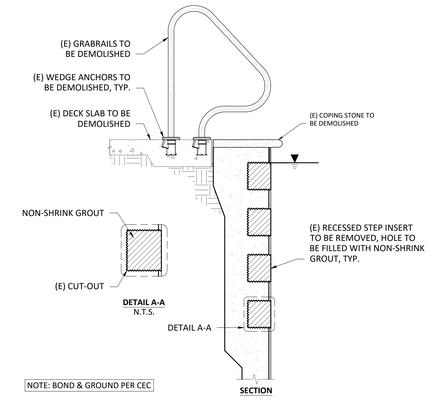

(E) RECESSED STEP DEMOLTION 4
1" = 1'-0"

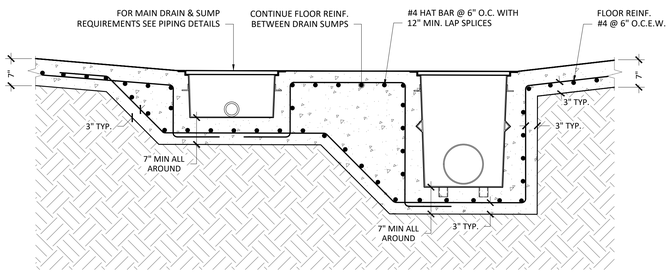

TEACHING POOL MAIN DRAINS 11
3/4" = 1'-0"

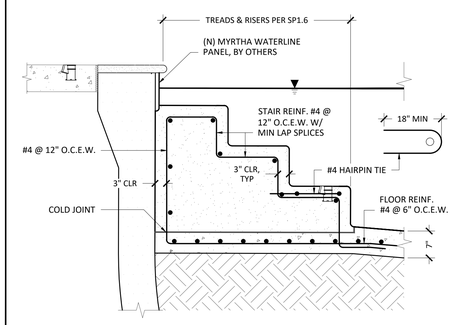

(N) POOL STAIRS 7
3/4" = 1'-0"

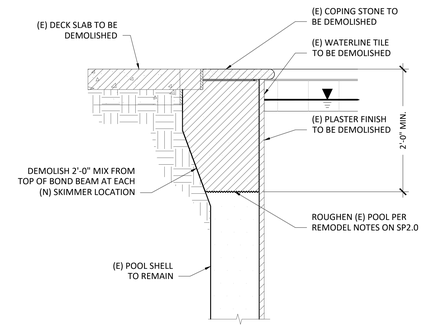

(N) SKIMMER LOCATION DEMOLITION 3
1" = 1'-0"

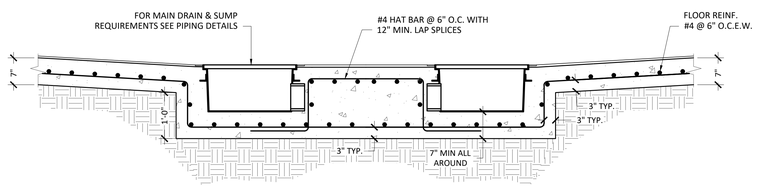

TEACHING POOL SLIDE RECIRCULATION MAIN DRAINS 10
3/4" = 1'-0"

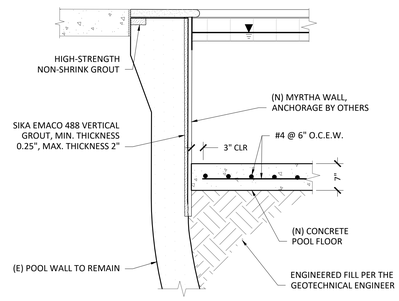

(N) MYRTHA WALL SHALLOWER THAN (N) POOL FLOOR 6
3/4" = 1'-0"

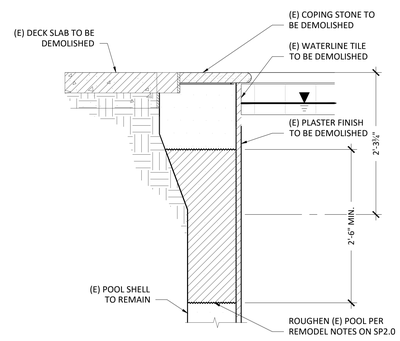

(N) LIGHT NICHE DEMOLITION 2
1" = 1'-0"

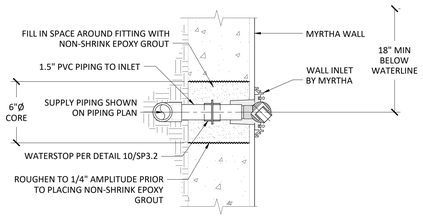

CAP PIPE & HYDROSTATICALLY TEST PER SPECIFICATIONS BEFORE CONCEALING

(N) WALL RETURN INLET IN (E) WALL 13
3/4" = 1'-0"

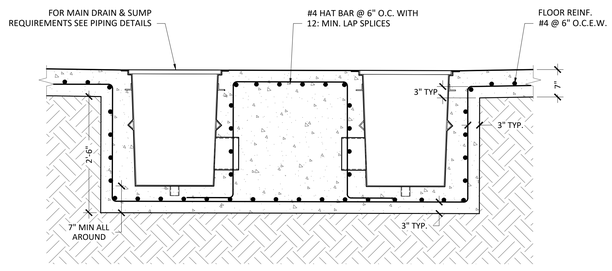

TEACHING POOL RECIRCULATION MAIN DRAIN 9
3/4" = 1'-0"

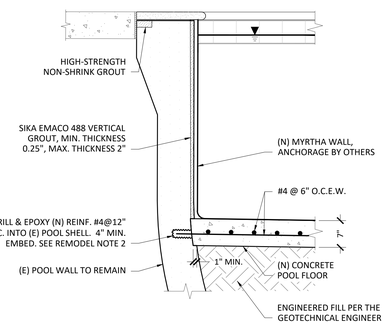

(N) MYRTHA WALL DEEPTER THAN (N) POOL FLOOR 5
3/4" = 1'-0"

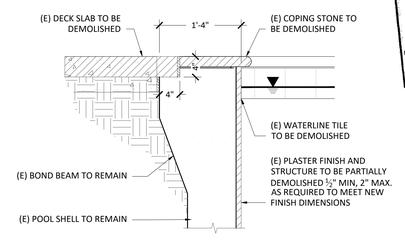

NOTE: CONTRACTOR TO CONFIRM BOND-BEAM DIMENSION ONSITE

(E) BOND BEAM DEMOLITION 1
1" = 1'-0"

AGD
ARCHITECTURE | DESIGN

ANDREW GOODWIN DESIGNS
1238 MONTEREY STREET
SAN LUIS OBISPO, CA 93422
t: (805) 439-1611
www.andrewgoodwin.us

RSM
Design | Engineering
ROGERS STRINGER MCCLELLAND
1981 N. BROADWAY, SUITE 202
WALNUT CREEK, CA 94596
PH. (925) 217-6619
www.rsm-de.com

These drawings are instruments of service and are the property of Andrew Goodwin Designs, Inc. The information represented on these drawings are exclusively for the project indicated and shall not be transferred or otherwise reproduced without express written permission of Andrew Goodwin. Copyright 2023

SEAL

NOT FOR CONSTRUCTION

PROJECT

TRANQUILLITY HIGH SCHOOL
AQUATIC CENTER MODERNIZATION
6052 Juanche Ave,
Tranquillity, CA 93668

CLIENT

GOLDEN PLAINS UNIFIED SCHOOL DISTRICT

COUNTY OF FRESNO ENVIRONMENTAL HEALTH DIVISION
1221 Fulton Street – 3rd Floor (559) 600-3357
APPROVED WITH NOTED CORRECTIONS AND SUBJECT TO FIELD INSPECTIONS
BY: DATE: 8/26/25
APPROVAL OF THIS PLAN DOES NOT CONSTITUTE PERMISSION TO VIOLATE ANY APPLICABLE CITY OR COUNTY ORDINANCE, OR STATE LAW, AND SHALL NOT PREVENT THIS DEPARTMENT FROM REQUIRING CORRECTION OF ERRORS OR OMISSIONS IN PLANS, SPECIFICATIONS OR CONSTRUCTION.

SHEET TITLE

TEACHING POOL STRUCTURAL DETAILS

PHASE DESCRIPTION
100% CD FCHD APPROVAL SWIMMING POOL

DATE: 8/26/2025
TECHNICIAN: RD
PROJECT MANAGER: BR
JOB NUMBER: 791

SHEET NUMBER
SP2.4-1

PLOT DATE: 4/24/2025 3:26:20 PM

Copyright © **2025** RSM, Inc.-All Rights Reserved-This document was prepared for use only by the client, only for the purposes stated, and within a reasonable time from issuance. Non-commercial, educational, and scientific use of this document by regulatory agencies is regarded as a "fair use" and not a violation of copyright. Regulatory agencies may make additional copies of this document for internal use. Copies may also be made available to the public as required by law. The reprint must acknowledge the copyright and indicate that permission to reprint has been received.

SITE PIPING NOTES:

1. OVERALL PIPING IS SHOWN IN DIAGRAMMATIC FORM TO INDICATE WORK TO BE DONE RATHER THAN TO SHOW EXACT ROUTING & LOCATION. MAKE USE OF ALL DATA IN CONTRACT DOCUMENTS, VERIFY AGAINST DEVELOPED FIELD CONDITIONS, & INSTALL WORK IN AN ORDERLY ARRANGEMENT IN A MANNER TO OVERCOME STRUCTURAL, MECHANICAL & ELECTRICAL INTERFERENCE.
2. TO BE USED IN CONJUNCTION WITH INDIVIDUAL POOL PIPING PLANS. FOR INFORMATION NOT SHOWN REFER TO INDIVIDUAL POOL PIPING PLANS.
3. ALL SUBGRADE WORK TO BE COMPLETED PRIOR TO TRENCHING AND INSTALLATION OF BELOW GRADE POOL PIPING.
4. POOL PIPING PLACED IN TRENCHES SHALL NOT BE STACKED ABOVE/BELOW PARALLEL PIPES.
5. PIPING SHALL NOT PENETRATE THROUGH THE VAULT FLOOR.
6. ALL PIPING PAST VAULTS TO BE SCHEDULE 40 CPVC UNLESS NOTED OTHERWISE.

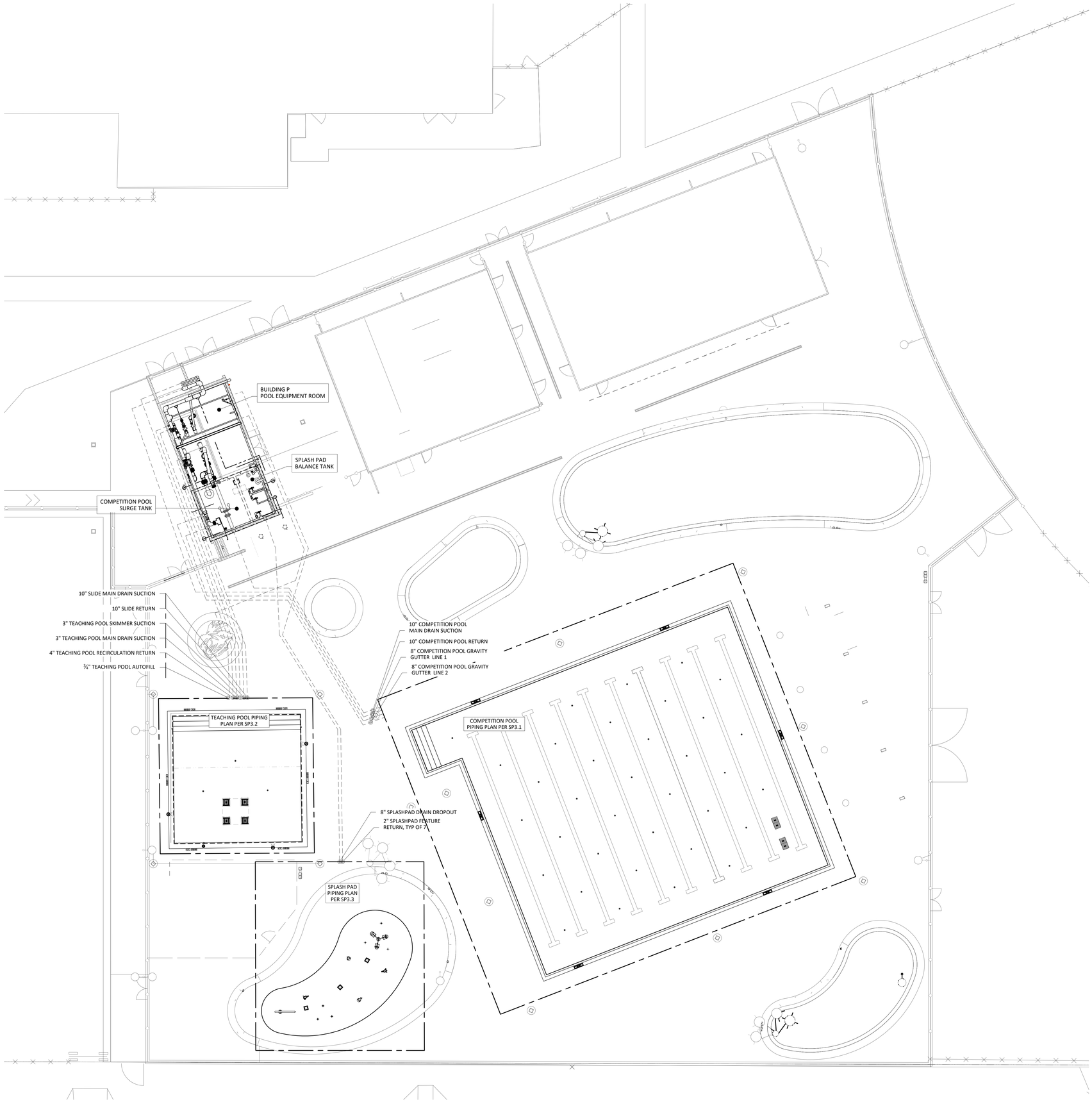

COUNTY OF FRESNO ENVIRONMENTAL HEALTH DIVISION
1221 Fulton Street – 3rd Floor (559) 600-3357
APPROVED
WITH NOTED CORRECTIONS AND
SUBJECT TO FIELD INSPECTIONS
BY: DATE: 8/26/25
APPROVAL OF THIS PLAN DOES NOT CONSTITUTE PERMISSION TO VIOLATE ANY APPLICABLE STATE OR COUNTY ORDINANCE, OR STATE LAW, AND SHALL NOT PREVENT THE DEPARTMENT FROM REQUIRING CORRECTION OF ERRORS OR OMISSIONS IN PLANS, SPECIFICATIONS OR CONSTRUCTION.

SITE PIPING PLAN
3/32" = 1'-0"
1

AGD
ARCHITECTURE | DESIGN

ANDREW GOODWIN DESIGNS
1238 MONTEREY STREET
SAN LUIS OBISPO, CA 93422
t: (805) 439-1611
www.andrewgoodwin.us

RSM
Design | Engineering
ROGERS STRINGER MCCLELLAND
1981 N. BROADWAY, SUITE 202
WALNUT CREEK, CA 94596
PH. (925) 217-6619
www.rsm-de.com

These drawings are instruments of service and are the property of Andrew Goodwin Designs, Inc. The information represented on these drawings are exclusively for the project indicated and shall not be transferred or otherwise reproduced without express written permission of Andrew Goodwin.
Copyright 2023

SEAL

REGISTERED PROFESSIONAL ENGINEER
NO. 25
MECHANICAL
STATE OF CALIFORNIA

NOT FOR CONSTRUCTION

PROJECT

TRANQUILLITY HIGH SCHOOL
AQUATIC CENTER MODERNIZATION
6052 Juanche Ave,
Tranquillity, CA 93668

CLIENT

GOLDEN PLAINS UNIFIED SCHOOL DISTRICT

SHEET TITLE

SITE PIPING PLAN

PHASE DESCRIPTION
100% CD FCHD APPROVAL
SWIMMING POOL

DATE: 8/26/2025
TECHNICIAN: RD
PROJECT MANAGER: BR
JOB NUMBER: 791

SHEET NUMBER
SP3.0-1

PLOT DATE: 4/24/2025 3:26:20 PM

Copyright © **2025** RSM, Inc.-All Rights Reserved-This document was prepared for use only by the client, only for the purposes stated, and within a reasonable time from issuance. Non-commercial, educational, and scientific use of this document by regulatory agencies is regarded as a "fair use" and not a violation of copyright. Regulatory agencies may make additional copies of this document for internal use. Copies may also be made available to the public as required by law. The reprint must acknowledge the copyright and indicate that permission to reprint has been received.

SITE PIPING NOTES:

1. OVERALL PIPING IS SHOWN IN DIAGRAMMATIC FORM TO INDICATE WORK TO BE DONE RATHER THAN TO SHOW EXACT ROUTING & LOCATION. MAKE USE OF ALL DATA IN CONTRACT DOCUMENTS, VERIFY AGAINST DEVELOPED FIELD CONDITIONS, & INSTALL WORK IN AN ORDERLY ARRANGEMENT IN A MANNER TO OVERCOME STRUCTURAL, MECHANICAL & ELECTRICAL INTERFERENCE.
2. TO BE USED IN CONJUNCTION WITH INDIVIDUAL POOL PIPING PLANS. FOR INFORMATION NOT SHOWN REFER TO INDIVIDUAL POOL PIPING PLANS.
3. ALL SUBGRADE WORK TO BE COMPLETED PRIOR TO TRENCHING AND INSTALLATION OF BELOW GRADE POOL PIPING.
4. POOL PIPING PLACED IN TRENCHES SHALL NOT BE STACKED ABOVE/BELOW PARALLEL PIPES.
5. PIPING SHALL NOT PENETRATE THROUGH THE VAULT FLOOR.
6. ALL PIPING PAST VAULTS TO BE SCHEDULE 40 CPVC UNLESS NOTED OTHERWISE.

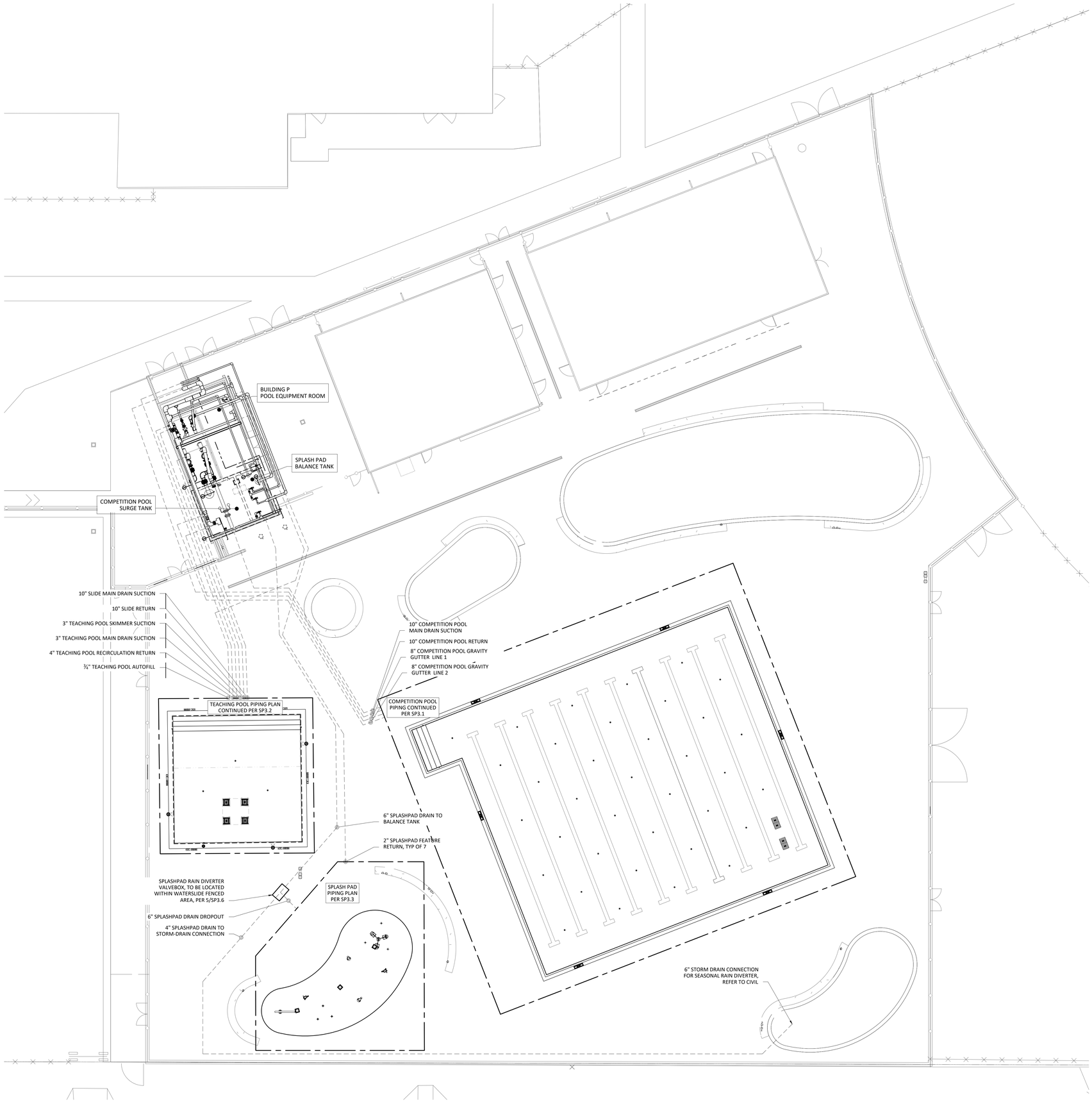

COUNTY OF FRESNO ENVIRONMENTAL HEALTH DIVISION
1221 Fulton Street – 3rd Floor (559) 600-3357
APPROVED
WITH NOTED CORRECTIONS AND
SUBJECT TO FIELD INSPECTIONS
BY: DATE: 8/26/25
APPROVAL OF THIS PLAN DOES NOT CONSTITUTE PERMISSION TO VIOLATE ANY APPLICABLE CITY OR COUNTY ORDINANCE, OR STATE LAW, AND SHALL NOT PREVENT THE DEPARTMENT FROM REQUIRING CORRECTION OF ERRORS OR OMISSIONS IN PLANS, SPECIFICATIONS OR CONSTRUCTION.

SITE PIPING PLAN
3/32" = 1'-0"
1

AGD
ARCHITECTURE | DESIGN

ANDREW GOODWIN DESIGNS
1238 MONTEREY STREET
SAN LUIS OBISPO, CA 93422
t: (805) 439-1611
www.andrewgoodwin.us

RSM
Design | Engineering
ROGERS STRINGER MCCLELLAND
1981 N. BROADWAY, SUITE 202
WALNUT CREEK, CA 94596
PH. (925) 217-6619
www.rsm-de.com

These drawings are instruments of service and are the property of Andrew Goodwin Designs, Inc. The information represented on these drawings are exclusively for the project indicated and shall not be transferred or otherwise reproduced without express written permission of Andrew Goodwin. Copyright 2023

SEAL

NOT FOR CONSTRUCTION

PROJECT

TRANQUILLITY HIGH SCHOOL
AQUATIC CENTER MODERNIZATION
6052 Juanche Ave,
Tranquillity, CA 93668

CLIENT

GOLDEN PLAINS UNIFIED SCHOOL DISTRICT

SHEET TITLE

SITE PIPING PLAN

PHASE DESCRIPTION
100% CD FCHD APPROVAL SWIMMING POOL

DATE: 8/26/2025
TECHNICIAN: RD
PROJECT MANAGER: BR
JOB NUMBER: 791

SHEET NUMBER
SP3.0-1

PLOT DATE: 4/24/2025 3:26:20 PM

Copyright © **2025** RSM, Inc.-All Rights Reserved-This document was prepared for use only by the client, only for the purposes stated, and within a reasonable time from issuance. Non-commercial, educational, and scientific use of this document by regulatory agencies is regarded as a "fair use" and not a violation of copyright. Regulatory agencies may make additional copies of this document for internal use. Copies may also be made available to the public as required by law. The reprint must acknowledge the copyright and indicate that permission to reprint has been received.

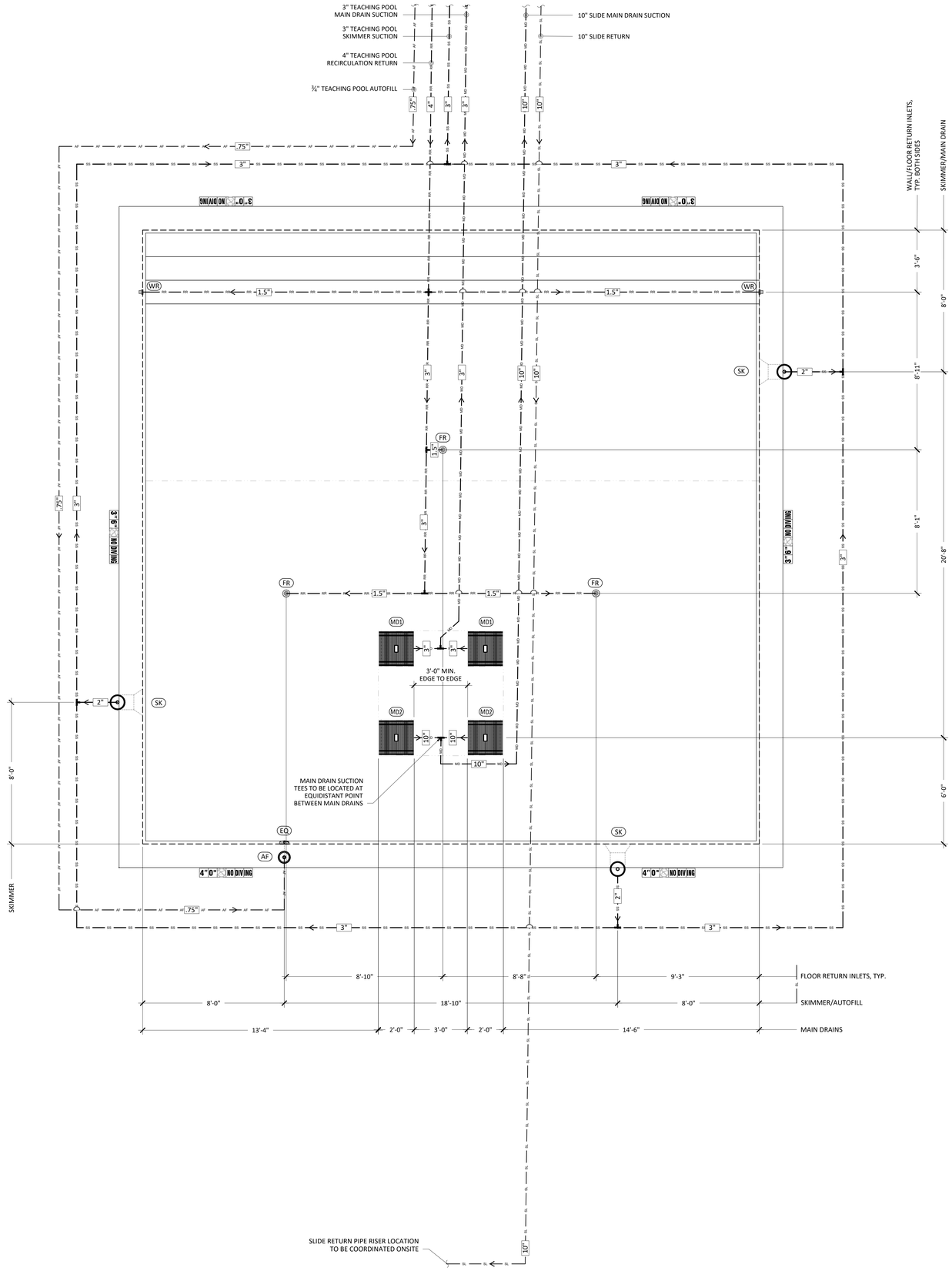

TEACHING POOL PIPING NOTES:

1. ALL PIPING SHALL BE NSF APPROVED (ANSI/NSF14), SCHEDULE 80 PVC (UNLESS OTHERWISE NOTED). PVC PIPE INSTALLED SHALL CONFORM TO THE REQUIREMENT OF TECHNICAL REPORT PPI-TTR 13 (8/73). PLASTIC PIPE INSTITUTE.
2. POOL CONTRACTOR SHALL INSTALL PIPING IN AN EFFICIENT MANNER TO REDUCE PRESSURE LOSSES.
3. PIPING SHALL BE INSTALLED WITHOUT AIR ENTRAPPING HIGH POINTS OR REVERSE SLOPES, I.E. ON DISCHARGE LINES, NO DESCENDING RUNS BEYOND HORIZONTAL OR ASCENDING RUNS; ON SUCTION LINES, NO DESCENDING RUNS BEYOND ASCENDING RUNS.
4. ALL UNDERGROUND PRESSURE AND SUCTION PIPING SHALL SLOPE A MINIMUM OF 1%.
5. THE TEE FEEDING FROM THE COMMON LINE BETWEEN THE SUCTION OUTLETS, TO THE PUMP(S) SHALL BE LOCATED APPROXIMATELY MIDWAY BETWEEN THE OUTLETS (ANSI/APSP-7).
6. ALL POOL RELATED PIPING, SHALL BE HYDRAULICALLY PRESSURE TESTED (WITH WATER, NOT AIR) TO A PRESSURE OF NOT LESS THAN 80 PSI FOR A PERIOD OF NO LESS THAN ONE (1) HOUR. CONTRACTOR IS RESPONSIBLE FOR THE MAINTENANCE OF A SUSTAINED 30 PSI PRESSURE ON ALL POOL RELATED PIPING THROUGHOUT THE COURSE OF CONSTRUCTION.
7. ALL DRAIN FITTINGS TO CARRY 100% OF RECIRCULATION RATE NOT TO EXCEED MAX RATED FLOW RATE FOR SELECTED DRAIN FITTING WHEN ONE OUTLET FITTING IS COVERED.
8. MAIN DRAIN PIPING SHALL CARRY 100% OF RECIRCULATION RATE AT A VELOCITY NOT TO EXCEED 6' PER SECOND.
9. ALL PIPING DESIGNED FOR 6' PER SECOND MAXIMUM SUCTION, 8' PER SECOND MAXIMUM PRESSURE, AND 3' PER SECOND MAXIMUM GRAVITY.
10. VERIFY PIPE SIZES WITH THE EQUIPMENT ROOM PLAN AND SCHEMATIC. IF THERE ARE ANY DISCREPANCIES, REPORT THEM TO THE ARCHITECT/ENGINEER IMMEDIATELY.
11. POOL CONTRACTOR SHALL COORDINATE ALL WORK WITH ARCHITECTURAL, MECHANICAL, ELECTRICAL AND STRUCTURAL DRAWINGS.
12. OVERALL PIPING IS SHOWN IN DIAGRAMMATIC FORM TO INDICATE WORK TO BE DONE RATHER THAN TO SHOW EXACT ROUTING & LOCATION. MAKE USE OF ALL DATA IN CONTRACT DOCUMENTS, VERIFY AGAINST DEVELOPED FIELD CONDITIONS, & INSTALL WORK IN AN ORDERLY ARRANGEMENT IN A MANNER TO OVERCOME STRUCTURAL, MECHANICAL & ELECTRICAL INTERFERENCE.

TEACHING POOL DESIGN DATA	
SIZE (LENGTH BY WIDTH):	34 FT 10 IN - 34 FT 8 IN
DEPTH PROFILE:	3 FT 0 IN - 4 FT 3 IN
SURFACE AREA:	1,213 SF
PERIMETER:	139 FT
VOLUME:	31,365 GAL
MAX BATHER LOAD:	60 BATHERS

TEACHING POOL SYSTEM DESIGN DATA	
TURNOVER RATE:	4.55 HRS
RECIRCULATION RATE:	115 GPM
FILTER AREA:	7.06 SF
FILTRATION RATE:	16.29 GPM/SF
BACKWASH FLOW RATE:	127 GPM

TEACHING POOL SUCTION OUTLET DATA	
RECIRCULATION PUMP MAX FLOW RATE @60FT:	255 GPM
MAIN DRAIN MAX APPROVED FLOW RATE:	408 GPM
SUCTION PIPE VELOCITY @ DESIGN FLOW RATE:	5.22 FPS

TEACHING POOL RECIRCULATION EQUIPMENT SCHEDULE

CALL OUT	EQUIPMENT	MODEL/DESCRIPTION	DETAIL
MD1	RECIRCULATION MAIN DRAIN	DALDERADO 24 X 24 X 12 - 03 SUMP AND GRATE, MAXIMUM FLOW RATE 408 GPM WITH MYRTHA COLLAR	2/SP3.5
MD2	SLIDE MAIN DRAIN	DALDERADO 24 X 24 X 30 - 10 SUMP AND GRATE, MAXIMUM FLOW RATE 1734 GPM WITH MYRTHA COLLAR	1/SP3.5
SK	SKIMMER	HAYWARD WIDEMOUTH SP1085 VINYL SKIMMER WITH ALL REQUIRED GASKETS AND AND MOUNT SPACE BLOCK, NO EQUALIZER COVERS	5/SP3.5
FR	FLOOR RETURN INLET	1.5" FLOOR INLET BY MYRTHA	4/SP3.5
WR	WALL RETURN INLET	2" WALL RETURN INLET BY MYRTHA	3/SP3.5
AF	AUTOFILL	MP INDUSTRIES, INC. AUTO-LEV AUTOMATIC WATER LEVELER, 3/4" WATER SUPPLY, 1-1/2" EQUALIZER LINE, W/ DECK WELL INSTALLATION	6/SP3.5
EQ	AUTOFILL EQUALIZER COVER	AQUASTAR 6HPHAxxx 6" ROUND OUTLET COVER	7/SP3.5

ALL EQUIPMENT NOTED ARE BASIS OF DESIGN & DESIGNATE MINIMUM PERFORMANCE STANDARDS. EQUIVALENT PRODUCTS MAY BE USED PROVIDED THEY ARE SUBMITTED TO ENGINEER OF RECORD FOR APPROVAL.

PIPING PLAN LEGEND	
SYMBOL/LINE	DESCRIPTION
SS	SURFACE SUCTION
RR	RECIRCULATION RETURN
MD	MAIN DRAIN SUCTION
AF	AUTOFILL
SL	SLIDE RETURN

COUNTY OF FRESNO ENVIRONMENTAL HEALTH DIVISION
1221 Fulton Street – 3rd Floor (559) 600-3357
APPROVED WITH NOTED CORRECTIONS AND SUBJECT TO FIELD INSPECTIONS
DATE: 8/26/25
BY:
APPROVAL OF THIS PLAN DOES NOT CONSTITUTE PERMISSION TO VIOLATE ANY CITY OR COUNTY ORDINANCE, OR STATE LAW, AND SHALL NOT PREVENT THIS DEPARTMENT FROM REQUIRING CORRECTION OF ERRORS OR OMISSIONS IN PLANS, SPECIFICATIONS OR CONSTRUCTION.

TEACHING POOL PIPING PLAN
3/8" = 1'-0"
1

AGD ARCHITECTURE | DESIGN
ANDREW GOODWIN DESIGNS
1238 MONTEREY STREET
SAN LUIS OBISPO, CA 93422
t: (805) 439-1611
www.andrewgoodwin.us

RSM Design | Engineering
ROGERS STRINGER MCCLELLAND
1981 N. BROADWAY, SUITE 202
WALNUT CREEK, CA 94596
PH. (925) 217-6619
www.rsm-de.com

These drawings are instruments of service and are the property of Andrew Goodwin Designs, Inc. The information represented on these drawings are exclusively for the project indicated and shall not be transferred or otherwise reproduced without express written permission of Andrew Goodwin. Copyright 2023

SEAL

NOT FOR CONSTRUCTION

PROJECT

TRANQUILLITY HIGH SCHOOL
AQUATIC CENTER MODERNIZATION
6052 Juanche Ave,
Tranquillity, CA 93668

CLIENT

GOLDEN PLAINS UNIFIED SCHOOL DISTRICT

SHEET TITLE

TEACHING POOL PIPING PLAN

PHASE DESCRIPTION
100% CD FCHD APPROVAL SWIMMING POOL

DATE: 8/26/2025
TECHNICIAN: RD
PROJECT MANAGER: BR
JOB NUMBER: 791

SHEET NUMBER
SP3.2-1

PLOT DATE: 4/24/2025 3:26:20 PM

Copyright © **2025** RSM, Inc.-All Rights Reserved-This document was prepared for use only by the client, only for the purposes stated, and within a reasonable time from issuance. Non-commercial, educational, and scientific use of this document by regulatory agencies is regarded as a "fair use" and not a violation of copyright. Regulatory agencies may make additional copies of this document for internal use. Copies may also be made available to the public as required by law. The reprint must acknowledge the copyright and indicate that permission to reprint has been received.

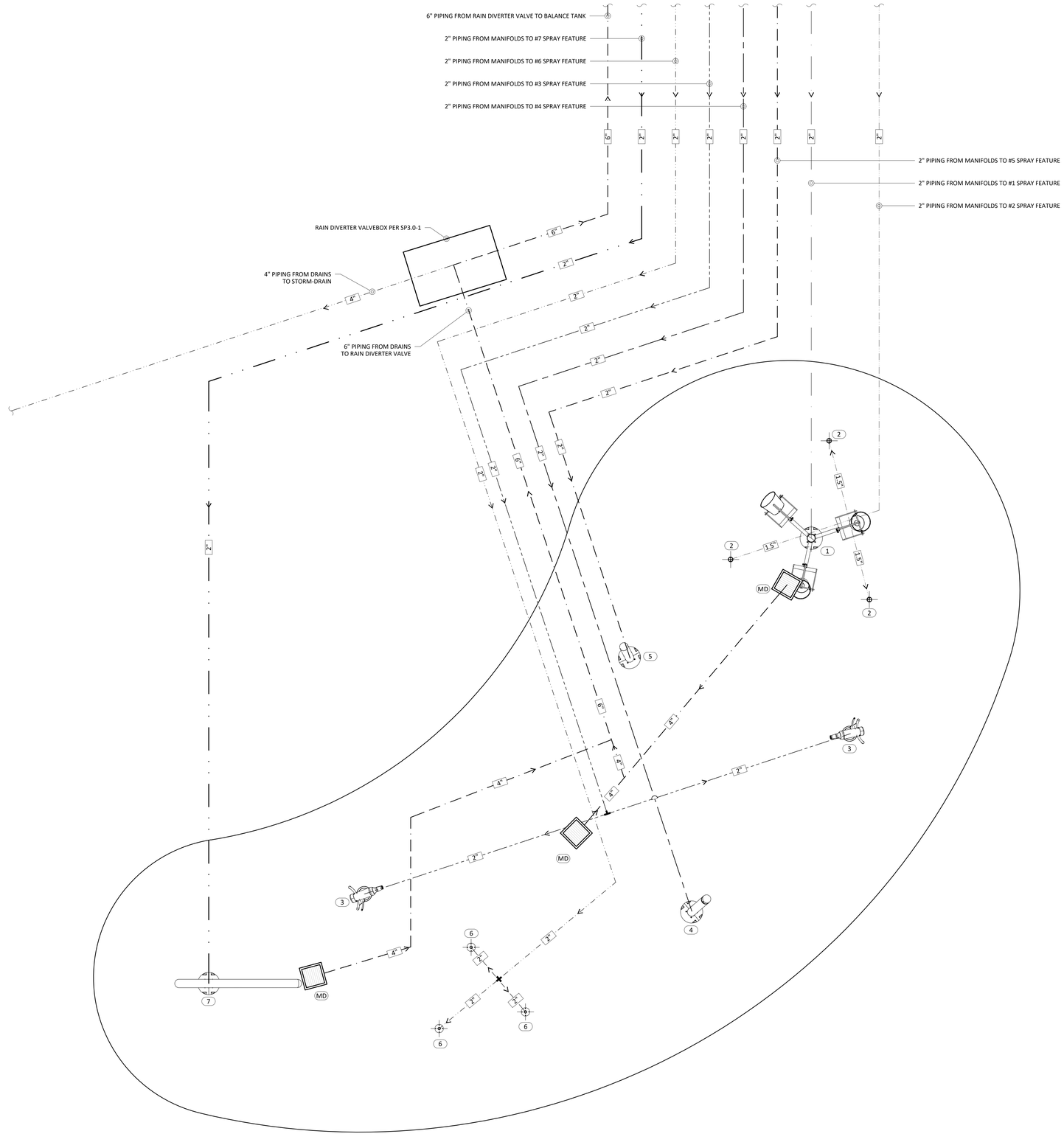

SPLASH PAD POOL PIPING NOTES:

1. SCHEDULE 80 PVC.
2. POOL CONTRACTOR SHALL INSTALL PIPING IN AN EFFICIENT MANNER TO REDUCE PRESSURE LOSSES.
3. PIPING SHALL BE INSTALLED WITHOUT AIR ENTRAPPING HIGH POINTS OR REVERSE SLOPES, I.E. ON DISCHARGE LINES, NO DESCENDING RUNS BEYOND HORIZONTAL OR ASCENDING RUNS; ON SUCTION LINES, NO DESCENDING RUNS BEYOND ASCENDING RUNS.
4. ALL UNDERGROUND PRESSURE AND SUCTION PIPING SHALL SLOPE A MINIMUM OF 1%.
5. THE TEE FEEDING FROM THE COMMON LINE BETWEEN THE SUCTION OUTLETS, TO THE PUMP(S) SHALL BE LOCATED APPROXIMATELY MIDWAY BETWEEN THE OUTLETS (ANSI/APSP-7).
6. ALL POOL RELATED PIPING, SHALL BE HYDRAULICALLY PRESSURE TESTED (WITH WATER, NOT AIR) TO A PRESSURE OF NOT LESS THAN 80 PSI FOR A PERIOD OF NO LESS THAN ONE (1) HOUR. CONTRACTOR IS RESPONSIBLE FOR THE MAINTENANCE OF A SUSTAINED 30 PSI PRESSURE ON ALL POOL RELATED PIPING THROUGHOUT THE COURSE OF CONSTRUCTION.
7. ALL DRAIN FITTINGS TO CARRY 100% OF RECIRCULATION RATE NOT TO EXCEED MAX RATED FLOW RATE FOR SELECTED DRAIN FITTING WHEN ONE OUTLET FITTING IS COVERED.
8. MAIN DRAIN PIPING SHALL CARRY 100% OF RECIRCULATION RATE AT A VELOCITY NOT TO EXCEED 6' PER SECOND.
9. ALL PIPING DESIGNED FOR 6' PER SECOND MAXIMUM SUCTION, 8' PER SECOND MAXIMUM PRESSURE, AND 3' PER SECOND MAXIMUM GRAVITY.
10. VERIFY PIPE SIZES WITH THE EQUIPMENT ROOM PLAN AND SCHEMATIC. IF THERE ARE ANY DISCREPANCIES, REPORT THEM TO THE ARCHITECT/ENGINEER IMMEDIATELY.
11. POOL CONTRACTOR SHALL COORDINATE ALL WORK WITH ARCHITECTURAL, MECHANICAL, ELECTRICAL AND STRUCTURAL DRAWINGS.
12. OVERALL PIPING IS SHOWN IN DIAGRAMMATIC FORM TO INDICATE WORK TO BE DONE RATHER THAN TO SHOW EXACT ROUTING & LOCATION. MAKE USE OF ALL DATA IN CONTRACT DOCUMENTS, VERIFY AGAINST DEVELOPED FIELD CONDITIONS, & INSTALL WORK IN AN ORDERLY ARRANGEMENT IN A MANNER TO OVERCOME STRUCTURAL, MECHANICAL & ELECTRICAL INTERFERENCE.

SPLASH PAD FEATURE SCHEDULE

CALL OUT	SPRAYTOY	QUANTITY	GPM
1	TIPPY BUCKET - 3-WAY_TRE-TB3	1	30 GPM
2	DIRECTIONAL JET-POP_FM-DJ	3	5 GPM (EACH)
3	PEDESTAL BLASTER_GND-PBT	2	20 GPM (EACH)
4	WATER DOME_BOL-WD	1	40 GPM
5	RADIAL JET BOLLARD_BOL-RJ	1	3O GPM
6	GUSHER DECK JET_FM-GJ	3	20 GPM (EACH)
7	BLADE SPRAY DOWN JETS_GND-BSD	1	20 GPM
	TOTAL	12	235 GPM

SPLASHPAD RECIRCULATION EQUIPMENT SCHEDULE

CALL OUT	EQUIPMENT	MODEL/DESCRIPTION	DETAIL
MD	MAIN DRAIN	RAINDECK 11"X11" BOX DRAIN - 4" PVC CONNECTION RD437	1/SP3.6

COUNTY OF FRESNO ENVIRONMENTAL HEALTH DIVISION
1221 Fulton Street - 3rd Floor (559) 600-3357
APPROVED
WITH NOTED CORRECTIONS AND
SUBJECT TO FIELD INSPECTIONS
BY: _____ DATE: 8/26/25
APPROVAL OF THIS PLAN DOES NOT CONSTITUTE PERMISSION TO VIOLATE ANY APPLICABLE CITY OR COUNTY ORDINANCE OR STATE LAW AND SHALL NOT PREVENT THIS DEPARTMENT FROM REQUIRING CORRECTION OF ERRORS OR OMISSIONS IN PLANS, SPECIFICATIONS OR CONSTRUCTION.

SPLASH PAD PIPING PLAN
1/2" = 1'-0"
1

AGD
ARCHITECTURE | DESIGN

ANDREW GOODWIN DESIGNS
1238 MONTEREY STREET
SAN LUIS OBISPO, CA 93422
t: (805) 439-1611
www.andrewgoodwin.us

RSM
Design | Engineering
ROGERS STRINGER MCCLELLAND
1981 N. BROADWAY, SUITE 202
WALNUT CREEK, CA 94596
PH. (925) 217-6619
www.rsm-de.com

These drawings are instruments of service and are the property of Andrew Goodwin Designs, Inc. The information represented on these drawings are exclusively for the project indicated and shall not be transferred or otherwise reproduced without express written permission of Andrew Goodwin. Copyright 2023

SEAL

NOT FOR CONSTRUCTION

PROJECT

TRANQUILLITY HIGH SCHOOL
AQUATIC CENTER MODERNIZATION
6052 Juanche Ave,
Tranquillity, CA 93668

CLIENT

GOLDEN PLAINS UNIFIED SCHOOL DISTRICT

SHEET TITLE

SPLASH PAD PIPING PLAN

PHASE DESCRIPTION
100% CD FCHD APPROVAL
SWIMMING POOL

DATE: 8/26/2025
TECHNICIAN: RD
PROJECT MANAGER: BR
JOB NUMBER: 791

SHEET NUMBER
SP3.3-1

PLOT DATE: 4/24/2025 3:26:20 PM

Copyright © **2025** RSM, Inc.-All Rights Reserved-This document was prepared for use only by the client, only for the purposes stated, and within a reasonable time from issuance. Non-commercial, educational, and scientific use of this document by regulatory agencies is regarded as a "fair use" and not a violation of copyright. Regulatory agencies may make additional copies of this document for internal use. Copies may also be made available to the public as required by law. The reprint must acknowledge the copyright and indicate that permission to reprint has been received.

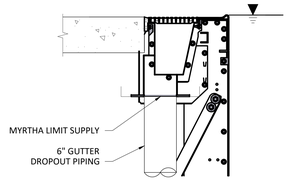

COMPETITION POOL GUTTER DROPOUT 4
1" = 1'-0"

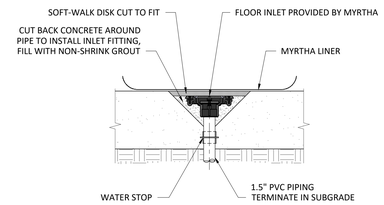

DRAIN UNDER MEMBRANE 6
3/4" = 1'-0"

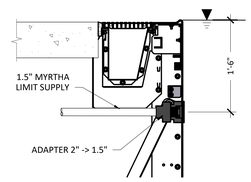

COMPETITION POOL WALL RETURN INLET 3
1" = 1'-0"

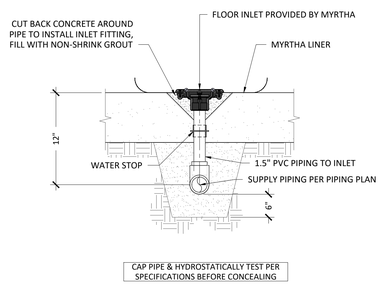

FLOOR RETURN INLET 5
N.T.S.

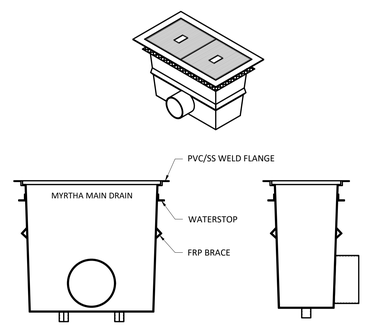

NOTE:
REFER TO SP3.1 FOR MAIN DRAIN MODEL SIZING.

COMPETITION POOL MAIN DRAIN FLANGE 2
3/4" = 1'-0"

SUMP & GRATE NOTES:
1. CONFIRM THAT MAIN DRAIN COVER APPROVED FLOW RATE IS EQUAL TO OR GREATER THAN MAXIMUM PUMP FLOW RATE.
2. CONFIRM SIDE ENTRY OR BOTTOM ENTRY FOR SUCTION OUTLET PIPING PRIOR TO INSTALLATION / CONSTRUCTION OF OUTLET PIPING, TRENCHES, POOL BOTTOM, ETC.
3. CONTRACTOR TO VERIFY VGB COMPLIANCE ON CDPH AB1020 COMPLIANCE FORM PER HEALTH & SAFETY CODE SECTION 116064.2
4. SUCTION OUTLET FITTING ASSEMBLIES MUST BE TESTED, CERTIFIED AND LABELED PER APSP-16 2017.

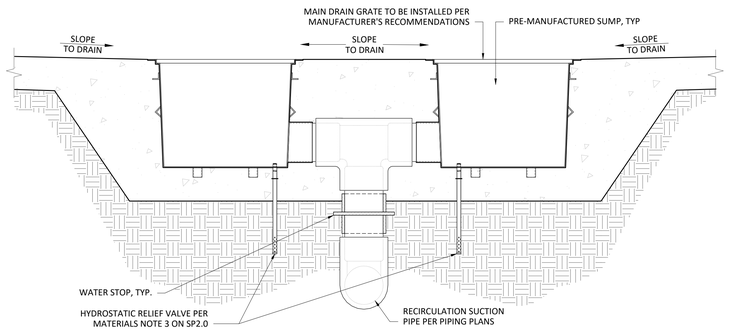

COMPETITION POOL MAIN DRAIN 1
3/4" = 1'-0"

AGD
ARCHITECTURE | DESIGN

ANDREW GOODWIN DESIGNS
1238 MONTEREY STREET
SAN LUIS OBISPO, CA 93422
t: (805) 439-1611
www.andrewgoodwin.us

RSM
Design | Engineering
ROGERS STRINGER MCCLELLAND
1981 N. BROADWAY, SUITE 202
WALNUT CREEK, CA 94596
PH. (925) 217-6619
www.rsm-de.com

These drawings are instruments of service and are the property of Andrew Goodwin Designs, Inc. The information represented on these drawings are exclusively for the project indicated and shall not be transferred or otherwise reproduced without express written permission of Andrew Goodwin.
Copyright 2023

SEAL

NOT FOR CONSTRUCTION
8/26/25

PROJECT

TRANQUILLITY HIGH SCHOOL
AQUATIC CENTER MODERNIZATION
6052 Juanche Ave,
Tranquillity, CA 93668

CLIENT

GOLDEN PLAINS UNIFIED SCHOOL DISTRICT

COUNTY OF FRESNO ENVIRONMENTAL HEALTH DIVISION
1221 Fulton Street – 3rd Floor (559) 600-3357
APPROVED
WITH NOTED CORRECTIONS AND
SUBJECT TO FIELD INSPECTIONS
BY: DATE: 8/26/25
APPROVAL OF THIS PLAN DOES NOT CONSTITUTE PERMISSION TO VIOLATE ANY APPLICABLE CITY OR COUNTY ORDINANCE, OR STATE LAW, AND SHALL NOT PRECLUDE THE DEPARTMENT FROM REQUIRING CORRECTION OF ERRORS OR OMISSIONS IN PLANS, SPECIFICATIONS OR CONSTRUCTION.

SHEET TITLE

COMPETITION POOL PIPING DETAILS

PHASE DESCRIPTION
100% CD FCHD APPROVAL
SWIMMING POOL

DATE: 8/26/2025
TECHNICIAN: RD
PROJECT MANAGER: BR
JOB NUMBER: 791

SHEET NUMBER
SP3.4-1

PLOT DATE: 4/24/2025 3:26:20 PM

Copyright © **2025** RSM, Inc.-All Rights Reserved-This document was prepared for use only by the client, only for the purposes stated, and within a reasonable time from issuance. Non-commercial, educational, and scientific use of this document by regulatory agencies is regarded as a "fair use" and not a violation of copyright. Regulatory agencies may make additional copies of this document for internal use. Copies may also be made available to the public as required by law. The reprint must acknowledge the copyright and indicate that permission to reprint has been received.

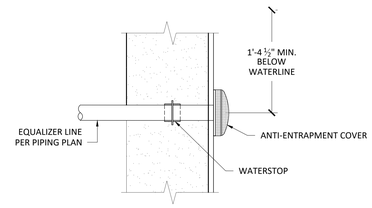

NOTE:
FINAL LOCATION OF AUTOFILL EQUALIZER LINE TO BE COORDINATED ONSITE WITH MYRTHA PANEL.

TEACHING POOL AUTOFILL EQUALIZER
3/4" = 1'-0" (8)

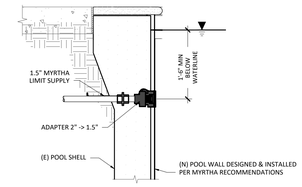

NOTE: BOND & GROUND PER CEC

WALL INLET
3/4" = 1'-0" (4)

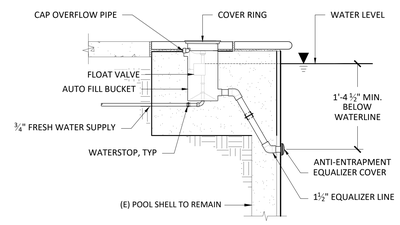

NOTE:
FINAL LOCATION OF AUTOFILL EQUALIZER LINE TO BE COORDINATED ONSITE WITH MYRTHA PANEL.

TEACHING POOL AUTOFILL DECK WELL
3/4" = 1'-0" (7)

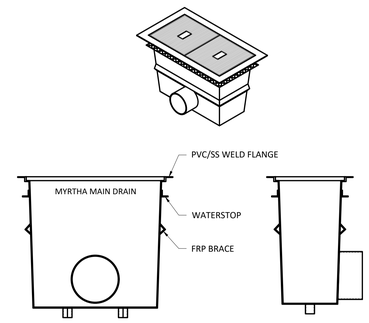

NOTE:
REFER TO SP3.2 FOR MAIN DRAIN MODEL SIZING.

TEACHING POOL MAIN DRAIN FLANGE
3/4" = 1'-0" (3)

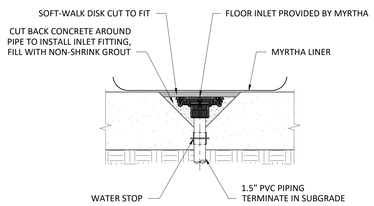

DRAIN UNDER MEMBRANE
3/4" = 1'-0" (10)

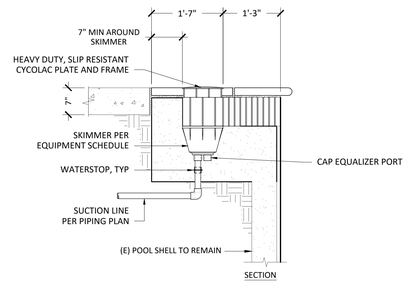

TEACHING POOL SKIMMER
3/4" = 1'-0" (6)

SUMP & GRATE NOTES:
1. CONFIRM THAT MAIN DRAIN COVER APPROVED FLOW RATE IS EQUAL TO OR GREATER THAN MAXIMUM PUMP FLOW RATE.
2. CONFIRM SIDE ENTRY OR BOTTOM ENTRY FOR SUCTION OUTLET PIPING PRIOR TO INSTALLATION / CONSTRUCTION OF OUTLET PIPING, TRENCHES, POOL BOTTOM, ETC.
3. CONTRACTOR TO VERIFY VGB COMPLIANCE ON CDPH AB1020 COMPLIANCE FORM PER HEALTH & SAFETY CODE SECTION 116064.2
4. SUCTION OUTLET FITTING ASSEMBLIES MUST BE TESTED, CERTIFIED AND LABELED PER APSP-16 2017.

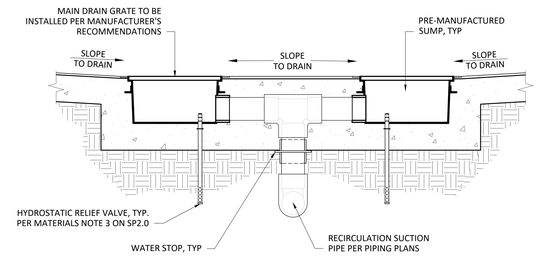

TEACHING POOL SLIDE RECIRCULATION MAIN DRAIN
3/4" = 1'-0" (2)

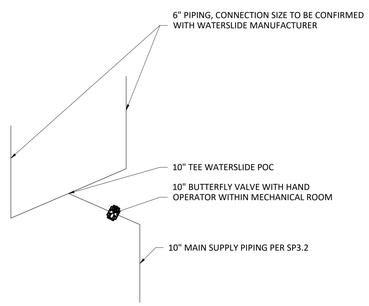

WATERSLIDE CONNECTION
NOT TO SCALE (9)

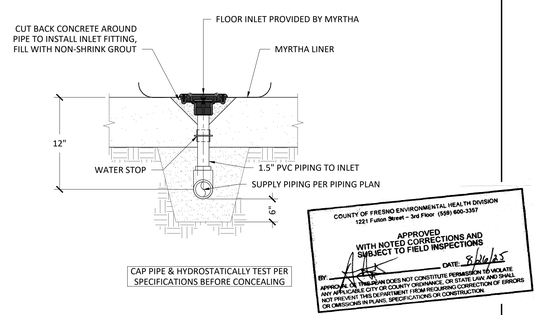

CAP PIPE & HYDROSTATICALLY TEST PER SPECIFICATIONS BEFORE CONCEALING

COUNTY OF FRESNO ENVIRONMENTAL HEALTH DIVISION
1221 Fulton Street – 3rd Floor (559) 600-3357
APPROVED
WITH NOTED CORRECTIONS AND
SUBJECT TO FIELD INSPECTIONS
BY: DATE: 8/26/25
APPROVAL OF THIS PLAN DOES NOT CONSTITUTE PERMISSION TO VIOLATE ANY APPLICABLE CITY OR COUNTY ORDINANCE OR STATE LAW, AND SHALL NOT PREVENT THIS DEPARTMENT FROM REQUIRING CORRECTION OF ERRORS OR OMISSIONS IN PLANS, SPECIFICATIONS OR CONSTRUCTION

FLOOR RETURN INLET
N.T.S. (5)

SUMP & GRATE NOTES:
1. CONFIRM THAT MAIN DRAIN COVER APPROVED FLOW RATE IS EQUAL TO OR GREATER THAN MAXIMUM PUMP FLOW RATE.
2. CONFIRM SIDE ENTRY OR BOTTOM ENTRY FOR SUCTION OUTLET PIPING PRIOR TO INSTALLATION / CONSTRUCTION OF OUTLET PIPING, TRENCHES, POOL BOTTOM, ETC.
3. CONTRACTOR TO VERIFY VGB COMPLIANCE ON CDPH AB1020 COMPLIANCE FORM PER HEALTH & SAFETY CODE SECTION 116064.2
4. SUCTION OUTLET FITTING ASSEMBLIES MUST BE TESTED, CERTIFIED AND LABELED PER APSP-16 2017.

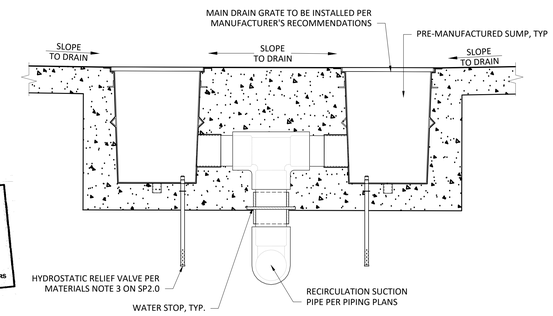

TEACHING POOL RECIRCULATION MAIN DRAIN
3/4" = 1'-0" (1)

AGD
ARCHITECTURE | DESIGN

ANDREW GOODWIN DESIGNS
1238 MONTEREY STREET
SAN LUIS OBISPO, CA 93422
t: (805) 439-1611
www.andrewgoodwin.us

RSM
Design | Engineering
ROGERS STRINGER MCCLELLAND
1981 N. BROADWAY, SUITE 202
WALNUT CREEK, CA 94596
PH. (925) 217-6619
www.rsm-de.com

These drawings are instruments of service and are the property of Andrew Goodwin Designs, Inc. The information represented on these drawings are exclusively for the project indicated and shall not be transferred or otherwise reproduced without express written permission of Andrew Goodwin. Copyright 2023

SEAL

NOT FOR CONSTRUCTION
8/26/25

PROJECT

TRANQUILLITY HIGH SCHOOL
AQUATIC CENTER MODERNIZATION
6052 Juanche Ave,
Tranquillity, CA 93668

CLIENT

GOLDEN PLAINS UNIFIED SCHOOL DISTRICT

SHEET TITLE

TEACHING POOL PIPING DETAILS

PHASE DESCRIPTION
100% CD FCHD APPROVAL SWIMMING POOL

DATE: 8/26/2025
TECHNICIAN: RD
PROJECT MANAGER: BR
JOB NUMBER: 791

SHEET NUMBER
SP3.5-1

PLOT DATE: 4/24/2025 3:26:20 PM

Copyright © **2025** RSM, Inc.-All Rights Reserved-This document was prepared for use only by the client, only for the purposes stated, and within a reasonable time from issuance. Non-commercial, educational, and scientific use of this document by regulatory agencies is regarded as a "fair use" and not a violation of copyright. Regulatory agencies may make additional copies of this document for internal use. Copies may also be made available to the public as required by law. The reprint must acknowledge the copyright and indicate that permission to reprint has been received.

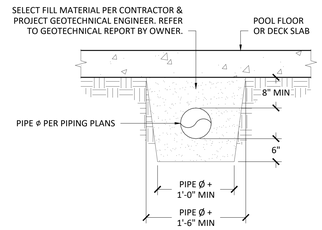

TYP. BELOW GRADE PIPING
3/4" = 1'-0"
4

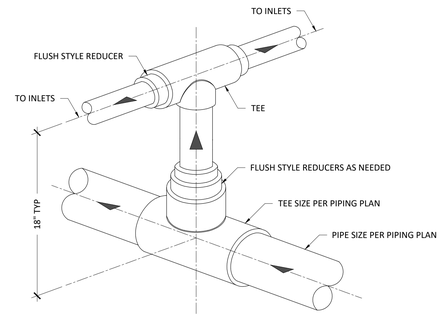

TYP. PIPE CONNECTIONS
3/4" = 1'-0"
3

SCHEDULE 80 PVC			
PIPE SIZE PØ	A	B	C
1.5"	2.375"	2.875"	5"
2"	2.875"	3.125"	6"
2.5"	3.5"	3.75"	7"
3"	4.125"	4.75"	7.5"
4"	5.25"	4.25"	9"
6"	7.50"	6.375"	11"
8"	9.75"	8.25"	13.5"
10"	12"	10.25"	16"
12"	14.25"	12.375"	19"
14"	15.625"	14.5"	22"

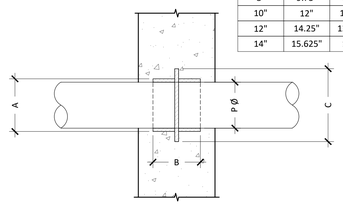

TYP. WATER STOP
3/4" = 1'-0"
2

SUMP & GRATE NOTES:
1. CONFIRM SIDE ENTRY OR BOTTOM ENTRY FOR SUCTION OUTLET PIPING PRIOR TO INSTALLATION / CONSTRUCTION OF OUTLET PIPING, TRENCHES, POOL BOTTOM, ETC.

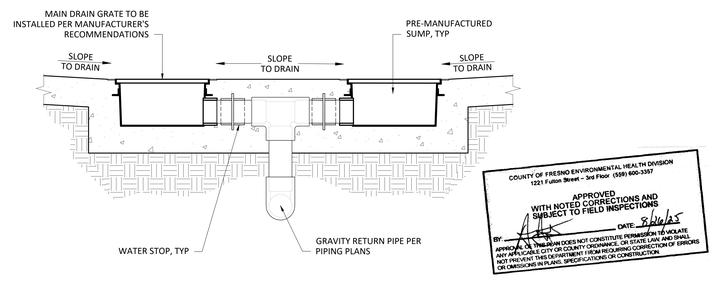

SPLASHPAD DRAINS
3/4" = 1'-0"
1

AGD
ARCHITECTURE | DESIGN

ANDREW GOODWIN DESIGNS
1238 MONTEREY STREET
SAN LUIS OBISPO, CA 93422
t: (805) 439-1611
www.andrewgoodwin.us

RSM
Design | Engineering
ROGERS STRINGER MCCLELLAND
1981 N. BROADWAY, SUITE 202
WALNUT CREEK, CA 94596
PH. (925) 217-6619
www.rsm-de.com

These drawings are instruments of service and are the property of Andrew Goodwin Designs, Inc. The information represented on these drawings are exclusively for the project indicated and shall not be transferred or otherwise reproduced without express written permission of Andrew Goodwin.
Copyright 2023

SEAL

PROJECT

TRANQUILLITY HIGH SCHOOL
AQUATIC CENTER MODERNIZATION
6052 Juanche Ave,
Tranquillity, CA 93668

CLIENT

GOLDEN PLAINS UNIFIED SCHOOL DISTRICT

SHEET TITLE

SPLASHPAD/TYP. PIPING DETAILS

PHASE DESCRIPTION
100% CD FCHD APPROVAL SWIMMING POOL

DATE: 8/26/2025
TECHNICIAN: RD
PROJECT MANAGER: BR
JOB NUMBER: 791

SHEET NUMBER
SP3.6-1

PLOT DATE: 4/24/2025 3:26:20 PM

Copyright © **2025** RSM, Inc.-All Rights Reserved-This document was prepared for use only by the client, only for the purposes stated, and within a reasonable time from issuance. Non-commercial, educational, and scientific use of this document by regulatory agencies is regarded as a "fair use" and not a violation of copyright. Regulatory agencies may make additional copies of this document for internal use. Copies may also be made available to the public as required by law. The reprint must acknowledge the copyright and indicate that permission to reprint has been received.

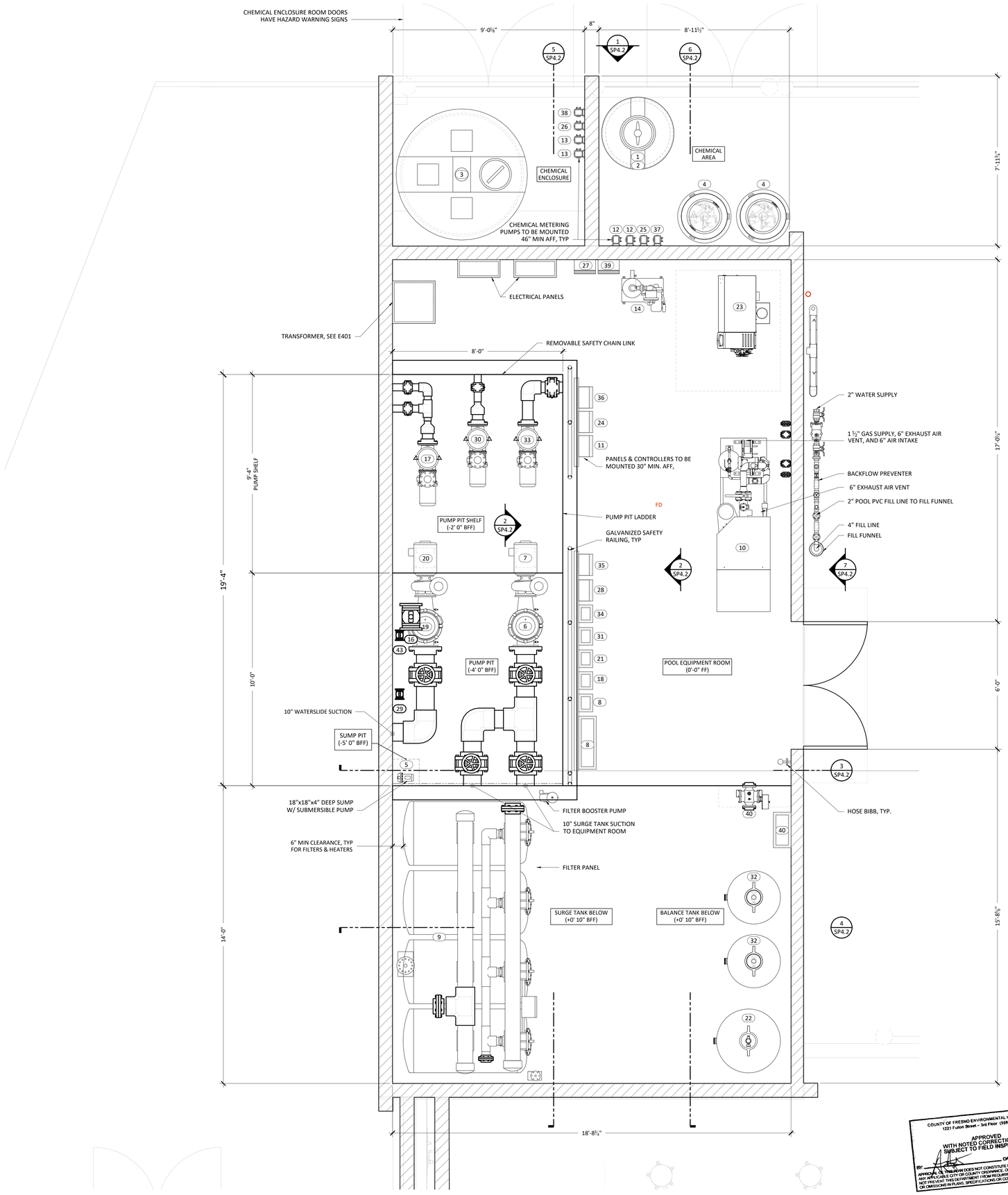

COUNTY OF FRESNO ENVIRONMENTAL HEALTH DIVISION
1221 Fulton Street - 3rd Floor (559) 600-3357
APPROVED WITH NOTED CORRECTIONS AND SUBJECT TO FIELD INSPECTIONS
BY _____ DATE 8/26/25
APPROVAL THEREUNDER DOES NOT CONSTITUTE PERMISSION TO VIOLATE ANY APPLICABLE CITY OR COUNTY ORDINANCE, OR CORRECTION OF ERRORS NOT PREVENT THIS DEPARTMENT FROM REQUIRING CORRECTION OF ERRORS OR OMISSIONS IN PLANS, SPECIFICATIONS OR CONSTRUCTION.

EQUIPMENT ROOM NOTES:

1. SEE PIPING PLANS TO VERIFY PIPE SIZES AND FOR CONTINUATION OF PIPING. REPORT DISCREPANCIES IMMEDIATELY TO THE ARCHITECT / ENGINEER.
2. POOL CONTRACTOR SHALL IDENTIFY ALL PIPING AND VALVES BY COLOR CODING OR LABELS AND DIRECTION OF FLOW ARROWS IN ACCORDANCE WITH LOCAL HEALTH CODE.
3. PIPING AT HEATER TO BE CPVC UNLESS NOTED OTHERWISE.
4. TAPERED REDUCER FITTINGS SHALL BE USED WHERE PIPE SIZES CHANGE.
5. DOWNSIZING AND UPSIZING IS TO BE DONE AT THE THROATS OF THE PUMP PORTS.
6. ALL VALVES SHALL HAVE A MINIMUM PRESSURE RATING OF 125 PSI.
7. ALL TRADES SHALL KEEP SPACE ABOVE THE FILTRATION AND CHEMICAL EQUIPMENT CLEAR FOR SERVICING.
8. HAIR AND LINT STRAINER OPENINGS SHALL BE NO MORE THAN 1/8". THE HAIR AND UNIT STRAINER MUST PROVIDE A FREE FLOW CAPACITY OF AT LEAST FOUR TIMES THE AREA OF THE PUMP SUCTION LINE.
9. FILTRATION AND CHEMICAL EQUIPMENT SHALL BE NATIONAL SANITATION FOUNDATION (NSF) APPROVED.
10. FILTER SHALL BE PROVIDED WITH THE FOLLOWING APPROPRIATELY LOCATED ACCESSORIES: INFLUENT AND EFFLUENT PRESSURE GAUGES, BACKWASH SIGHT GLASS ON WASTED DISCHARGE LINE, FILTER BACKWASH VALVE.
11. FLOWMETER SHALL BE PROVIDED IN THE INLET RETURN LINE AFTER FILTER AND BEFORE CHEMICAL INJECTION. INSTALL ON A STRAIGHT LENGTH OF PIPE AT A DISTANCE OF AT LEAST 10 PIPE DIAMETERS DOWNSTREAM AND 4 PIPE DIAMETERS UPSTREAM FROM ANY VALVE, ELBOW OR OTHER SOURCE OF TURBULENCE OR PER MANUFACTURER'S SPECIFICATIONS. PROVIDE CHECK VALVE IN RETURN LINE UPSTREAM OF CHEMICAL INJECTION TO PROTECT HEATER, FILTER, PUMP AND OTHER EQUIPMENT.
12. PROVIDE A COMBINATION VACUUM/PRESSURE GAUGE (COMPOUND GAUGE) ON THE SUCTION SIDE OF THE CIRCULATION PUMP AND A CHECK VALVE ON THE DISCHARGE SIDE OF THE PUMP.
13. INSTALL AIR COMBUSTION INTAKE AND VENT PIPING PER HEATER MANUFACTURER'S RECOMMENDATIONS.
14. ALL PIPING TO BE SUPPORTED AS REQUIRED WITH EITHER HANGERS (ALONG CEILINGS), ANCHORS (ALONG WALLS), OR SUPPORTS (ALONG FLOOR) PER CONTRACTOR. MIN 6'-8" CLEARANCE TO UNDERSIDE OF ANY OVERHEAD PLUMBING LINES.
15. ANY WALL-MOUNTED EQUIPMENT AND CONTROL PANELS SHALL BE MOUNTED A MINIMUM 46" ABOVE FINISHED FLOOR.
16. HOUSEKEEPING PADS: ALL CIRCULATION PUMPS, HEATERS, AND FILTERS TO BE ANCHORED PER MANUFACTURER'S RECOMMENDATIONS ON A HOUSEKEEPING PAD THAT IS 4" MINIMUM ABOVE FINISHED FLOOR.
17. ALL MECHANICAL ROOM FLOORS SHALL SLOPE A MINIMUM OF ¼" TO ½" TO FLOOR DRAINS.
18. MECHANICAL ROOM FLOOR DRAINS BY OTHERS.
19. HOSE BIBS TO BE INSTALLED FOR HOUSE CLEANING PURPOSES. HOSE BIBS TO BE PROVIDED WITH ATMOSPHERIC VACUUM BREAKERS.
20. BACKWASH CATCH BASIN SURFACES SHALL BE WATERPROOFED.
21. THE FOLLOWING INFORMATION SHALL BE LAMINATED AND POSTED IN THE POOL MECHANICAL ROOM: BACKWASH PROCEDURES, POOL FILLING AND DRAINING, VALVE REFERENCE CHART, EQUIPMENT ROOM PLAN, POOL PIPING SCHEMATICS, AND POOL SYSTEMS SCHEMATICS.
22. PIPING NOT SHOWN TO SCALE, SHOWN TO INDICATE WORK TO BE DONE AND SUGGESTED ROUTING RATHER THAN EXACT ROUTING & LOCATION. MAKE USE OF ALL DATA IN CONTRACT DOCUMENTS, VERIFY AGAINST DEVELOPED FIELD CONDITIONS, & INSTALL WORK IN AN ORDERLY ARRANGEMENT IN A MANNER TO OVERCOME STRUCTURAL, MECHANICAL & ELECTRICAL INTERFERENCE.
23. PIPING VALVES NOT SHOWN, SEE CIRCULATION SCHEMATICS FOR VALVES REQUIRED, LOCATIONS, AND SPECIFICATIONS.
24. INSTALL INTERLOCK BETWEEN CIRCULATION PUMP(S) AND HEATER(S); FLOW SWITCHES; AND BYPASS LOOPS AS REQUIRED BY HEATER MANUFACTURER.
25. PUMP SHALL INTERLOCK WITH CHEMICAL CONTROLLER. DISRUPTION OF POWER TO CIRCULATION PUMP SHALL SHUT OFF CHEMICAL FEED SYSTEMS VIA CHEMICAL CONTROLLER.
26. CONTRACTOR TO VERIFY ALL PIPE PENETRATION ELEVATIONS PRIOR TO CONCRETE PLACEMENT.

EQUIPMENT ROOM SCHEDULE

COMMON/SHARED EQUIPMENT

CALL OUT	EQUIPMENT	MODEL/DESCRIPTION	SIZE	WEIGHT	ANCHOR DETAIL
1	ACID STORAGE	CHEMTAINER TC5256DC, DOUBLE WALLED BULK STORAGE TANK, 350 GALLON CAPACITY, 52" DIAMETER, 56" HEIGHT W/PROMINENT ACID FUME SCRUBBER	52" D 57" H	1750	6/SP4.8
2	ACID VAPOR PROTECTION	EKO3 ACID VAPOR RECOVERY SYSTEM INCLUDING CUSTOM 55 GALLON SEALED ACID NEUTRALIZATION TANK	26" D 36" H	250	6/SP4.8
3	CHLORINE STORAGE	CHEMTAINER TC6481DC, DOUBLE WALLED BULK STORAGE TANK, 1000 GALLON CAPACITY, 64" DIAMETER, 81" HEIGHT	74" D 85" H	5000	6/SP4.8
4	CO2 STORAGE	(2) TAYLOR WHARTON NOVO-750, CO2 CRYOGENIC STORAGE TANK, 750 LB CAPACITY, 26" DIAMETER, EPOXY COATED, W/ REMOTE FILL STATION	26" D x 71" H	1050	8/SP4.8
5	SUMP PUMP	GOULDS SUBMERSIBLE SUMP PUMP LSP03av, 1/3 HP, 1 PHASE, 60 HZ, 3450 RPM, W/ PIGGYBACK VERTICAL FLOAT SWITCH, 1-1/2" DISCHARGE	18" x 12" x 14"	40	NA

COMPETITION POOL EQUIPMENT

CALL OUT	EQUIPMENT	MODEL/DESCRIPTION	SIZE	WEIGHT	ANCHOR DETAIL
6	STRAINER	AQUIFY FIBERGLASS 10" TO 6" REDUCING HAIR AND LINT STRAINER WITH (2) STAINLESS STEEL BASKETS	22"x32"	85	NA
7	CIRCULATION PUMP	PACO 50957 LC, HORIZONTAL CLOSE COUPLED END SUCTION, 20 HP, 3 PHASE, TEFC, 1760 RPM, 1000 GPM @ 60' TDH, 6" SUCTION, 5" DISCHARGE, IMPELLER RATED 8.65" DIAMETER, 83% EFFICIENCY, 60 HZ, 460V THREE PHASE. NEMA PREMIUM EFFICIENTY MOTOR	10"x12"x12"	650	3/SP4.8
8	VARIABLE FREQUENCY DRIVE	SMART PUMP CONTROL SYSTEM (SPCS) SPCS020-04, 20 HP, 460V, WITH 36"X30"X10" CABINET	30"x30"x10"	250	2/SP4.3
9	FILTRATION	(4) TANK EPD S408, 29.50" DIAMETER X 42.25", 16.5 SQ FT FILTER AREA EACH, 66 SQ FT TOTAL, 4" BACKWASH VALVE, 297 GPM BACKWASH FLOW RATE PER TANK, W/ PRESSURE AMPLIFICATION SYSTEM	29.5" D x 42.25" H	5030	4/SP4.8
10	HEATING	LOCHINVAR AQUAS APO2000N, 1,999,000 BTUH INPUT, 3" POOL CONNECTION, 1.5" GAS CONNECTION, 8" AIR INTAKE, 8" FLUE VENT, 0.5" CW W/TOTALIZING METER 96.2% EFFICIENCY	30" x 98" x 79"	3500	5/SP4.8
11	CHEMICAL CONTROLLER	BECSYS BECS7, AUTOMATIC BACKWASH CONTROL	18" x 15" x 8"	25	NA
12	ACID METERING PUMP SYSTEM	STENNER 45M5, SINGLE HEAD, ADJUSTABLE OUTPUT, 25 PSI, MAXIMUM 50 GALLONS ACID PER DAY	5" x 6" x 10"	10	NA
13	CHLORINE METERING PUMP SYSTEM	STENNER 85M5, SINGLE HEAD, ADJUSTABLE OUTPUT, 25 PSI, MAXIMUM 85 GALLONS ACID PER DAY	5" x 6" x 10"	10	NA
14	CO2 FEEDER	EKO3 PH-MTS CO2 FEED SYSTEM	24" x 24" x 48"	400	9/SP4.8
15	WATER LEVEL CONTROL	BECS SURGE TANK LEVELSENSOR (SLS) , LINKED TO THE BECSYS CHEMICAL CONTROLLER	NA	NA	NA
16	FLOW METER	GF SIGNET 2536 ROTOR-X PADDLEWHEEL FLOW SENSOR, FLOW RANGE 0.3-20 FT/S	4" x 4" x 4"	5	NA

TEACHING POOL EQUIPMENT

CALL OUT	EQUIPMENT	MODEL/DESCRIPTION	SIZE	WEIGHT	ANCHOR DETAIL
17	CIRCULATION PUMP	PENTAIR BRONZE C SERIES CHK50, 5 HP, 3 PHASE, TEFC 3450 RPM, 115 GPM @ 78' TDH, 6" SUCTION, 4" DISCHARGE,220/440V. NEMA PREMIUM EFFICIENTY MOTOR	8"x24"x18"	400	7/SP4.8
18	VARIABLE FREQUENCY DRIVE	PENTAIR ACUDRIVE XS, 5 HP, 200-230/460V, WITH NEMA 4X CABINET	10"x10"x17"	75	2/SP4.3
19	WATERSLIDE PUMP STRAINER	AQUIFY FIBERGLASS 10" TO 6" REDUCING HAIR AND LINT STRAINER WITH (2) STAINLESS STEEL BASKETS	22"x32"	85	NA
20	WATERSLIDE PUMP	PACO 50957 LC, HORIZONTAL CLOSE COUPLED END SUCTION, 15 HP, 3 PHASE, TEFC, 1760 RPM, 1000 GPM @ 40' TDH, 6" SUCTION, 5" DISCHARGE, IMPELLER RATED 8.65" DIAMETER, 83% EFFICIENCY, 60 HZ, 460V THREE PHASE. NEMA PREMIUM EFFICIENTY MOTOR	10"x12"x12"	650	3/SP4.8
21	VARIABLE FREQUENCY DRIVE	PENTAIR ACUDRIVE XS, 15 HP, 200-230/460V, WITH NEMA 4X CABINET	10"x10"x17"	75	2/SP4.3
22	FILTRATION	PENTAIR TR140C-3, 37" DIAMETER X 46", 7.06 SQ FT FILTER AREA, 3" BACKWASH VALVE, 105 GPM BACKWASH FLOW RATE PER TANK	36" D x 48" H	1000	5/SP4.8
23	HEATING	LOCHINVAR ENERGYRITE ERN402, 399,000 BTUH INPUT, 2" POOL CONNECTION, 0.75" GAS CONNECTION, 5" AIR INTAKE, 6" FLUE VENT W/DIRECTAIRE SYSTEM	26"x41"x22"	300	NA
24	CHEMICAL CONTROLLER	BECSYS BECS5, AUTOMATIC BACKWASH CONTROL	12" x 15" x 8"	25	NA
25	ACID METERING PUMP SYSTEM	STENNER 45M5, SINGLE HEAD, ADJUSTABLE OUTPUT, 25 PSI, MAXIMUM 50 GALLONS ACID PER DAY	5" x 6" x 10"	10	NA
26	CHLORINE METERING PUMP SYSTEM	STENNER 45M5, SINGLE HEAD, ADJUSTABLE OUTPUT, 25 PSI, MAXIMUM 50 GALLONS ACID PER DAY	5" x 6" x 10"	10	NA
27	CO2 FEEDER	EKO3 CO2 CONTROLLER 20-220 SCFH	6"x6"x4"	10	NA
28	WATERSLIDE CONTROLLER	PENTAIR LX820 CONTROLLER W/2 EMERGENCY STOP PUSHBUTTONS AND ALARMS	10"x10"x5"	15	2/SP4.3
29	FLOW METER	GF SIGNET 2536 ROTOR-X PADDLEWHEEL FLOW SENSOR, FLOW RANGE 0.3-20 FT/S	4" x 4" x 4"	5	NA

SPLASHPAD EQUIPMENT

CALL OUT	EQUIPMENT	MODEL/DESCRIPTION	SIZE	WEIGHT	ANCHOR DETAIL
30	BALANCE TANK CIRCULATION PUMP	PENTAIR BRONZE C SERIES CHK50, 5 HP, 3 PHASE, TEFC 3450 RPM, 135 GPM @ 75' TDH, 6" SUCTION, 4" DISCHARGE,220/440V. NEMA PREMIUM EFFICIENTY MOTOR	8"x24"x18"	400	7/SP4.8
31	VARIABLE FREQUENCY DRIVE	PENTAIR ACUDRIVE XS, 5 HP, 200-230/460V, WITH NEMA 4X CABINET	10"x10"x17"	75	2/SP4.3
32	FILTRATION	(2) PENTAIR TR100C-3, 31" DIAMETER X 40", 4.91 SQ FT FILTER AREA, 3" BACKWASH VALVE, 73 GPM BACKWASH FLOW RATE PER TANK	30" D x 42" H	700	5/SP4.8
33	FEATURE PUMP	PENTAIR BRONZE C SERIES CHK50, 5 HP, 3 PHASE, TEFC 3450 RPM, 235 GPM @ 65' TDH, 6" SUCTION, 4" DISCHARGE,220/440V. NEMA PREMIUM EFFICIENTY MOTOR	8"x24"x18"	400	7/SP4.8
34	VARIABLE FREQUENCY DRIVE	PENTAIR ACUDRIVE XS, 5 HP, 200-230/460V, WITH NEMA 4X CABINET	10"x10"x17"	75	2/SP4.3
35	SPLASHPAD CONTROLLER	PENTAIR LX802 CONTROLLER W/BUILT IN TIMER, EMERGENCY STOP PUSHBUTTON AND ALARM	10"x10"x5"	15	2/SP4.3
36	CHEMICAL CONTROLLER	BECSYS BECS5, AUTOMATIC BACKWASH CONTROL	12" x 15" x 8"	25	NA
37	ACID METERING PUMP SYSTEM	STENNER 85M4, SINGLE HEAD, ADJUSTABLE OUTPUT, 25 PSI, MAXIMUM 60 GALLONS ACID PER DAY	5" x 6" x 10"	10	NA
38	CHLORINE METERING PUMP SYSTEM	STENNER 85M3, SINGLE HEAD, ADJUSTABLE OUTPUT, 25 PSI, MAXIMUM 40 GALLONS CHLORINE PER DAY	5" x 6" x 10"	10	NA
39	CO2 FEEDER	EKO3 CO2 CONTROLLER 20-220 SCFH	6"x6"x4"	10	NA
40	UV SYSTEM	ETS WF-115-3-N, (1) 1.5KW MEDIUM PRESSURE LAMPS, 3" WATER CONNECTION, 208V, 1 PHASE, MAXIMUM 211 GPM	30"x24"x10"	125	NA
41	WATER LEVEL CONTROL	BECS SURGE TANK LEVELSENSOR (SLS) , LINKED TO THE BECSYS CHEMICAL CONTROLLER	NA	NA	NA
42	FLOW METER	GF SIGNET 2536 ROTOR-X PADDLEWHEEL FLOW SENSOR, FLOW RANGE 0.3-20 FT/S	4" x 4" x 4"	5	NA

ALL EQUIPMENT NOTED ARE BASIS OF DESIGN & DESIGNATE MINIMUM PERFORMANCE STANDARDS. EQUIVALENT PRODUCTS MAY BE USED PROVIDED THEY ARE SUBMITTED TO ENGINEER OF RECORD FOR APPROVAL.

EQUIPMENT ROOM PLAN
1/2" = 1'-0"
1

AGD ARCHITECTURE | DESIGN

ANDREW GOODWIN DESIGNS
1238 MONTEREY STREET
SAN LUIS OBISPO, CA 93422
t: (805) 439-1611
www.andrewgoodwin.us

RSM Design | Engineering
ROGERS STRINGER MCCLELLAND
1981 N. BROADWAY, SUITE 202
WALNUT CREEK, CA 94596
PH. (925) 217-6619
www.rsm-de.com

These drawings are instruments of service and are the property of Andrew Goodwin Designs, Inc. The information represented on these drawings are exclusively for the project indicated and shall not be transferred or otherwise reproduced without express written permission of Andrew Goodwin.
Copyright 2023

SEAL

NOT FOR CONSTRUCTION

PROJECT

TRANQUILLITY HIGH SCHOOL
AQUATIC CENTER MODERNIZATION
6052 Juanche Ave,
Tranquillity, CA 93668

CLIENT

GOLDEN PLAINS UNIFIED SCHOOL DISTRICT

SHEET TITLE

BUILDING P
EQUIPMENT ROOM PLAN

PHASE DESCRIPTION
100% CD FCHD APPROVAL
SWIMMING POOL

DATE: 8/26/2025
TECHNICIAN: RD
PROJECT MANAGER: BR
JOB NUMBER: 791

SHEET NUMBER
SP4.0-1

PLOT DATE: 4/24/2025 3:26:20 PM

Copyright © 2025 RSM, Inc.-All Rights Reserved-This document was prepared for use only by the client, only for the purposes stated, and within a reasonable time from issuance. Non-commercial, educational, and scientific use of this document by regulatory agencies is regarded as a "fair use" and not a violation of copyright. Regulatory agencies may make additional copies of this document for internal use. Copies may also be made available to the public as required by law. The reprint must acknowledge the copyright and indicate that permission to reprint has been received.

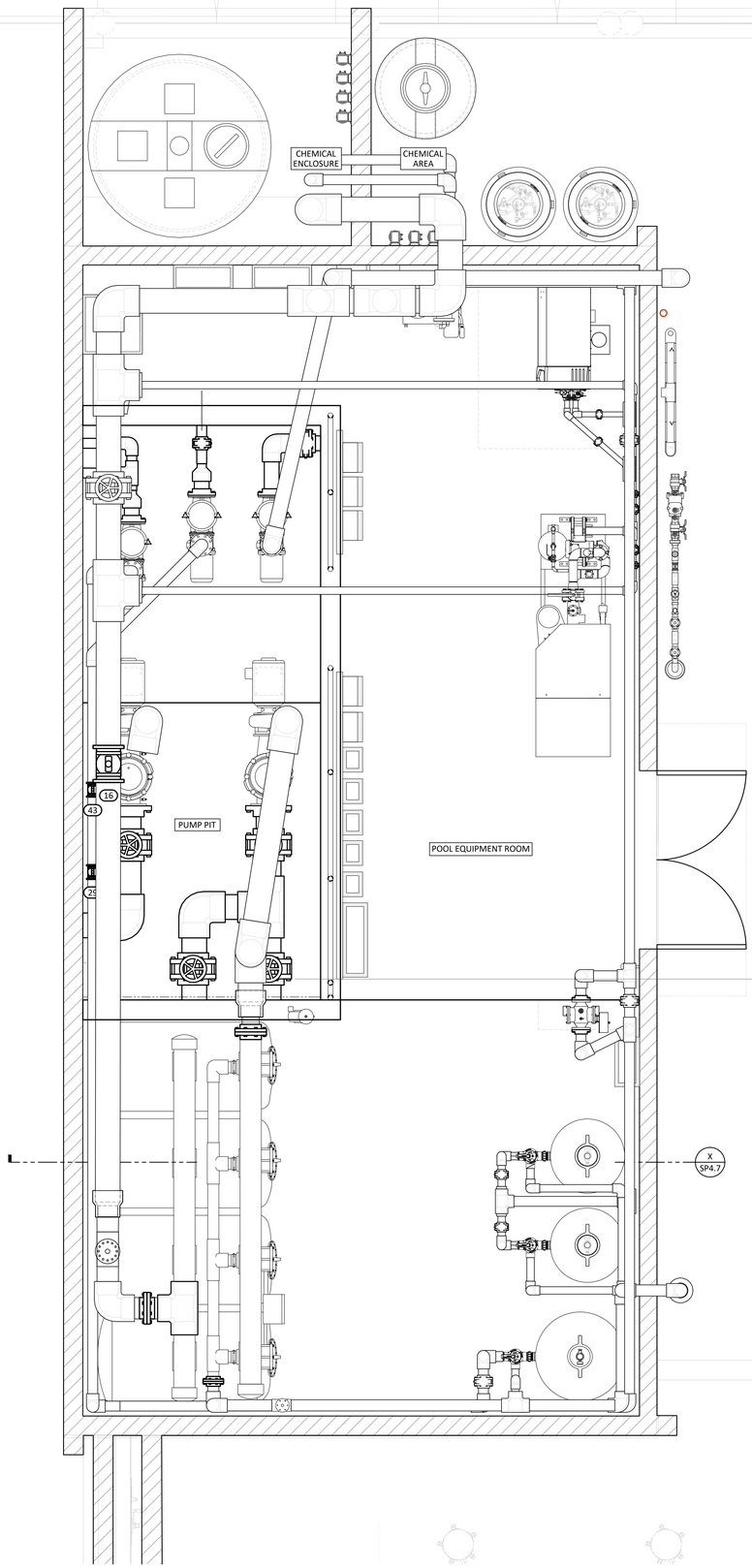

EQUIPMENT ROOM ABOVE GRADE PIPING PLAN (2)

1/2" = 1'-0"

EQUIPMENT ROOM PIPING NOTES:

1. ALL PIPING TO BE SCHEDULE 80 PVC UNLESS NOTED OTHERWISE.
2. SEE PIPING PLANS TO VERIFY PIPE SIZES AND FOR CONTINUATION OF PIPING. REPORT DISCREPANCIES IMMEDIATELY TO THE ARCHITECT / ENGINEER.
3. POOL CONTRACTOR SHALL IDENTIFY ALL PIPING AND VALVES BY COLOR CODING OR LABELS AND DIRECTION OF FLOW ARROWS IN ACCORDANCE WITH LOCAL HEALTH CODE.
4. PIPING AT HEATER TO BE CPVC UNLESS NOTED OTHERWISE.
5. REDUCER FITTINGS SHALL BE USED WHERE PIPE SIZES CHANGE.
6. NO COMMON PIPING OR FITTING ON THE SUCTION SIDE OF THE PUMP IS TO BE SMALLER THAN THE LARGEST SINGLE ELEMENT CONNECTED. DOWNSIZING AND UPSIZING IS TO BE DONE AT THE THROATS OF THE PUMP PORTS.
7. ALL PIPING TO BE SUPPORTED AS REQUIRED WITH EITHER HANGERS (ALONG CEILINGS), ANCHORS (ALONG WALLS), OR SUPPORTS (ALONG FLOOR) PER CONTRACTOR. MIN 6'-8" CLEARANCE TO UNDERSIDE OF ANY OVERHEAD PLUMBING LINES.
8. PIPING NOT SHOWN TO SCALE; SHOWN TO INDICATE WORK TO BE DONE AND SUGGESTED ROUTING RATHER THAN EXACT ROUTING & LOCATION. MAKE USE OF ALL DATA IN CONTRACT DOCUMENTS, VERIFY AGAINST DEVELOPED FIELD CONDITIONS, & INSTALL WORK IN AN ORDERLY ARRANGEMENT IN A MANNER TO OVERCOME STRUCTURAL, MECHANICAL & ELECTRICAL INTERFERENCE.
9. PIPING VALVES NOT SHOWN, SEE CIRCULATION SCHEMATICS FOR VALVES REQUIRED, LOCATIONS, AND SPECIFICATIONS.
10. ALL VALVES SHALL BE ACCESSIBLE AT A MAXIMUM OF 7'-0" ABOVE FINISHED PUMP PIT OR POOL EQUIPMENT ROOM FLOOR.
11. PIPING SHALL BE ROUTED SO THERE WILL BE NO SECTION OF PIPING THAT MAY ALLOW AIR TO BE TRAPPED WITHIN THE SYSTEM.
12. AIR RELIEF VALVES SHALL BE INSTALLED IN THE PIPING AT ANY HIGH POINTS ALONG THE SYSTEM.

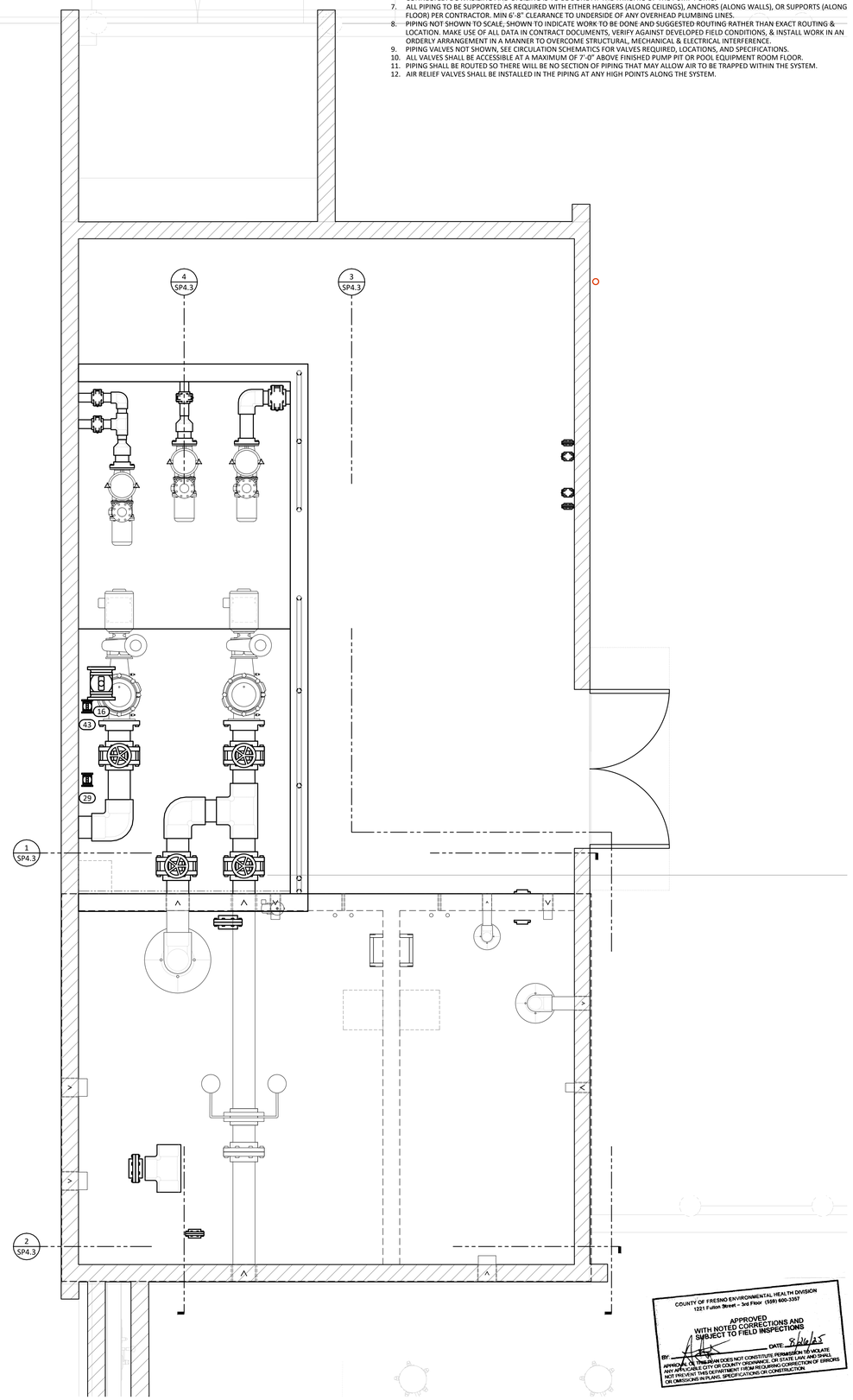

COUNTY OF FRESNO ENVIRONMENTAL HEALTH DIVISION
1221 Fulton Street - 3rd Floor (559) 600-3357
APPROVED
WITH NOTED CORRECTIONS AND
SUBJECT TO FIELD INSPECTIONS
BY: _____ DATE: 8/26/25
APPROVAL OF THIS PLAN/W DOES NOT CONSTITUTE PERMISSION TO VIOLATE ANY APPLICABLE CITY OR COUNTY ORDINANCE OR STATE LAW, AND SHALL NOT PREVENT THIS DEPARTMENT FROM REQUIRING CORRECTION OF ERRORS OR OMISSIONS IN PLANS, SPECIFICATIONS OR CONSTRUCTION.

EQUIPMENT ROOM BELOW GRADE PIPING PLAN (1)

1/2" = 1'-0"

AGD
ARCHITECTURE | DESIGN

ANDREW GOODWIN DESIGNS
1238 MONTEREY STREET
SAN LUIS OBISPO, CA 93422
t: (805) 439-1611
www.andrewgoodwin.us

RSM
Design | Engineering

ROGERS STRINGER MCCLELLAND
1981 N. BROADWAY, SUITE 202
WALNUT CREEK, CA 94596
PH. (925) 217-6619
www.rsm-de.com

These drawings are instruments of service and are the property of Andrew Goodwin Designs, Inc. The information represented on these drawings are exclusively for the project indicated and shall not be transferred or otherwise reproduced without express written permission of Andrew Goodwin.
Copyright 2023

SEAL

NOT FOR CONSTRUCTION

PROJECT

TRANQUILLITY HIGH SCHOOL
AQUATIC CENTER MODERNIZATION
6052 Juanche Ave,
Tranquillity, CA 93668

CLIENT

GOLDEN PLAINS UNIFIED SCHOOL DISTRICT

SHEET TITLE
BUILDING P
EQUIPMENT ROOM PIPING PLAN

PHASE DESCRIPTION
100% CD FCHD APPROVAL
SWIMMING POOL

DATE: 8/26/2025
TECHNICIAN: RD
PROJECT MANAGER: BR
JOB NUMBER: 791

SHEET NUMBER
SP4.1-1

PLOT DATE: 4/24/2025 3:26:20 PM

Copyright © **2025** RSM, Inc.-All Rights Reserved-This document was prepared for use only by the client, only for the purposes stated, and within a reasonable time from issuance. Non-commercial, educational, and scientific use of this document by regulatory agencies is regarded as a "fair use" and not a violation of copyright. Regulatory agencies may make additional copies of this document for internal use. Copies may also be made available to the public as required by law. The reprint must acknowledge the copyright and indicate that permission to reprint has been received.

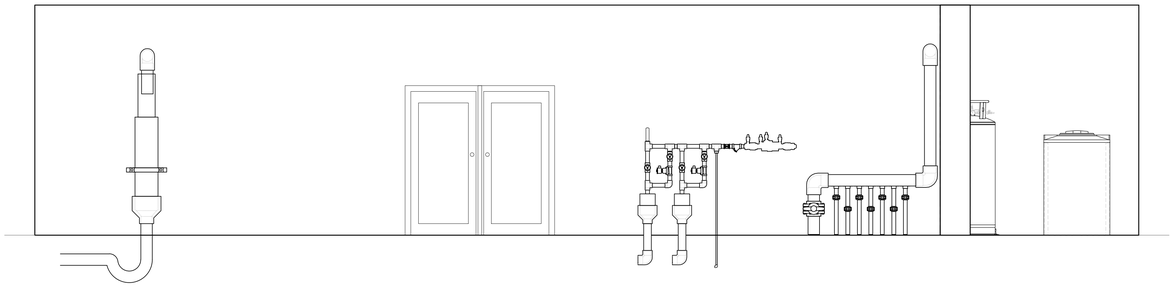

EQUIPMENT ROOM ELEVATION 7
3/8" = 1'-0"

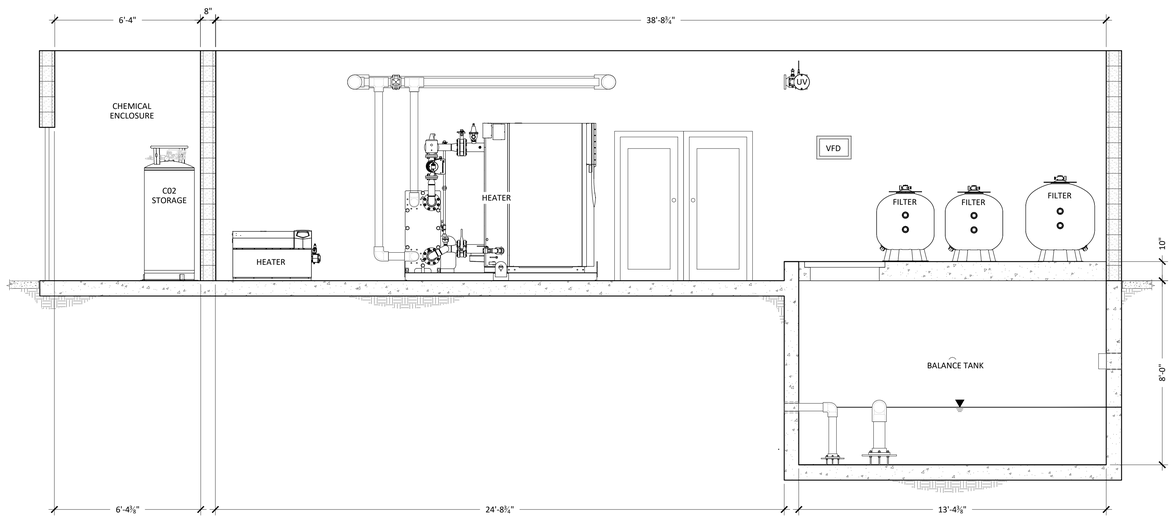

EQUIPMENT ROOM SECTION 6
3/8" = 1'-0"

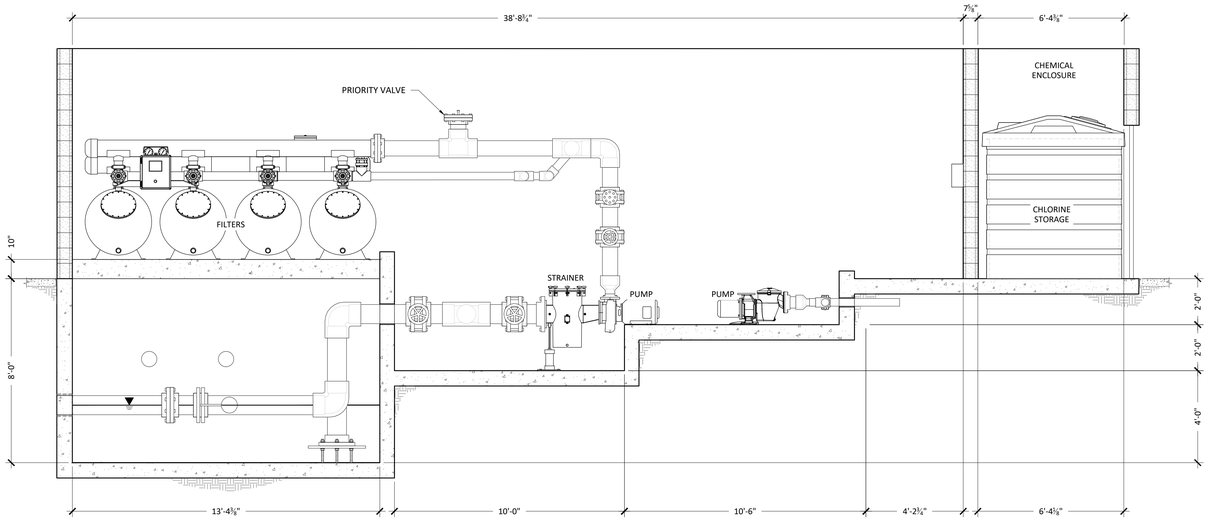

EQUIPMENT ROOM SECTION 5
3/8" = 1'-0"

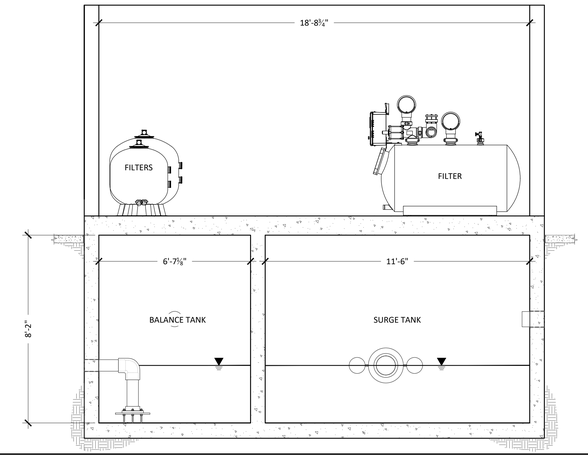

EQUIPMENT ROOM ELEVATIONS 4
3/8" = 1'-0"

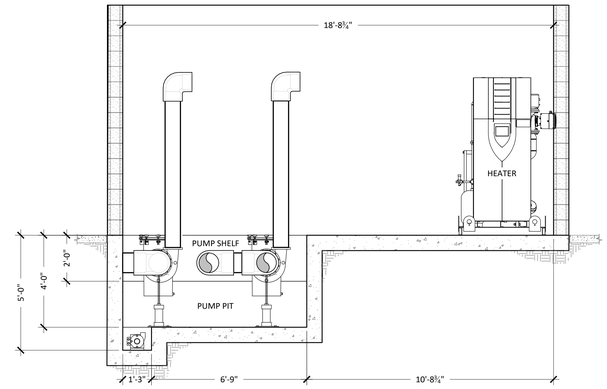

EQUIPMENT ROOM ELEVATIONS 3
3/8" = 1'-0"

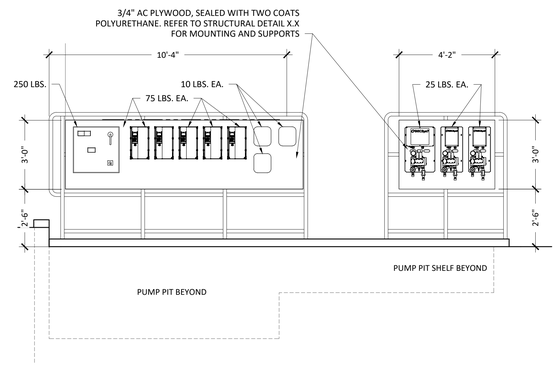

EQUIPMENT ROOM PANEL ELEVATION 2
3/8" = 1'-0"

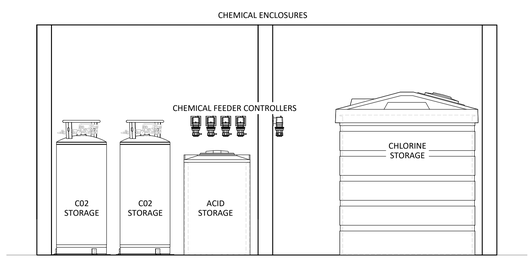

CHEMICAL ROOM ELEVATION 1
3/8" = 1'-0"

COUNTY OF FRESNO ENVIRONMENTAL HEALTH DIVISION
1221 Fulton Street – 3rd Floor (559) 600-3357
APPROVED WITH NOTED CORRECTIONS AND SUBJECT TO FIELD INSPECTIONS
BY: DATE: 8/26/25
APPROVAL OF THIS PLAN DOES NOT CONSTITUTE PERMISSION TO VIOLATE ANY APPLICABLE CITY OR COUNTY ORDINANCE OR STATE LAW, AND SHALL NOT PREVENT THIS DEPARTMENT FROM REQUIRING CORRECTION OF ERRORS OR OMISSIONS IN PLANS, SPECIFICATIONS OR CONSTRUCTION.

AGD
ARCHITECTURE | DESIGN

ANDREW GOODWIN DESIGNS
1238 MONTEREY STREET
SAN LUIS OBISPO, CA 93422
t: (805) 439-1611
www.andrewgoodwin.us

RSM
Design | Engineering
ROGERS STRINGER MCCLELLAND
1981 N. BROADWAY, SUITE 202
WALNUT CREEK, CA 94596
PH. (925) 217-6619
www.rsm-de.com

These drawings are instruments of service and are the property of Andrew Goodwin Designs, Inc. The information represented on these drawings are exclusively for the project indicated and shall not be transferred or otherwise reproduced without express written permission of Andrew Goodwin. Copyright 2023

SEAL

NOT FOR CONSTRUCTION

PROJECT

TRANQUILLITY HIGH SCHOOL
AQUATIC CENTER MODERNIZATION
6052 Juanche Ave,
Tranquillity, CA 93668

CLIENT

GOLDEN PLAINS UNIFIED SCHOOL DISTRICT

SHEET TITLE

BUILDING P
EQUIPMENT ROOM ELEVATIONS

PHASE DESCRIPTION
100% CD FCHD APPROVAL
SWIMMING POOL

DATE: 8/26/2025
TECHNICIAN: RD
PROJECT MANAGER: BR
JOB NUMBER: 791

SHEET NUMBER
SP4.2-1

PLOT DATE: 4/24/2025 3:26:20 PM

Copyright © **2025** RSM, Inc.-All Rights Reserved-This document was prepared for use only by the client, only for the purposes stated, and within a reasonable time from issuance. Non-commercial, educational, and scientific use of this document by regulatory agencies is regarded as a "fair use" and not a violation of copyright. Regulatory agencies may make additional copies of this document for internal use. Copies may also be made available to the public as required by law. The reprint must acknowledge the copyright and indicate that permission to reprint has been received.

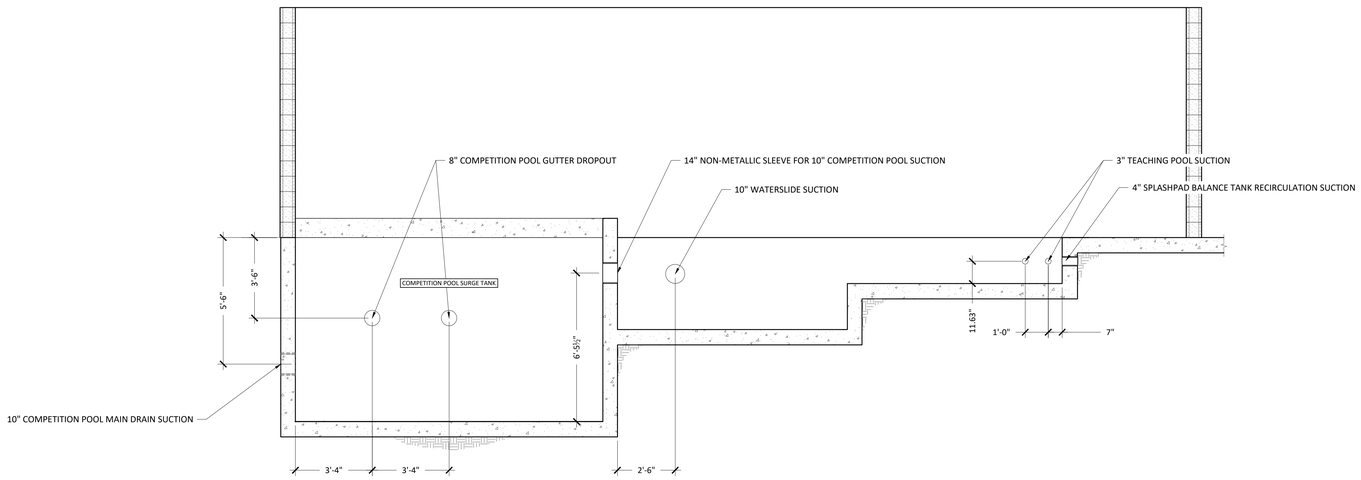

EQUIPMENT ROOM PIPE PENETRATION ELEVATION
3/8" = 1'-0"
4

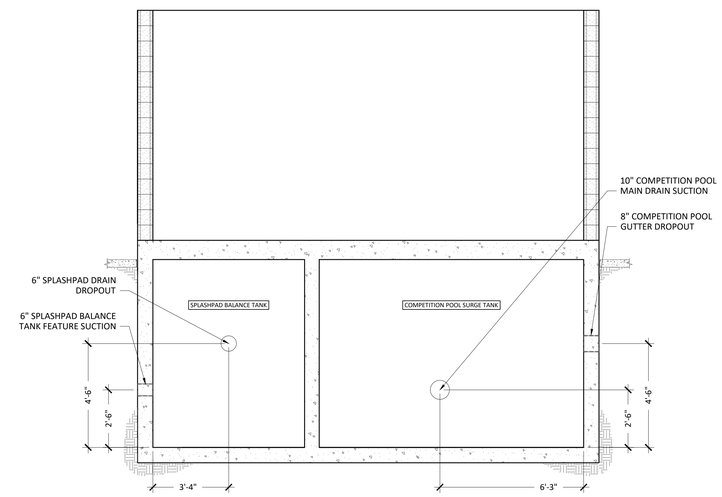

EQUIPMENT ROOM PIPE PENETRATION ELEVATION
3/8" = 1'-0"
2

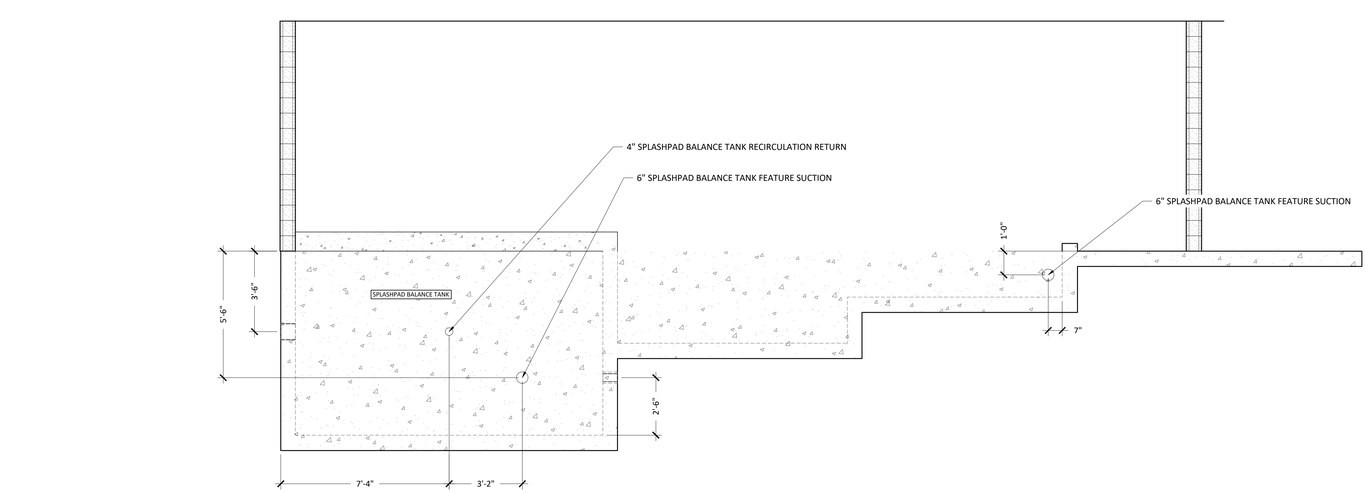

EQUIPMENT ROOM PIPE PENETRATION ELEVATION
3/8" = 1'-0"
3

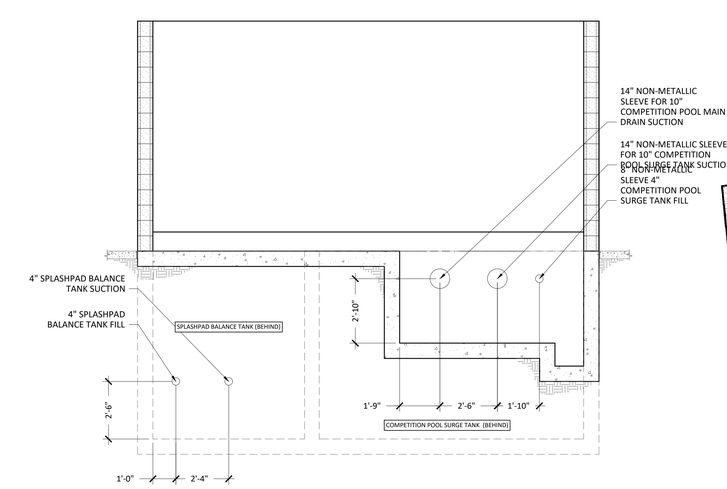

EQUIPMENT ROOM PIPE PENETRATION ELEVATION
3/8" = 1'-0"
1

AGD
ARCHITECTURE | DESIGN

ANDREW GOODWIN DESIGNS
1238 MONTEREY STREET
SAN LUIS OBISPO, CA 93422
t: (805) 439-1611
www.andrewgoodwin.us

RSM
Design | Engineering
ROGERS STRINGER MCCLELLAND
1981 N. BROADWAY, SUITE 202
WALNUT CREEK, CA 94596
PH. (925) 217-6619
www.rsm-de.com

These drawings are instruments of service and are the property of Andrew Goodwin Designs, Inc. The information represented on these drawings are exclusively for the project indicated and shall not be transferred or otherwise reproduced without express written permission of Andrew Goodwin. Copyright 2023

SEAL

NOT FOR CONSTRUCTION

PROJECT

TRANQUILLITY HIGH SCHOOL
AQUATIC CENTER MODERNIZATION
6052 Juanche Ave,
Tranquillity, CA 93668

CLIENT

GOLDEN PLAINS UNIFIED SCHOOL DISTRICT

COUNTY OF FRESNO ENVIRONMENTAL HEALTH DIVISION
1221 Fulton Street – 3rd Floor (559) 600-3357
APPROVED WITH NOTED CORRECTIONS AND SUBJECT TO FIELD INSPECTIONS
BY: DATE: 8/26/25
APPROVAL OF THIS PLAN DOES NOT CONSTITUTE PERMISSION TO VIOLATE ANY APPLICABLE CITY OR COUNTY ORDINANCE, OR STATE LAW, AND SHALL NOT PREVENT THIS DEPARTMENT FROM REQUIRING CORRECTION OF ERRORS OR OMISSIONS IN PLANS, SPECIFICATIONS OR CONSTRUCTION.

SHEET TITLE

BUILDING P
EQUIPMENT ROOM ELEVATIONS

PHASE DESCRIPTION
100% CD FCHD APPROVAL
SWIMMING POOL

DATE: 8/26/2025

TECHNICIAN: RD

PROJECT MANAGER: BR

JOB NUMBER: 791

SHEET NUMBER
SP4.3-1

PLOT DATE: 4/24/2025 3:26:20 PM

Copyright © **2025** RSM, Inc.-All Rights Reserved-This document was prepared for use only by the client, only for the purposes stated, and within a reasonable time from issuance. Non-commercial, educational, and scientific use of this document by regulatory agencies is regarded as a "fair use" and not a violation of copyright. Regulatory agencies may make additional copies of this document for internal use. Copies may also be made available to the public as required by law. The reprint must acknowledge the copyright and indicate that permission to reprint has been received.

SCHEMATIC LEGEND					
	BUTTERFLY VALVE		UNION		EXTENSION VALVE
	BALL VALVE		FLANGE BREAK		SOLENOID VALVE
	CHECK VALVE		FLOWMETER		PRESSURE GAUGE & COCK
	MULTI-PORT VALVE		IMPACT FLOWMETER		Y STRAINER
	MODULATING FLOAT VALVE		TEMP SENSOR		THERMOMETER
	WATER LINE		VOLTAGE CONTROL WIRING		POWER LINE

EQUIPMENT VALVES SCHEDULE	
CHECK VALVES	CENTERLINE, TECHNO, OR EQUIVALENT
2 & 3 PORT VALVES	HAYWARD, ASAHI, OR EQUIVALENT
FILTER VALVES	HAYWARD, ASAHI, OR EQUIVALENT
BUTTERFLY VALVES, **TYP	3" OR SMALLER - SPEARS, ASAHI, OR EQUIVALENT; 4" OR LARGER - DEZURIK OR EQUIVALENT
**FOR LINE SIZES OF 2.5" OR SMALLER, 2-PORT VALVES MAY BE USED IN LIEU OF BUTTERFLY VALVES. HAYWARD, PENTAIR OR EQUAL.	

NOTE:
INJECT ALL CHEMICALS INTO CHEMICAL BYPASS LINE IN THE CHEMICAL ROOM.

HEATER PIPING NOTES:
1. HEATER BRANCH LINES MUST BE EQUAL LENGTH.
2. HEATER BRANCH LINES MUST HAVE EQUAL FITTINGS.
3. VERIFY ALL DIMENSIONS AND LOCATIONS ON SITE PRIOR TO INSTALLATION.
4. START-UP OF HEATERS BY QUALIFIED MANUFACTURERS' REPRESENTATIVE ONLY.
5. HEATER SYSTEM IS SHOWN DIAGRAMMATICALLY.
6. REFER TO MANUFACTURER'S RECOMMENDATIONS PRIOR TO PIPING AND INSTALLATION OF MULTIPLE HEATER SYSTEM.

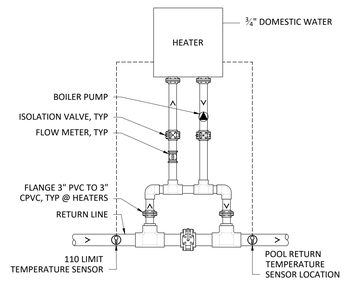

SINGLE HEATER PIPING SCHEMATIC
N.T.S.
3

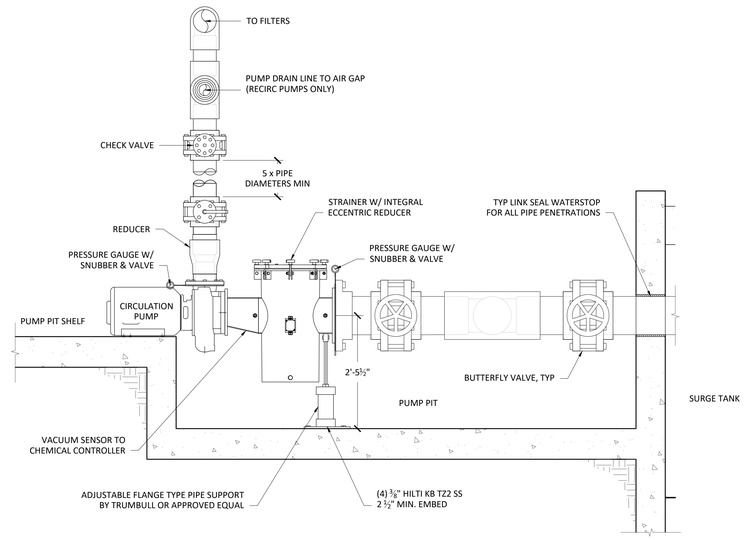

CIRCULATION PUMP ELEVATION
3/4" = 1'-0"
2

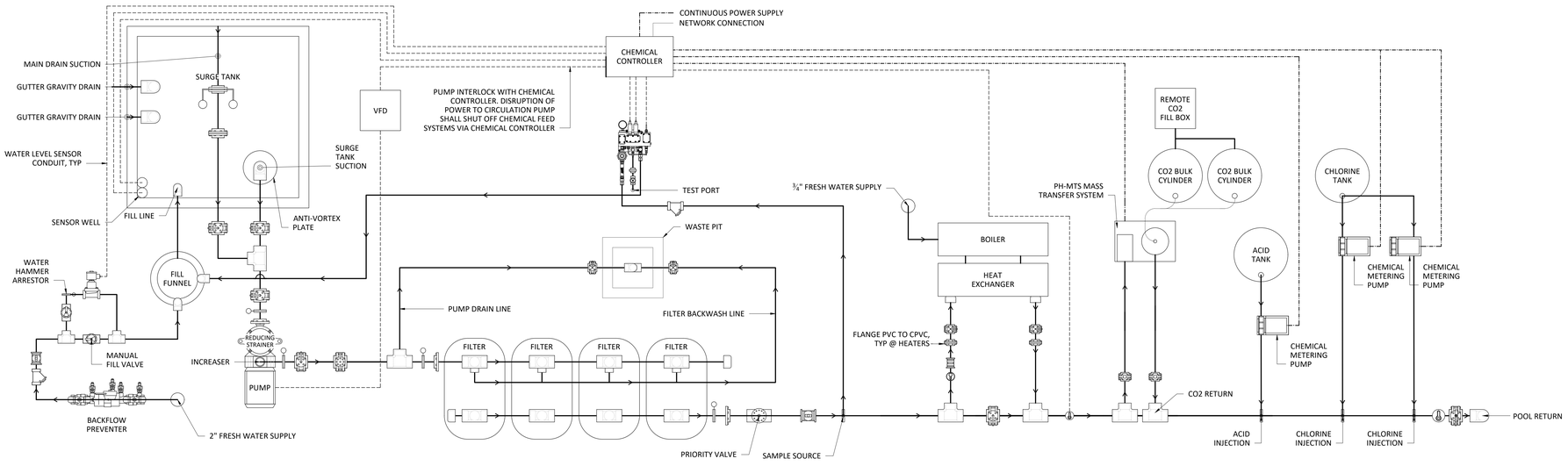

COUNTY OF FRESNO ENVIRONMENTAL HEALTH DIVISION
1221 Fulton Street – 3rd Floor (559) 600-3357
APPROVED WITH NOTED CORRECTIONS AND SUBJECT TO FIELD INSPECTIONS
BY _____ DATE: 8/26/25
APPROVAL OF THIS PLAN DOES NOT CONSTITUTE PERMISSION TO VIOLATE ANY APPLICABLE CITY OR COUNTY ORDINANCE, OR STATE LAW, AND SHALL NOT PREVENT THIS DEPARTMENT FROM REQUIRING CORRECTION OF ERRORS OR OMISSIONS IN PLANS, SPECIFICATIONS OR CONSTRUCTION.

COMPETITION POOL CIRCULATION SYSTEM SCHEMATIC
N.T.S.
1

AGD ARCHITECTURE | DESIGN
ANDREW GOODWIN DESIGNS
1238 MONTEREY STREET
SAN LUIS OBISPO, CA 93422
t: (805) 439-1611
www.andrewgoodwin.us

RSM Design | Engineering
ROGERS STRINGER MCCLELLAND
1981 N. BROADWAY, SUITE 202
WALNUT CREEK, CA 94596
PH. (925) 217-6619
www.rsm-de.com

These drawings are instruments of service and are the property of Andrew Goodwin Designs, Inc. The information represented on these drawings are exclusively for the project indicated and shall not be transferred or otherwise reproduced without express written permission of Andrew Goodwin. Copyright 2023

SEAL
NOT FOR CONSTRUCTION

PROJECT
TRANQUILLITY HIGH SCHOOL
AQUATIC CENTER MODERNIZATION
6052 Juanche Ave,
Tranquillity, CA 93668

CLIENT
GOLDEN PLAINS UNIFIED SCHOOL DISTRICT

SHEET TITLE
BUILDING P
EQUIPMENT ROOM
SCHEMATICS

PHASE DESCRIPTION
100% CD FCHD APPROVAL
SWIMMING POOL

DATE: 8/26/2025
TECHNICIAN: RD
PROJECT MANAGER: BR
JOB NUMBER: 791

SHEET NUMBER
SP4.4-1

PLOT DATE: 4/24/2025 3:26:20 PM

Copyright © 2025 RSM, Inc.-All Rights Reserved-This document was prepared for use only by the client, only for the purposes stated, and within a reasonable time from issuance. Non-commercial, educational, and scientific use of this document by regulatory agencies is regarded as a "fair use" and not a violation of copyright. Regulatory agencies may make additional copies of this document for internal use. Copies may also be made available to the public as required by law. The reprint must acknowledge the copyright and indicate that permission to reprint has been received.

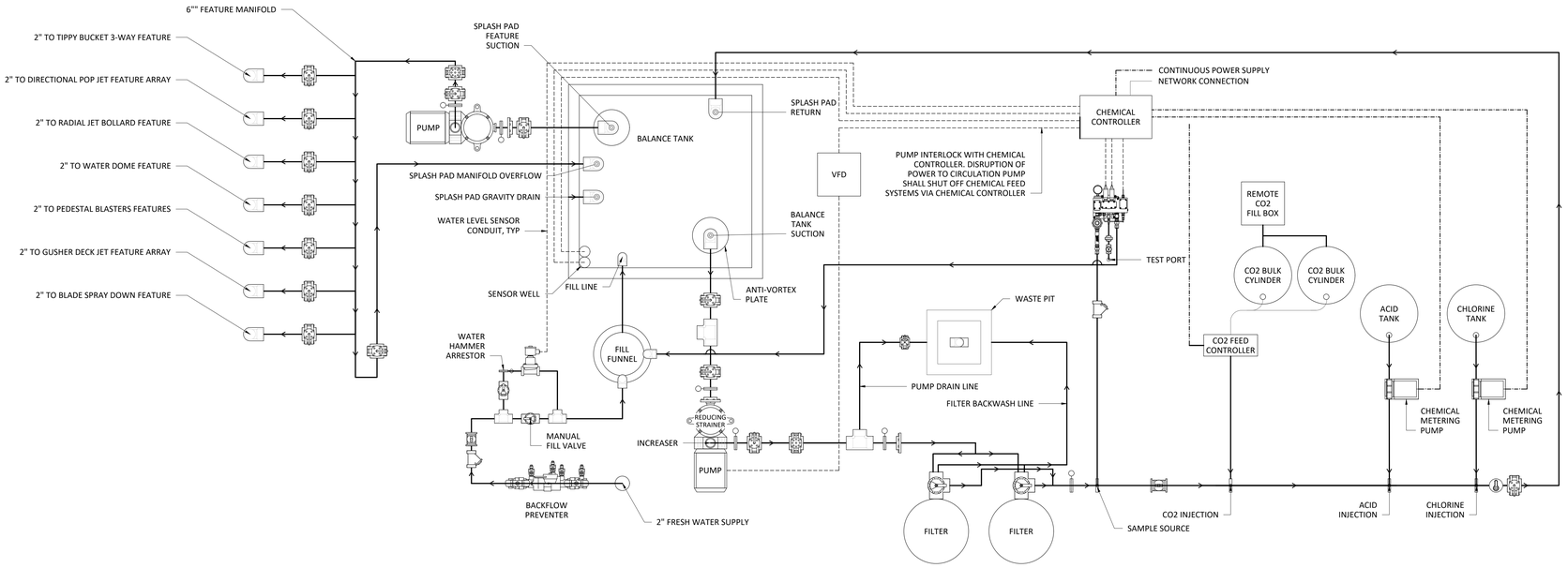

SCHEMATIC LEGEND					
	BUTTERFLY VALVE		UNION		EXTENSION VALVE
	BALL VALVE		FLANGE BREAK		SOLENOID VALVE
	CHECK VALVE		FLOWMETER		PRESSURE GAUGE & COCK
	MULTI-PORT VALVE		IMPACT FLOWMETER		Y STRAINER
	MODULATING FLOAT VALVE		TEMP SENSOR		THERMOMETER
	WATER LINE		VOLTAGE CONTROL WIRING		POWER LINE

EQUIPMENT VALVES SCHEDULE	
CHECK VALVES	CENTERLINE, TECHNO, OR EQUIVALENT
2 & 3 PORT VALVES	HAYWARD, ASAHI, OR EQUIVALENT
FILTER VALVES	HAYWARD, ASAHI, OR EQUIVALENT
BUTTERFLY VALVES, **TYP	3" OR SMALLER - SPEARS, ASAHI, OR EQUIVALENT; 4" OR LARGER - DEZURIK OR EQUIVALENT

**FOR LINE SIZES OF 2.5" OR SMALLER, 2-PORT VALVES MAY BE USED IN LIEU OF BUTTERFLY VALVES. HAYWARD, PENTAIR OR EQUAL.

NOTE:
INJECT ALL CHEMICALS INTO CHEMICAL BYPASS LINE IN THE CHEMICAL ROOM.

SPLASHPAD CIRCULATION SYSTEM SCHEMATIC
N.T.S.
2

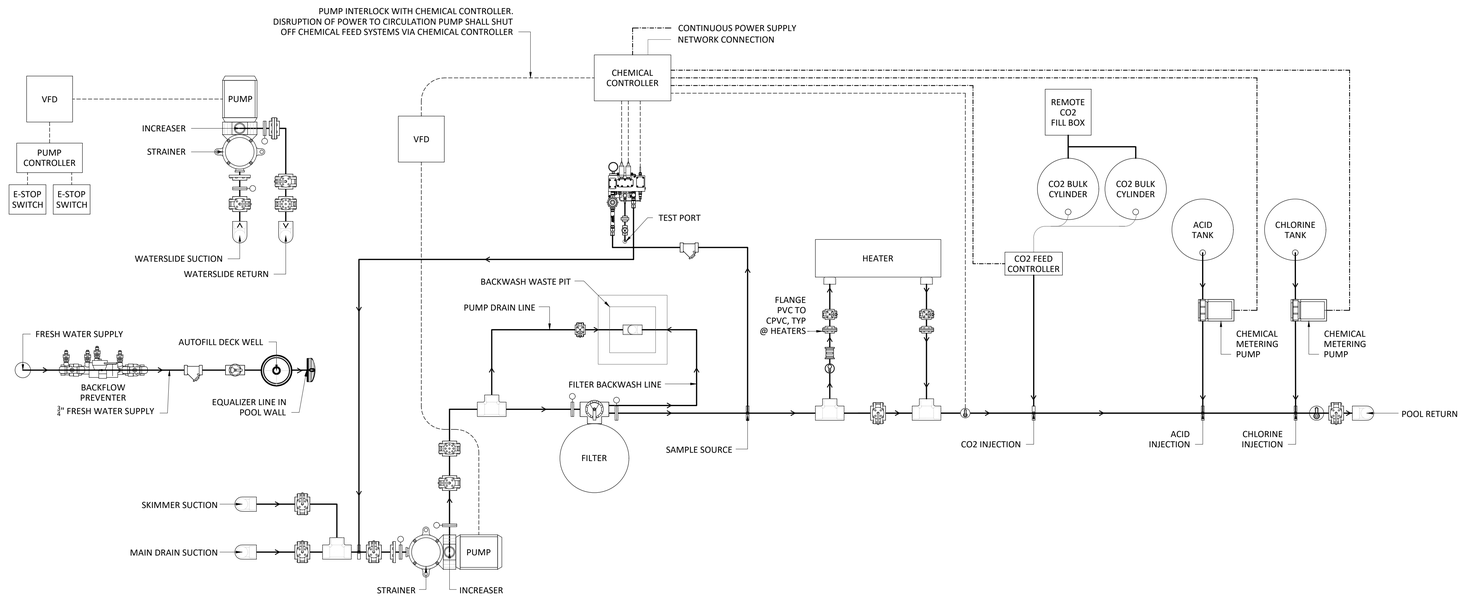

COUNTY OF FRESNO ENVIRONMENTAL HEALTH DIVISION
1221 Fulton Street – 3rd Floor (559) 600-3357
APPROVED WITH NOTED CORRECTIONS AND SUBJECT TO FIELD INSPECTIONS
BY: DATE: 8/26/25
APPROVAL OF THIS PLAN DOES NOT CONSTITUTE PERMISSION TO VIOLATE ANY APPLICABLE CITY OR COUNTY ORDINANCE, OR STATE LAW, AND SHALL NOT PREVENT THE DEPARTMENT FROM REQUIRING CORRECTION OF ERRORS OR OMISSIONS IN PLANS, SPECIFICATIONS OR CONSTRUCTION.

TEACHING POOL CIRCULATION SYSTEM SCHEMATIC
N.T.S.
1

AGD
ARCHITECTURE | DESIGN

ANDREW GOODWIN DESIGNS
1238 MONTEREY STREET
SAN LUIS OBISPO, CA 93422
t: (805) 439-1611
www.andrewgoodwin.us

RSM
Design | Engineering
ROGERS STRINGER MCCLELLAND
1981 N. BROADWAY, SUITE 202
WALNUT CREEK, CA 94596
PH. (925) 217-6619
www.rsm-de.com

These drawings are instruments of service and are the property of Andrew Goodwin Designs, Inc. The information represented on these drawings are exclusively for the project indicated and shall not be transferred or otherwise reproduced without express written permission of Andrew Goodwin. Copyright 2023

SEAL

NOT FOR CONSTRUCTION

PROJECT

TRANQUILLITY HIGH SCHOOL
AQUATIC CENTER MODERNIZATION
6052 Juanche Ave,
Tranquillity, CA 93668

CLIENT

GOLDEN PLAINS UNIFIED SCHOOL DISTRICT

SHEET TITLE
BUILDING P
EQUIPMENT ROOM
SCHEMATICS

PHASE DESCRIPTION
100% CD FCHD APPROVAL
SWIMMING POOL

DATE: 8/26/2025
TECHNICIAN: RD
PROJECT MANAGER: BR
JOB NUMBER: 791

SHEET NUMBER
SP4.5-1

PLOT DATE: 4/24/2025 3:26:20 PM

Copyright © **2025** RSM, Inc.-All Rights Reserved-This document was prepared for use only by the client, only for the purposes stated, and within a reasonable time from issuance. Non-commercial, educational, and scientific use of this document by regulatory agencies is regarded as a "fair use" and not a violation of copyright. Regulatory agencies may make additional copies of this document for internal use. Copies may also be made available to the public as required by law. The reprint must acknowledge the copyright and indicate that permission to reprint has been received.

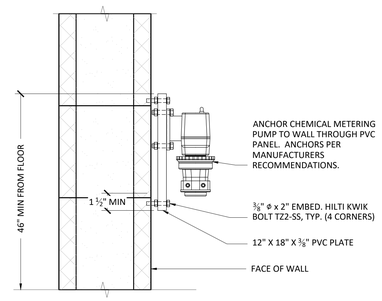

STENNER CHEMICAL PUMP MOUNTING

N.T.S. (6)

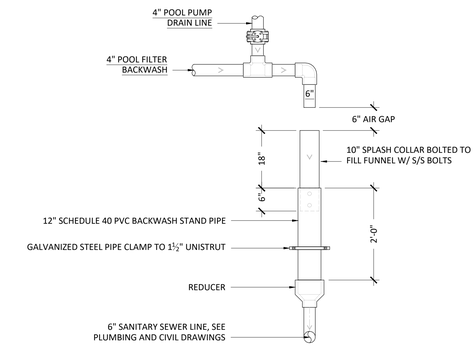

BACKWASH STAND PIPE

N.T.S. (3)

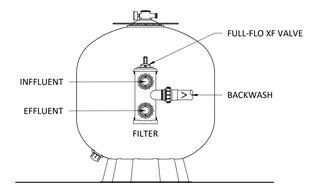

TEACHING POOL & SPLASHPAD FILTER ELEVATION

N.T.S. (5)

NOTES:
1. TANKS USED FOR THE STORAGE OF HAZARDOUS MATERIALS SHALL BE PLACARDED WITH HAZARD IDENTIFICATION SIGNS AS SPECIFIED IN CFC STANDARD 79-3 FOR THE MATERIAL CONTAINED. SIGNS SHALL BE DURABLE. THE SIZE, COLOR, AND LETTERING SHALL BE IN ACCORDANCE WITH NATIONALLY RECOGNIZED STANDARDS.
2. PIPING, TUBING, VALVES, AND RELATED COMPONENTS SHALL BE SEISMICALLY BRACED.
3. PIPING AND TUBING SHALL BE IDENTIFIED TO INDICATE THE MATERIAL CONVEYED.
4. EMERGENCY SHUT OFF VALVES SHALL BE IDENTIFIED AND THE LOCATION SHALL BE CLEARLY VISIBLE AND INDICATED BY A SIGN.

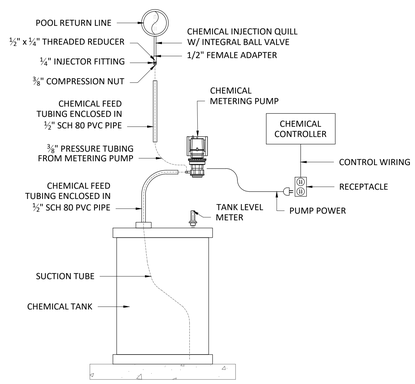

CHEMICAL FEED TANK

N.T.S. (2)

ANTI-VORTEX PLATE TABLE				
SUCTION PIPE SIZE	VORTEX PLATE DIAMETER	HARDWARE SIZE	DIMENSION "A"	MIN EMBEDMENT
2½"	9"	⅝"	3"	4"
3"	9"	⅝"	3"	4"
4"	12"	⅝"	3"	4"
6"	16"	¾"	3"	4¾"
8"	18"	¾"	4"	4¾"
10"	24"	¾"	4"	4¾"
12"	36"	¾"	4"	4¾"

ALL HARDWARE TO BE STAINLESS STEEL

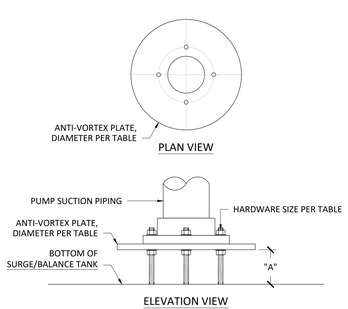

ANTI-VORTEX PLATE

N.T.S. (7)

DETAIL NOTES:
1. VERIFY PIPE ELEVATIONS FROM MANUFACTURER CUT SHEET.
2. DETAIL FOR REFERENCE ONLY, DOES NOT ILLUSTRATE SPECIFIC FILTERS AND/OR NUMBER OF FILTERS.

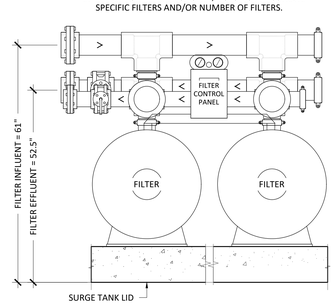

COMPETITION POOL FILTER ELEVATION

N.T.S. (4)

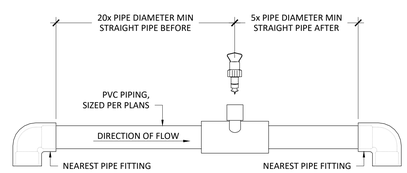

FLOW METER SENSOR

N.T.S. (1)

AGD ARCHITECTURE | DESIGN

ANDREW GOODWIN DESIGNS
1238 MONTEREY STREET
SAN LUIS OBISPO, CA 93422
t: (805) 439-1611
www.andrewgoodwin.us

RSM Design | Engineering
ROGERS STRINGER MCCLELLAND
1981 N. BROADWAY, SUITE 202
WALNUT CREEK, CA 94596
PH. (925) 217-6619
www.rsm-de.com

These drawings are instruments of service and are the property of Andrew Goodwin Designs, Inc. The information represented on these drawings are exclusively for the project indicated and shall not be transferred or otherwise reproduced without express written permission of Andrew Goodwin. Copyright 2023

SEAL

NOT FOR CONSTRUCTION

PROJECT

TRANQUILLITY HIGH SCHOOL
AQUATIC CENTER MODERNIZATION
6052 Juanche Ave,
Tranquillity, CA 93668

CLIENT

GOLDEN PLAINS UNIFIED SCHOOL DISTRICT

SHEET TITLE

BUILDING P
EQUIPMENT ROOM DETAILS

PHASE DESCRIPTION
100% CD FCHD APPROVAL
SWIMMING POOL

DATE: 8/26/2025
TECHNICIAN: RD
PROJECT MANAGER: BR
JOB NUMBER: 791

SHEET NUMBER
SP4.6-1

PLOT DATE: 4/24/2025 3:26:20 PM

Copyright © **2025** RSM, Inc.-All Rights Reserved-This document was prepared for use only by the client, only for the purposes stated, and within a reasonable time from issuance. Non-commercial, educational, and scientific use of this document by regulatory agencies is regarded as a "fair use" and not a violation of copyright. Regulatory agencies may make additional copies of this document for internal use. Copies may also be made available to the public as required by law. The reprint must acknowledge the copyright and indicate that permission to reprint has been received.

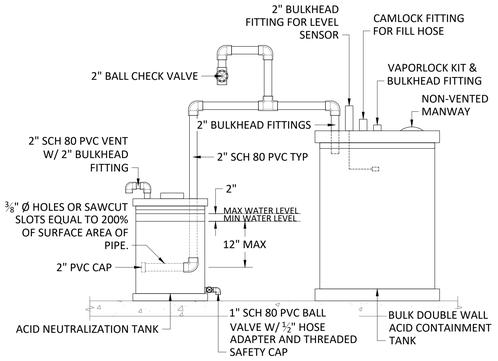

ACID VAPOR RECOVERY
N.T.S.

6

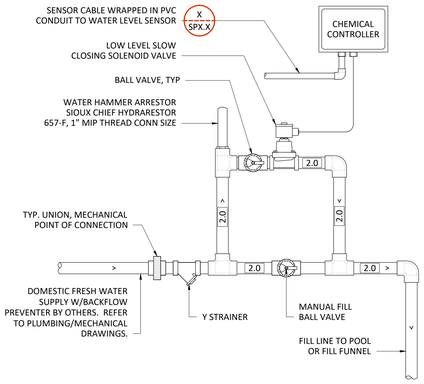

AUTOFILL MANIFOLD
3/4" = 1'-0"

3

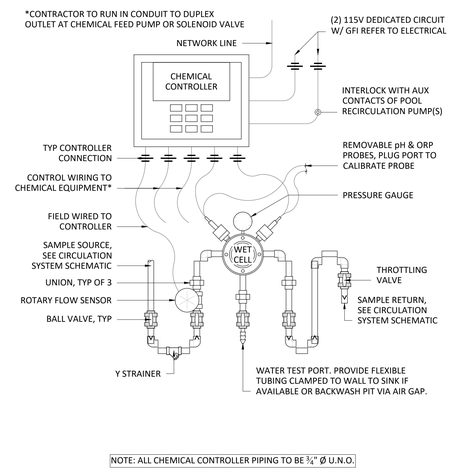

CHEMICAL CONTROLLER SCHEMATIC
N.T.S.

5

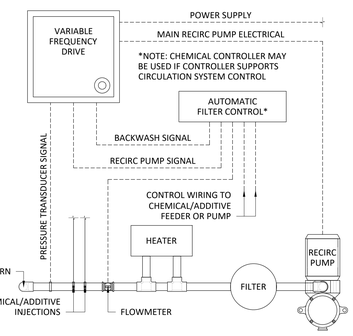

VFD SCHEMATIC
N.T.S.

2

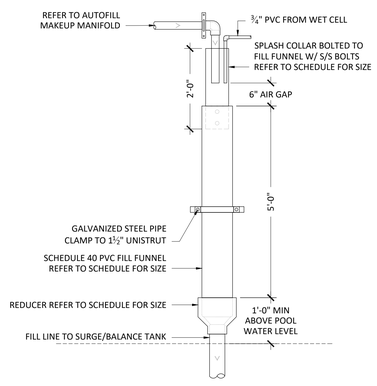

FILL FUNNEL SCHEDULE				
BODY OF WATER	FILL FUNNEL SIZE	REDUCER SIZE	SPLASH COLLAR SIZE	FILL LINE SIZE TO SURGE/BALANCE TANK
COMPETITION	0'-6"	6"X4"	0'-4"	0'-4"
SPLASHPAD	0'-6"	6"X4"	0'-4"	0'-4"

FILL FUNNEL
N.T.S.

7

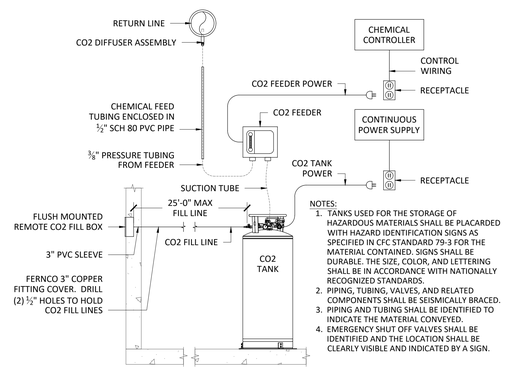

NOTES:
1. TANKS USED FOR THE STORAGE OF HAZARDOUS MATERIALS SHALL BE PLACARDED WITH HAZARD IDENTIFICATION SIGNS AS SPECIFIED IN CFC STANDARD 79-3 FOR THE MATERIAL CONTAINED. SIGNS SHALL BE DURABLE. THE SIZE, COLOR, AND LETTERING SHALL BE IN ACCORDANCE WITH NATIONALLY RECOGNIZED STANDARDS.
2. PIPING, TUBING, VALVES, AND RELATED COMPONENTS SHALL BE SEISMICALLY BRACED.
3. PIPING AND TUBING SHALL BE IDENTIFIED TO INDICATE THE MATERIAL CONVEYED.
4. EMERGENCY SHUT OFF VALVES SHALL BE IDENTIFIED AND THE LOCATION SHALL BE CLEARLY VISIBLE AND INDICATED BY A SIGN.

CO2 FEED SYSTEM
N.T.S.

4

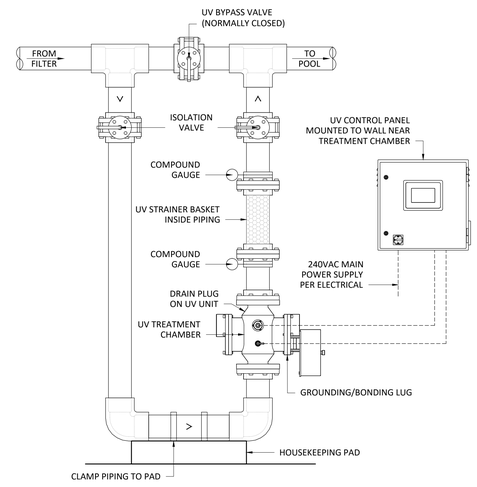

UV SYSTEM
SCALE

1

AGD
ARCHITECTURE | DESIGN

ANDREW GOODWIN DESIGNS
1238 MONTEREY STREET
SAN LUIS OBISPO, CA 93422
t: (805) 439-1611
www.andrewgoodwin.us

RSM
Design | Engineering
ROGERS STRINGER MCCLELLAND
1981 N. BROADWAY, SUITE 202
WALNUT CREEK, CA 94596
PH. (925) 217-6619
www.rsm-de.com

These drawings are instruments of service and are the property of Andrew Goodwin Designs, Inc. The information represented on these drawings are exclusively for the project indicated and shall not be transferred or otherwise reproduced without express written permission of Andrew Goodwin. Copyright 2023

SEAL

NOT FOR CONSTRUCTION

PROJECT

TRANQUILLITY HIGH SCHOOL
AQUATIC CENTER MODERNIZATION
6052 Juanche Ave,
Tranquillity, CA 93668

CLIENT

GOLDEN PLAINS UNIFIED SCHOOL DISTRICT

COUNTY OF FRESNO ENVIRONMENTAL HEALTH DIVISION
1221 Fulton Street – 3rd Floor (559) 600-3357
APPROVED WITH NOTED CORRECTIONS AND SUBJECT TO FIELD INSPECTIONS
BY: DATE: 8/26/25
APPROVAL OF THESE PLANS/SPECS DOES NOT CONSTITUTE PERMISSION TO VIOLATE ANY APPLICABLE CITY OR COUNTY ORDINANCE, OR STATE LAW, AND SHALL NOT PREVENT THIS DEPARTMENT FROM REQUIRING CORRECTION OF ERRORS OR OMISSIONS IN PLANS, SPECIFICATIONS OR CONSTRUCTION.

SHEET TITLE

BUILDING P
EQUIPMENT ROOM DETAILS

PHASE DESCRIPTION
100% CD FCHD APPROVAL
SWIMMING POOL

DATE: 8/26/2025

TECHNICIAN: RD

PROJECT MANAGER: BR

JOB NUMBER: 791

SHEET NUMBER
SP4.7-1

PLOT DATE: 4/24/2025 3:26:20 PM

Copyright © **2025** RSM, Inc.-All Rights Reserved-This document was prepared for use only by the client, only for the purposes stated, and within a reasonable time from issuance. Non-commercial, educational, and scientific use of this document by regulatory agencies is regarded as a "fair use" and not a violation of copyright. Regulatory agencies may make additional copies of this document for internal use. Copies may also be made available to the public as required by law. The reprint must acknowledge the copyright and indicate that permission to reprint has been received.

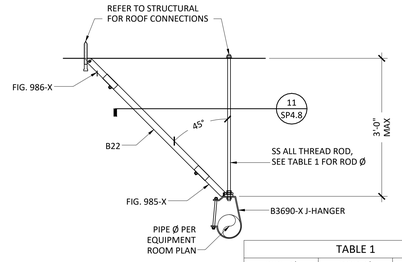

TABLE 1		
PIPE Ø	ROD Ø	SPACING
10"	7/8"	6'-0" MAX
6"	1/2"	6'-0" MAX
4"	1/2"	6'-0" MAX
3"	1/2"	8'-0" MAX

NOTE: CONTRACTOR SHALL FOLLOW ALL RECOMMENDATIONS FROM MANUFACTURER.

BRACE/HANGER SUPPORT (11)
N.T.S.

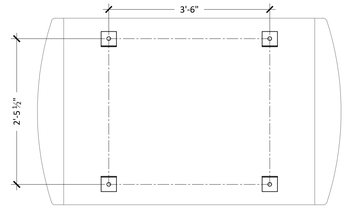

BOLT PATTERN PLAN

ANCHORAGE SCHEDULE				
EQUIPMENT	WEIGHT	ANCHOR	EMBEDMENT	INSTALL TORQUE
FILTER	5,030 LBS	1/2"Ø HILTI KB TZ2-SS	3.00 IN	40 FT-LBS
ALL ANCHORS, NUTS, AND WASHERS SHALL BE STAINLESS STEEL				

NOTE: FILTER ANCHORS HAVE BEEN DESIGNED TO INCLUDE THE SEISMIC MASS OF THE FILTER MANIFOLD ABOVE.

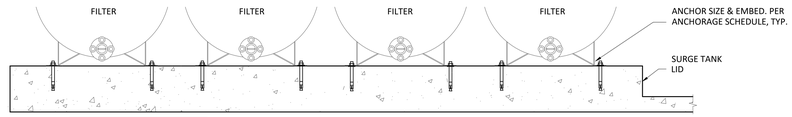

NOTE: BOND & GROUND PER CEC

FILTER ANCHORAGE (4)
N.T.S.

ANCHORAGE SCHEDULE				
EQUIPMENT	EQUIPMENT WEIGHT	ANCHOR TYPE	EMBEDMENT	INSTALLATION TORQUE
HEATER	3,500 lbs	3/8" Ø HILTI KB TZ2-SS	2.50 IN	25 FT-LBS
ALL ANCHORS, NUTS, AND WASHERS SHALL BE STAINLESS STEEL				

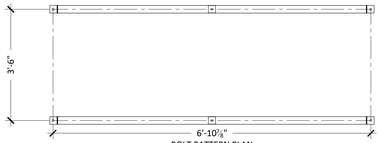

BOLT PATTERN PLAN

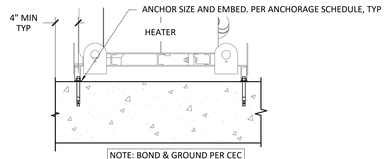

NOTE: BOND & GROUND PER CEC

HEATER ANCHORAGE (10)
N.T.S.

ANCHORAGE SCHEDULE				
EQUIPMENT	WEIGHT	ANCHOR	EMBEDMENT	INSTALL TORQUE
C-SERIES PUMP	400 LBS	3/8"Ø HILTI KB TZ-SS	2.50 IN	25 FT-LBS
ALL ANCHORS, NUTS, AND WASHERS SHALL BE STAINLESS STEEL				

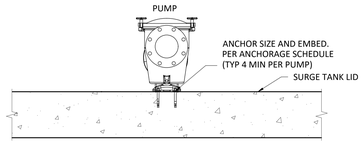

NOTE: BOND & GROUND PER CEC

SMALL PUMP ANCHORAGE (7)
N.T.S.

ANCHORAGE SCHEDULE				
EQUIPMENT	WEIGHT	ANCHOR	EMBEDMENT	INSTALL TORQUE
COMPETITION POOL /WATERSLIDE PUMP	650 LBS	3/8"Ø HILTI KB TZ-SS	2.50 IN	25 FT-LBS
ALL ANCHORS, NUTS, AND WASHERS SHALL BE STAINLESS STEEL				

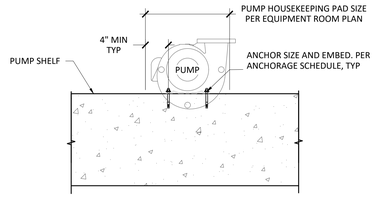

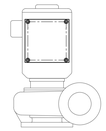

BOLT PATTERN PLAN

NOTE: BOND & GROUND PER CEC

LARGE PUMP ANCHORAGE (3)
N.T.S.

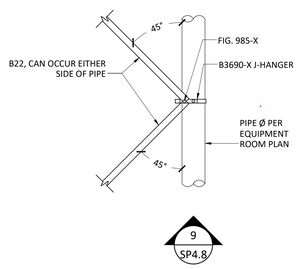

NOTE: CONTRACTOR SHALL FOLLOW ALL RECOMMENDATIONS FROM MANUFACTURER.

SEISMIC SUPPORT PLAN VIEW (13)
N.T.S.

ANCHORAGE SCHEDULE				
EQUIPMENT	WEIGHT	ANCHOR	EMBEDMENT	INSTALL TORQUE
CO2 FEED SYSTEM	400 LBS	3/8"Ø HILTI KB TZ2-SS	2.50 IN	25 FT-LBS
ALL ANCHORS, NUTS, AND WASHERS SHALL BE STAINLESS STEEL				

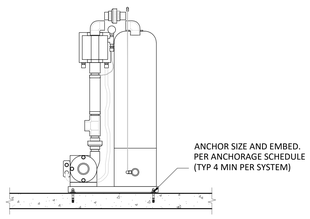

NOTE: BOND & GROUND PER CEC

CO2 FEED SYSTEM ANCHORAGE (9)
N.T.S.

ANCHORAGE SCHEDULE				
EQUIPMENT	WEIGHT	ANCHOR	EMBEDMENT	INSTALL TORQUE
ACID TANK	1,750 LBS	3/8"Ø HILTI KB TZ2-SS	2.50 IN	25 FT-LBS
ACID VAPOR RECOVERY	350 LBS	3/8"Ø HILTI KB TZ2-SS	2.50 IN	25 FT-LBS
CHLORINE TANK	5,000 LBS	1/2"Ø HILTI KB TZ2-SS	3.00 IN	40 FT-LBS
ALL ANCHORS, NUTS, AND WASHERS SHALL BE STAINLESS STEEL				

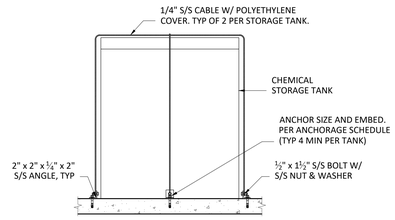

NOTE: BOND & GROUND PER CEC

CHEMICAL TANK ANCHORAGE (6)
N.T.S.

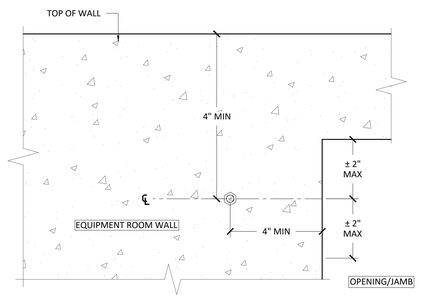

NOTES:
1. CONTRACTOR SHALL FOLLOW ALL RECOMMENDATIONS FROM MANUFACTURER.
2. ALL MOUNTING, SUPPORTS, ANCHORS, AND FASTENERS TO BE STAINLESS STEEL EATON B-LINE SERIES STRUT SYSTEM U.N.O.

MINIMUM BOLT CLEARANCE ELEVATION (2)
N.T.S.

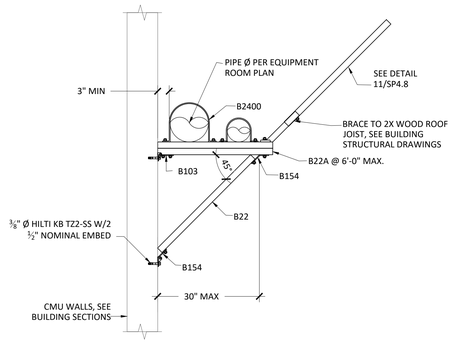

NOTE: CONTRACTOR SHALL FOLLOW ALL RECOMMENDATIONS FROM MANUFACTURER.

BRACE PIPE SUPPORT (12)
N.T.S.

ANCHORAGE SCHEDULE				
EQUIPMENT	WEIGHT	ANCHOR	EMBEDMENT	INSTALL TORQUE
BULK CO2 TANK	1,050 LBS	1/2"Ø HILTI KB TZ2-SS	3.000 IN	40 FT-LBS
ALL ANCHORS, NUTS, AND WASHERS SHALL BE STAINLESS STEEL				

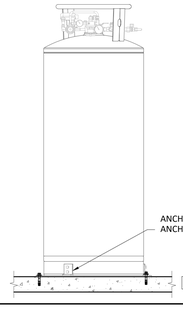

NOTE: BOND & GROUND PER CEC

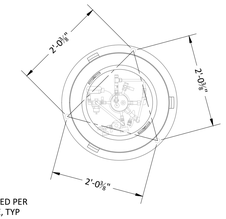

BOLT PATTERN PLAN

BULK CO2 TANK ACNHORAGE (8)
N.T.S.

ANCHORAGE SCHEDULE				
EQUIPMENT	WEIGHT	ANCHOR	EMBEDMENT	INSTALL TORQUE
TEACHING POOL FILTER	1000 LBS	3/4" Ø HILTI KB TZ-SS	2.50 IN	25 FT-LBS
SPLASHPAD FILTER	700 LBS	3/4" Ø HILTI KB TZ-SS	2.50 IN	25 FT-LBS
ALL ANCHORS, NUTS, AND WASHERS SHALL BE STAINLESS STEEL				

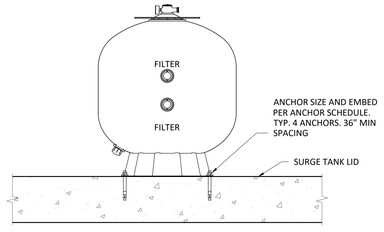

NOTE: BOND & GROUND PER CEC

FILTER ANCHORAGE (5)
N.T.S.

MECHANICAL ANCHORS

1. FASTENERS SHALL BE STAINLESS STEEL FOR EXTERIOR USE OR WHEN EXPOSED TO WEATHER. PROVIDE GALVANIZED CARBON STEEL ANCHORS AT OTHER LOCATIONS, UNLESS OTHERWISE NOTED.
2. IF REINFORCEMENT IS ENCOUNTERED DURING DRILLING, ABANDON AND SHIFT THE HOLE LOCATION TO AVOID THE REINFORCEMENT. PROVIDE A MINIMUM OF 2 ANCHOR DIAMETERS OR 1 INCH, WHICHEVER IS LARGER, OF SOUND CONCRETE BETWEEN THE DOWEL AND THE ABANDONED HOLE. FILL THE ABANDONED HOLE WITH NON-SHRINK GROUT. IF THE ANCHOR OR DOWEL MAY NOT BE SHIFTED AS NOTED ABOVE, THE STRUCTURAL ENGINEER'S APPROVAL IS REQUIRED FOR NEW LOCATION.
3. LOCATE REINFORCEMENT AND CONFIRM FINAL ANCHOR LOCATIONS PRIOR TO FABRICATING PLATES, MEMBERS, OR OTHER STEEL ASSEMBLIES ATTACHED WITH MECHANICAL ANCHORS.
4. ANCHORS SHALL BE PROOF-TESTED BY OWNER'S TESTING AND INSPECTION AGENCY.
5. TEST ANCHORS NO SOONER THAN 24 HOURS AFTER INSTALLATION.
6. APPLY TEST LOAD BY ANY METHOD THAT WILL EFFECTIVELY MEASURE THE TENSION ON THE ANCHOR SUCH AS DIRECT PULL WITH A HYDRAULIC JACK, TORQUE WRENCH, OR CALIBRATED SPRING_LOADING DEVICES, ETC.
7. REACTION LOADS FROM TEST FIXTURES MAY BE APPLIED CLOSE TO THE ANCHOR BEING TESTED, PROVIDED THE ANCHOR IS NOT RESTRAINED FROM WITHDRAWING BY A BASE PLATE OR OTHER FIXTURE. IF RESTRAINT IS FOUND, LOOSEN AND SHIM OR REMOVE THE FIXTURE PRIOR TO TESTING.
8. TEST 50% OF ANCHORS PER ONE OF THE FOLLOWING METHODS AND IN ACCORDANCE WITH THE VALUES SHOWN IN THE ANCHORAGE SCHEDULE:
   A. HYDRAULIC RAM METHOD: APPLY PROOF TEST LOAD WITHOUT REMOVING THE NUT. IF IT IS NOT POSSIBLE TO TEST WITH THE NUT INSTALLED, REPLACE THE NUT WITH A THREADED COUPLER TO THE SAME TORQUE MEASURED WITH A TORQUE WRENCH, AND THEN APPLY THE LOAD. ANCHOR IS ACCEPTABLE IF NO MOVEMENT IS OBSERVED AT THE TEST LOAD. MOVEMENT MAY BE DETERMINED WHEN THE WASHER UNDER THE NUT BECOMES LOOSE.
   B. TORQUE WRENCH METHOD: TEST ANCHORS TO THE TORQUE LOAD INDICATED IN THE TABLE WITHIN ONE-HALF TURN OF THE NUT.
14. IF ANY ANCHOR FAILS TESTING, REPLACE ANCHOR AND TEST ADDITIONAL ANCHORS OF THE SAME CATEGORY NOT PREVIOUSLY TESTED UNTIL TWENTY (20) CONSECUTIVE TESTS PASS, THEN RESUME INITIAL TESTING FREQUENCY.

ANCHORAGE NOTES (1)
N.T.S.

AGD ARCHITECTURE | DESIGN

ANDREW GOODWIN DESIGNS
1238 MONTEREY STREET
SAN LUIS OBISPO, CA 93422
t: (805) 439-1611
www.andrewgoodwin.us

RSM Design | Engineering
ROGERS STRINGER MCCLELLAND
1981 N. BROADWAY, SUITE 202
WALNUT CREEK, CA 94596
PH. (925) 217-6619
www.rsm-de.com

These drawings are instruments of service and are the property of Andrew Goodwin Designs, Inc. The information represented on these drawings are exclusively for the project indicated and shall not be transferred or otherwise reproduced without express written permission of Andrew Goodwin. Copyright 2023

SEAL

NOT FOR CONSTRUCTION

PROJECT

TRANQUILLITY HIGH SCHOOL
AQUATIC CENTER MODERNIZATION
6052 Juanche Ave,
Tranquillity, CA 93668

CLIENT

GOLDEN PLAINS UNIFIED SCHOOL DISTRICT

COUNTY OF FRESNO ENVIRONMENTAL HEALTH DIVISION
1221 Fulton Street – 3rd Floor (559) 600-3357
APPROVED WITH NOTED CORRECTIONS AND SUBJECT TO FIELD INSPECTIONS
BY: DATE: 8/26/25
APPROVAL OF THIS PLAN DOES NOT CONSTITUTE PERMISSION TO VIOLATE ANY APPLICABLE CITY OR COUNTY ORDINANCE, OR STATE LAW, NOR SHALL IT NOT PREVENT THIS DEPARTMENT FROM REQUIRING CORRECTION OF ERRORS OR OMISSIONS IN PLANS, SPECIFICATIONS OR CONSTRUCTION.

SHEET TITLE

BUILDING P
EQUIPMENT ROOM
ANCHORAGE DETAILS

PHASE DESCRIPTION
100% CD FCHD APPROVAL
SWIMMING POOL

DATE: 8/26/2025

TECHNICIAN: RD

PROJECT MANAGER: BR

JOB NUMBER: 791

SHEET NUMBER
SP4.8-1

PLOT DATE: 4/24/2025 3:26:20 PM

Copyright © 2025 RSM, Inc.-All Rights Reserved-This document was prepared for use only by the client, only for the purposes stated, and within a reasonable time from issuance. Non-commercial, educational, and scientific use of this document by regulatory agencies is regarded as a "fair use" and not a violation of copyright. Regulatory agencies may make additional copies of this document for internal use. Copies may also be made available to the public as required by law. The reprint must acknowledge the copyright and indicate that permission to reprint has been received.

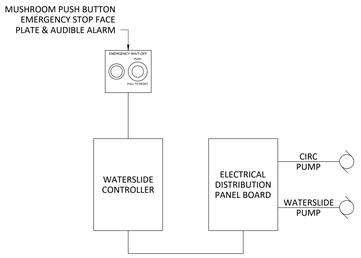

SPA ELECTRICAL RELAYS DIAGRAM

N.T.S.

1

DETAIL NOTES:

1. PROVIDE 120 VAC PRIMARY 24 VAC SECONDARY TRANSFORMER IN NEMA ENCLOSURE WITH PRIMARY FUSE PROTECTION.
2. PROVIDE ONE CONTROL SYSTEM PER POOL.
3. THE CHEMICAL FEEDERS MAY DERIVE THEIR POWER DIRECTLY FROM THE CHEMICAL CONTROLLER.
4. MUSHROOM PUSH-BUTTON STATION FOR WATERSLIDE ONLY. ASCO #173A19 FOR FLUSH AND #173A20 FOR SURFACE MOUNTING. VERIFY MOUNTING APPLICATION WITH MANUFACTURER. FIELD VERIFY LOCATION. CIRCULATION PUMP SHALL MAINTAIN POWER OFF IN THE EVENT THE EMERGENCY SIGNAL IS OPEN.

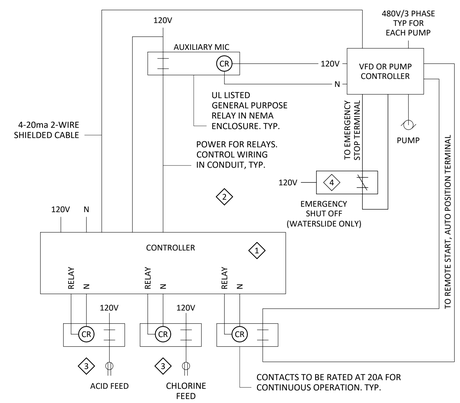

CONTROL WIRING DIAGRAM

N.T.S.

3

DETAIL NOTES:

1. UNDERWATER LIGHT JUNCTION BOXES TO BE HYDREL JB1710, HEAVY CAST BRONZE WITH SILICONE GASKETS AND INTEGRAL GROUNDING LUGS. RUN 1" DIAMETER SCHEDULE 40 PVC CONDUIT FROM LIGHT TO JUNCTION BOX AT DECK THEN TO BLANK FACE G.F.I. DEVICE WHEN SHOWN.
2. BOND NICHE TO JUNCTION BOX WITH #8 INSULATED COPPER WIRE WITHIN CONDUIT PER N.E.C. SECTION 680.
3. BOND NICHE TO REBAR WITH #8 CONTINUOUS SOLID COPPER WIRE PER N.E.C. SECTION 680.
4. LIGHT CORD LENGTH 150'-0" (MAXIMUM).
5. PROVIDE WIDE SWEEPS ON BENDS WITH A TOTAL OF NO MORE THAN 270 DEGREES. ALL BENDS SHALL HAVE A MINIMUM 36" RADIUS.
6. CORD WRAP TO FACILITATE BULB CHANGE OUT ON DECK. CORD MUST BE LONG ENOUGH SO LIGHT CAN BE PLACED ON DECK 2 FEET FROM EDGE.
7. U.L. APPROVED WET NICHE UNDERWATER LIGHT WITH 1" HUB CONNECTION AND DRAINAGE HOLES IN FACE OF RING OF LIGHT. INSTALLED IN ACCORDANCE WITH NEC ART. 680 - 23.
8. USE 3M SCOTCHCAST POTTING KIT 2135 IN THE FORMING SHELL AND JUNCTION BOX.
9. PROVIDE A STRAIN RELIEF AT JUNCTION BOX FOR UNDERWATER LIGHT FIXTURE CORD.

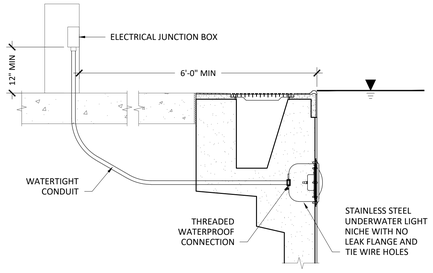

UNDERWATER LIGHT RIMMING

N.T.S.

2

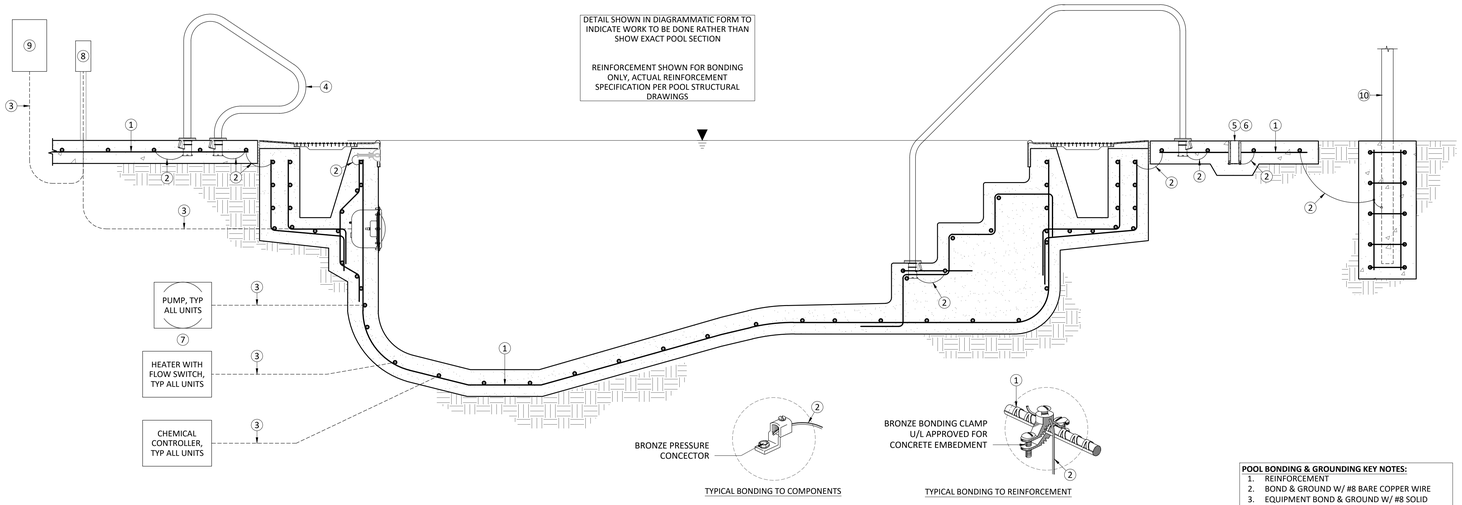

POOL BONDING & GROUNDING GENERAL NOTES:

A. POOL CONTRACTOR SHALL BE RESPONSIBLE FOR BONDING AND GROUNDING ALL EQUIPMENT AND METAL ITEMS IN OR NEAR THE POOL, INCLUDING: LIGHTS, NICHES, RAILINGS, ADA LIFT ANCHORS, REINFORCING STEEL, ETC. WITH A GROUND WIRE AS INDICATED. ALL BONDING SHALL BE PERFORMED IN ACCORDANCE WITH CEC.
B. POOL CONTRACTOR SHALL PROVIDE CONDUIT AND SUFFICIENT LENGTH OF CORD FROM EACH UNDERWATER LIGHT TO ITS J-BOX AND TO ALLOW FOR LIGHT TO REACH DECK FOR RE-LAMPING.
C. POOL CONTRACTOR SHALL PROVIDE AND INSTALL (PER 2022 CEC) AN EMERGENCY SHUT-OFF SWITCH.
D. ELECTRICAL WIRING OR CONDUCTORS SHALL NOT BE ROUTED UNDERGROUND BENEATH THE POOL SHELL.
E. NO OUTLETS SHALL BE LOCATED WITHIN 10 FT OF POOL. ALL OUTLETS 10 FT TO 20 FT FROM POOL TO BE GFCI PROTECTED. GFCI PROTECTION MUST BE PROVIDED PER CEC AND IN COMPLIANCE WITH LOCAL CODES FOR ALL LIGHTING CIRCUITS, MOTORS, EQUIPMENT, OUTLETS, AND ELECTRICAL CIRCUITS IN THE POOL AREA.
F. ELECTRICAL CONTRACTOR SHALL PROVIDE ELECTRICAL SERVICE AND CONNECTIONS TO ALL PUMP MOTORS, CIRCUIT BREAKERS, DISCONNECTS, PANELS, RELAYS, CONTROLLERS, HEATERS, OR OTHER POOL EQUIPMENT IN EQUIPMENT ROOM.
G. PROVIDE FLOW SWITCH WITH HEATER(S) TO INTERLOCK THE CIRCULATION PUMP WITH THE CHEMICAL FEEDERS AND WITH THE HEATER.
H. ELECTRICAL CONTRACTOR SHALL PROVIDE CONDUIT FROM J-BOX TO LIGHT NICHE AND PROVIDE JUNCTION BOX AND HOOK UP.
I. ELECTRICAL CONTRACTOR SHALL PROVIDE LIGHT SWITCHES FOR UNDERWATER LIGHTS IN A LOCATION WHERE THEY ARE NOT ACCESSIBLE BY BATHERS. (SWITCH LOCATION DETERMINED BY OWNER / ARCHITECT).

POOL BONDING & GROUNDING KEY NOTES:

1. REINFORCEMENT
2. BOND & GROUND W/ #8 BARE COPPER WIRE
3. EQUIPMENT BOND & GROUND W/ #8 SOLID COPPER CONDUCTOR INSULATED
4. GRAB RAILS, DIVING STANDS, AND OTHER SIMILAR ITEMS WHERE OCCURS
5. ADA LIFT ANCHOR, POST STANCHION, & PLATFORM ANCHORS
6. BOND & GROUND ALL METAL COMPONENTS (INCLUDING DECK DRAINS) WITHIN 5' OF POOL W/ #8 BARE COPPER WIRE, TYP
7. ANY METAL PARTS OF ELECTRICAL EQUIPMENT (PUMPS, HEATERS, CHEMICAL CONTROLLERS, AND EQUIPMENT ANCHORS) IN CONTACT WITH POOL WATER CIRCULATION SHALL BE BOND & GROUNDED TO POOL SHELL
8. GROUND BUS IN POOL J-BOX, TYP ALL UNITS
9. GROUND BUSS IN POOL PANEL
10. FENCE POST

TYPICAL POOL BONDING & GROUNDING

1

ELECTRICAL SPECIFICATIONS:

A. CODES: ALL WORK SHALL COMPLY WITH THE LATEST EDITION OF THE CALIFORNIA ELECTRICAL CODE (CEC), ALL STATE AND LOCAL BUILDING CODES, ALL ADOPTED ORDINANCES, AND ALL REQUIREMENTS OF THE UTILITY COMPANY.
B. RACEWAY:
1. INDOOR:
a. EMT (ELECTRICAL METALLIC TUBING)
b. IMC (INTERMEDIATE METALLIC CONDUIT)
2. OUTDOOR:
a. ABOVE GROUND: GRC (GALVANIZED RIGID CONDUIT)
b. FLEXIBLE: LIQUIDTIGHT FLEXIBLE METAL CONDUIT SHALL BE USED IN ALL APPLICATIONS WHERE FLEXIBILITY IS REQUIRED. MAXIMUM 6 FEET IN LENGTH. FLEXIBLE METAL CONDUIT IS NOT ACCEPTABLE UNLESS IT IS A PART OF A PRE-WIRED ASSEMBLY. FLEXIBLE NONMETALLIC CONDUIT SHALL NOT BE USED.
c. CONDUIT RUNS INSIDE BUILDING SHALL BE CONCEALED WHERE POSSIBLE. CONDUIT BELOW FLOOR SLAB SHALL BE INSTALLED WITHIN OR BELOW SLAB AND INSTALLED PRIOR TO POUR. RUNS TO BE AS STRAIGHT AS POSSIBLE FROM POINT OF OUTLET TO POINT OF OUTLET.
3. FURNISH 3/4" CONDUIT FOR ALL TEMPERATURE SENSORS FROM SENSOR TO APPROPRIATE MECHANICAL EQUIPMENT. PROVIDE 4" SQUARE JUNCTION BOX AT 48" AFF.
4. SUPPORTING DEVICES:
a. CHANNEL AND ANGLE SUPPORT SYSTEMS, HANGERS, ANCHORS, PRIOR BRACKETS, FABRICATED ITEMS, AND FASTENERS SHALL PROVIDE SECURE SUPPORT FROM THE BUILDING STRUCTURE FOR ELECTRICAL COMPONENTS. ALL SUPPORTS SHALL CONFORM TO SEISMIC ZONE REQUIREMENTS OF THE LOCAL AUTHORITY HAVING JURISDICTION. LIGHT FIXTURES SHALL BE SUPPORTED IN ACCORDANCE WITH CEC.
b. MATERIAL: ALL STEEL, PROTECTED FROM CORROSION WITH ZINC COATING (GALVANIZED) OR TREATMENT OF EQUIVALENT CORROSION-RESISTANT ALTERNATIVE FINISH.
5. FIRESTOPPING: APPLY TO CABLE AND RACEWAY PENETRATIONS OF FIRE-RATED FLOOR AND WALL ASSEMBLIES. PERFORM FIRESTOPPING TO RE-ESTABLISH THE ORIGINAL FIRE-RESISTANCE RATING OF THE ASSEMBLY AT THE PENETRATION.
6. INSTALL RACEWAYS LEVEL AND SQUARE AND AT PROPER ELEVATIONS. PROVIDE ADEQUATE HEADROOM. USE TEMPORARY CLOSURES TO PREVENT FOREIGN MATTER FROM ENTERING RACEWAY. KEEP RACEWAYS AT LEAST 6" AWAY FROM PARALLEL RUNS OF FLUES AND HOT WATER PIPES. INSTALL HORIZONTAL RACEWAY RUNS ABOVE WATER PIPING.
7. MINIMUM CONDUIT SIZE: 3/4" BELOW GRADE, 3/4" ABOVE GRADE
C. WIRE (50 TO 600 VOLTS): ALL WIRE SHALL COMPLY WITH THE FOLLOWING REQUIREMENTS:
1. INSULATING RATING:
a. VOLTAGE: 600 VOLTS
b. TEMPERATURE: 90° (THHN OR THWN)
2. STRANDED COPPER WITH THE FOLLOWING EXCEPTION(S): SOLID WIRE (SIZES #12 AND #10) MAY BE USED FOR OUTLETS AND LIGHTING. #8 SOLID BARE COPPER FOR GROUNDING AND BONDING OF NON-ELECTRIFIED METAL COMPONENTS ONLY.
3. MINIMUM SIZE:
a. POWER WIRING - #12 AWG
b. CONTROL WIRING - #14 AWG
4. WIRING INSTALLATION
a. ALL FEEDERS, BRANCH CIRCUITS AND VOLTAGE DROP REQUIREMENTS SHALL CONFORM TO CEC 210 AND 220.
b. ALL WIRING SHALL BE INSTALLED IN AN APPROVED RACEWAY SYSTEM IN ACCORDANCE WITH CEC AND LOCAL ORDINANCES.
D. ENCLOSURES:
1. FOR STARTERS, DISCONNECTS AND PANELBOARDS:
a. INDOOR: NEMA 4X
b. OUTDOOR: NEMA 3R
2. CONTROL PANELS (FULL PIANO HINGED):
a. INDOOR: NEMA 4X
b. OUTDOOR: NEMA 3R
3. CONTROL STATIONS:
a. INDOOR AND OUTDOOR: NEMA 4 OILTIGHT
4. REFER TO CEC IN AREAS WHERE CERTAIN CONDITIONS MUST BE MET.
5. MOUNTING HEIGHTS:
a. MOUNT TOP OF PANELS AND SWITCHES 66" AFF.
b. MOUNT TOP OF RECEPTACLE BOXES 15" AFF UON
c. OUTLET MOUNTING HEIGHTS FOR RECEPTACLES, SWITCHES, SYSTEM INITIATING DEVICES, AND INDICATING DEVICES SHALL COMPLY WITH REQUIREMENTS OF THE AMERICANS WITH DISABILITIES ACT (ADA)
E. GROUNDING:
1. ALL GROUNDING SHALL BE INSTALLED PER THE CEC AS SHOWN IN THE CONTRACT DRAWINGS AND SPECIFICATIONS.
2. ALL METALLIC STRUCTURES, METALLIC ENCLOSURES, AND ELECTRICAL EQUIPMENT SHALL BE PERMANENTLY, AND EFFECTIVELY GROUNDED AND GROUND CONNECTIONS SHALL BE MADE TO THE BUILDING GROUND. SIZE GROUND WIRE PER CEC 250.
F. GROUNDING/BONDING VERIFICATION
1. BONDING SYSTEM INSPECTION
a. CONTRACTOR TO PERFORM A REVIEW OF THE POOL BONDING SYSTEM AND NOTE ALL EQUIPMENT THAT NEEDS TO BE TESTED TO ENSURE THAT IT'S PROPERLY BONDED.
2. VERIFY THAT ALL METAL PARTS ARE BONDED TO THE SERVICE NEUTRAL.
a. CONTRACTOR TO MEASURE THE RESISTANCE BETWEEN THE METER SOCKET ENCLOSURE, SERVICE EQUIPMENT, OR GROUNDING ELECTRODE CONDUCTOR TO ALL METAL PARTS OF THE ELECTRICAL SYSTEM AND POOL THAT ARE REQUIRED TO BE BONDED. THE RESISTANCE THAT IS MEASURED SHOULD BE NO MORE THAN ONE OHM (AFTER THE METER HAS BEEN RECALIBRATED TO ACCOUNT FOR THE RESISTANCE OF WIRE USED FOR THE MEASUREMENTS). IF THE RESISTANCE FROM THE SERVICE NEUTRAL TO ANY METAL PART IS NOT LESS THAN ONE OHM, INVESTIGATE WHY AND CORRECT.
3. VERIFY THAT A POOL SHELL IS BONDED TO THE SERVICE NEUTRAL.
a. CONTRACTOR TO DETERMINE THE NEUTRAL-TO-EARTH VOLTAGE BY PLACING ONE LEAD OF THE VOLT METER TO THE METER SOCKET ENCLOSURE, SERVICE EQUIPMENT, OR GROUNDING ELECTRODE CONDUCTOR, AND THE OTHER LEAD TO A POINT IN THE EARTH THAT IS AT LEAST 15 FT FROM ANY METAL PARTS IN THE EARTH. THIS VOLTAGE READING SHOULD BE LESS THAN 3 VOLTS. THEN MEASURE THE VOLTAGE BETWEEN THE METER SOCKET ENCLOSURE, SERVICE EQUIPMENT, OR GROUNDING ELECTRODE CONDUCTOR TO THE WATER IN THE POOL AT FOUR DIFFERENT LOCATIONS. IF THE VOLTAGE IS ZERO AT ALL LOCATIONS, THEN THE POOL SHELL BONDING IS ACCEPTABLE. IF VOLT READING IS NOT ZERO, CORRECT.
4. VERIFY THAT THE PERIMETER DECKING AROUND THE POOL IS BONDED TO THE SERVICE NEUTRAL.
a. CONTRACTOR TO DETERMINE THE NEUTRAL-TO-EARTH VOLTAGE BY PLACING ONE LEAD OF THE VOLT METER TO THE METER SOCKET ENCLOSURE, SERVICE EQUIPMENT, OR GROUNDING ELECTRODE CONDUCTOR, AND THE OTHER LEAD TO A POINT IN THE EARTH THAT IS AT LEAST 15 FT FROM ANY METAL PARTS IN THE EARTH. THE VOLTAGE READING SHOULD BE LESS THAN 3 VOLTS. MEASURE THE VOLTAGE BETWEEN THE METER SOCKET ENCLOSURE, SERVICE EQUIPMENT, OR GROUNDING ELECTRODE CONDUCTOR TO THE PERIMETER DECKING TO AT LEAST SIX POINTS (6, 12, 18, 24, 30, AND 36 INCHES FROM THE POOL WATER) AT TWO LOCATIONS AROUND THE POOL. IF VOLT READING IS NOT ZERO, CORRECT.
G. WIRING DEVICES AND COMPONENTS:
1. STARTERS AND CONTACTORS: TO BE NEMA OR IEC RATED (NO GENERAL PURPOSE).
2. ALL PANELS SHALL BE OF COPPER BUS CONSTRUCTION INCLUDING COPPER BUS AND NEUTRAL BARS.
3. ALL RECEPTACLES AND SWITCHES SHALL BE COMMERCIAL GRADE WITH 20A RATING.
4. ALL RECEPTACLE AND SWITCH COVERS SHALL BE WHITE AND STANDARD COMMERCIAL GRADE.
5. EQUIPMENT STARTERS AND RELATED CONTROL AND WIRING SHALL BE SUPPLIED AND INSTALLED BY THE ELECTRICAL CONTRACTOR. OVERLOAD HEATERS SHALL BE INSTALLED IN ACCORDANCE WITH NAMEPLATE DATA ON EQUIPMENT. STARTERS SHALL BE INSTALLED AS DIRECTED BY THE POOL CONTRACTOR.
6. ALL DISCONNECT SWITCHES SHALL BE HEAVY-DUTY WITH DUAL ELEMENT TIME DELAY FUSES AS NOTED ON THE ONE-LINE DIAGRAM. FUSE SIZE TO BE AS SHOWN OR AS REQUIRED TO MATCH LOAD CONDITIONS.
H. MISCELLANEOUS AND GENERAL
1. NO SPLICES SHALL BE ALLOWED UNLESS EXEMPTED PER CEC. CONFIRM WITH ENGINEER.
2. THE ELECTRICAL DRAWINGS ARE NOT TO BE USED FOR ROOM DIMENSIONS AND EQUIPMENT PLACEMENT. REFERENCE THE APPROPRIATE ARCHITECTURAL, STRUCTURAL OR MECHANICAL PLANS, DRAWINGS OR SCHEMATIC. VERIFY ALL LOCATIONS WITH ENGINEER BEFORE INSTALLING CONDUIT, EQUIPMENT, ETC.
3. IT IS THE RESPONSIBILITY OF THE POOL CONSTRUCTION AND ELECTRICAL CONTRACTOR TO FAMILIARIZE HIMSELF WITH THE INSTALLATION AND TO ENSURE IT IS PROPER FOR ANY GIVEN SITUATION WHICH MAY VARY FROM THE DETAILS OR THE DRAWINGS. CONTRACTORS ARE ADVISED TO COMPLETELY SURVEY THE WORK AREA TO IDENTIFY ANY UPCOMING PROBLEMS.
4. COORDINATE MOUNTING HEIGHT OF ALL EXTERIOR LIGHTING FIXTURES WITH ARCHITECTURAL ELEVATION DRAWINGS.
5. ELECTRICAL CONTRACTOR SHALL ARRANGE FOR ALL INSPECTIONS WHEN THEY BECOME DUE AND SHALL NOT COVER ANY WORK UNTIL APPROVED BY THE INSPECTION AUTHORITY.
6. ANY AND ALL FEES ASSOCIATED WITH THE ELECTRICAL WORK INCLUDING CONSTRUCTION AND INSPECTIONS SHALL BE PAID FOR BY THE ELECTRICAL CONTRACTOR IN ORDER TO DELIVER AND COMPLETE THE FINISHED BUILDING, READY FOR OCCUPANCY AND 100% USAGE.
7. ANY COSTS DUE TO THE LACK OF COOPERATION AMONG TRADES SHALL BE THE RESPONSIBILITY OF THE CONTRACTOR.
8. REFER TO THE LATEST ARCHITECTURAL DRAWINGS FOR EXACT WALL LOCATIONS, DIMENSIONS, AND CONFIGURATIONS: DOOR SWINGS FOR SWITCH LOCATION, REFLECTED CEILING PLANS FOR LIGHT FIXTURE LOCATIONS.
9. ELECTRICAL CONTRACTOR SHALL FIELD VERIFY ALL ELECTRICAL EQUIPMENT LOADS PRIOR TO ROUGH-IN AND SHALL NOTIFY THE ENGINEER IF ANY DISCREPANCIES EXIST.
10. ELECTRICAL CONTRACTOR SHALL NOTIFY THE ENGINEER OF ANY ALTERATIONS REQUIRED BY THE OWNER, ARCHITECT, OR FIELD CONDITIONS.
11. ALL EQUIPMENT SHALL BE NEW AND SHALL HAVE APPROPRIATE UNDERWRITERS LABORATORIES (UL) LABEL AND SHALL CONFORM TO THE LATEST INDUSTRY STANDARDS.
12. ELECTRICAL CONTRACTOR SHALL MAINTAIN ALL WORKING CLEARANCES FOR ALL ELECTRICAL EQUIPMENT PER CEC REQUIREMENTS.
13. AT THE COMPLETION OF WORK, THE ELECTRICAL CONTRACTOR SHALL PROVIDE COMPLETE, ACCURATE, TYPED PANELBOARD DIRECTORIES, AND AS-BUILT DRAWINGS.
14. ANY DEVIATION FROM PLANS WITHOUT PRIOR APPROVAL OF THE ARCHITECT/ENGINEER SHALL BE CAUSE FOR REJECTION OF MATERIALS AND/OR METHODS AND ANY COSTS INCURRED TO CORRECT SUCH DEVIATION TO THE SATISFACTION OF THE ARCHITECT/ENGINEER SHALL BE THE CONTRACTOR'S RESPONSIBILITY.
15. COST TO INSTALL TEMPORARY POWER AND LIGHTING PER OSHA STANDARDS AND TEMPORARY POWER TO CONSTRUCTION TRAILER SHALL BE INCLUDED IN ELECTRICAL CONTRACTOR'S BID.
16. ALL DIMENSIONS ARE FROM FINISHED FLOOR OR FACE OF STUD TO CENTER OF DEVICE UNLESS OTHERWISE NOTED.
17. REFER TO ARCHITECTURAL AND MECHANICAL DRAWINGS FOR LOCATION OF THERMOSTATS AND OTHER SPECIAL EQUIPMENT OR CONTROLS. ELECTRICAL CONTRACTOR IS RESPONSIBLE FOR INSTALLATION OF ALL CONDUITS, JUNCTION BOXES, POWER/CONTROL WIRING, DISCONNECT SWITCHES, AND THERMOSTAT JUNCTION BOXES.

COUNTY OF FRESNO ENVIRONMENTAL HEALTH DIVISION
1221 Fulton Street - 3rd Floor (559) 600-3357
APPROVED
WITH NOTED CORRECTIONS AND
SUBJECT TO FIELD INSPECTIONS
DATE 8/26/25
BY
APPROVAL OF THIS PLAN DOES NOT CONSTITUTE PERMISSION TO VIOLATE ANY APPLICABLE CITY OR COUNTY ORDINANCE, OR STATE LAW, AND SHALL NOT PREVENT THIS DEPARTMENT FROM REQUIRING CORRECTION OF ERRORS OR OMISSIONS IN PLANS, SPECIFICATIONS OR CONSTRUCTION.

AGD
ARCHITECTURE | DESIGN

ANDREW GOODWIN DESIGNS
1238 MONTEREY STREET
SAN LUIS OBISPO, CA 93422
t: (805) 439-1611
www.andrewgoodwin.us

RSM
Design | Engineering
ROGERS STRINGER MCCLELLAND
1981 N. BROADWAY, SUITE 202
WALNUT CREEK, CA 94596
PH. (925) 217-6619
www.rsm-de.com

These drawings are instruments of service and are the property of Andrew Goodwin Designs, Inc. The information represented on these drawings are exclusively for the project indicated and shall not be transferred or otherwise reproduced without express written permission of Andrew Goodwin. Copyright 2023

SEAL

NOT FOR CONSTRUCTION

PROJECT

TRANQUILLITY HIGH SCHOOL
AQUATIC CENTER MODERNIZATION
6052 Juanche Ave,
Tranquillity, CA 93668

CLIENT

GOLDEN PLAINS UNIFIED SCHOOL DISTRICT

SHEET TITLE

SWIMMING POOL ELECTRICAL NOTES

PHASE DESCRIPTION
100% CD FCHD APPROVAL
SWIMMING POOL

DATE: 8/26/2025

TECHNICIAN: RD

PROJECT MANAGER: BR

JOB NUMBER: 791

SHEET NUMBER
SP5.0-1

PLOT DATE: 4/24/2025 3:26:20 PM

Copyright © **2025** RSM, Inc.-All Rights Reserved-This document was prepared for use only by the client, only for the purposes stated, and within a reasonable time from issuance. Non-commercial, educational, and scientific use of this document by regulatory agencies is regarded as a "fair use" and not a violation of copyright. Regulatory agencies may make additional copies of this document for internal use. Copies may also be made available to the public as required by law. The reprint must acknowledge the copyright and indicate that permission to reprint has been received.

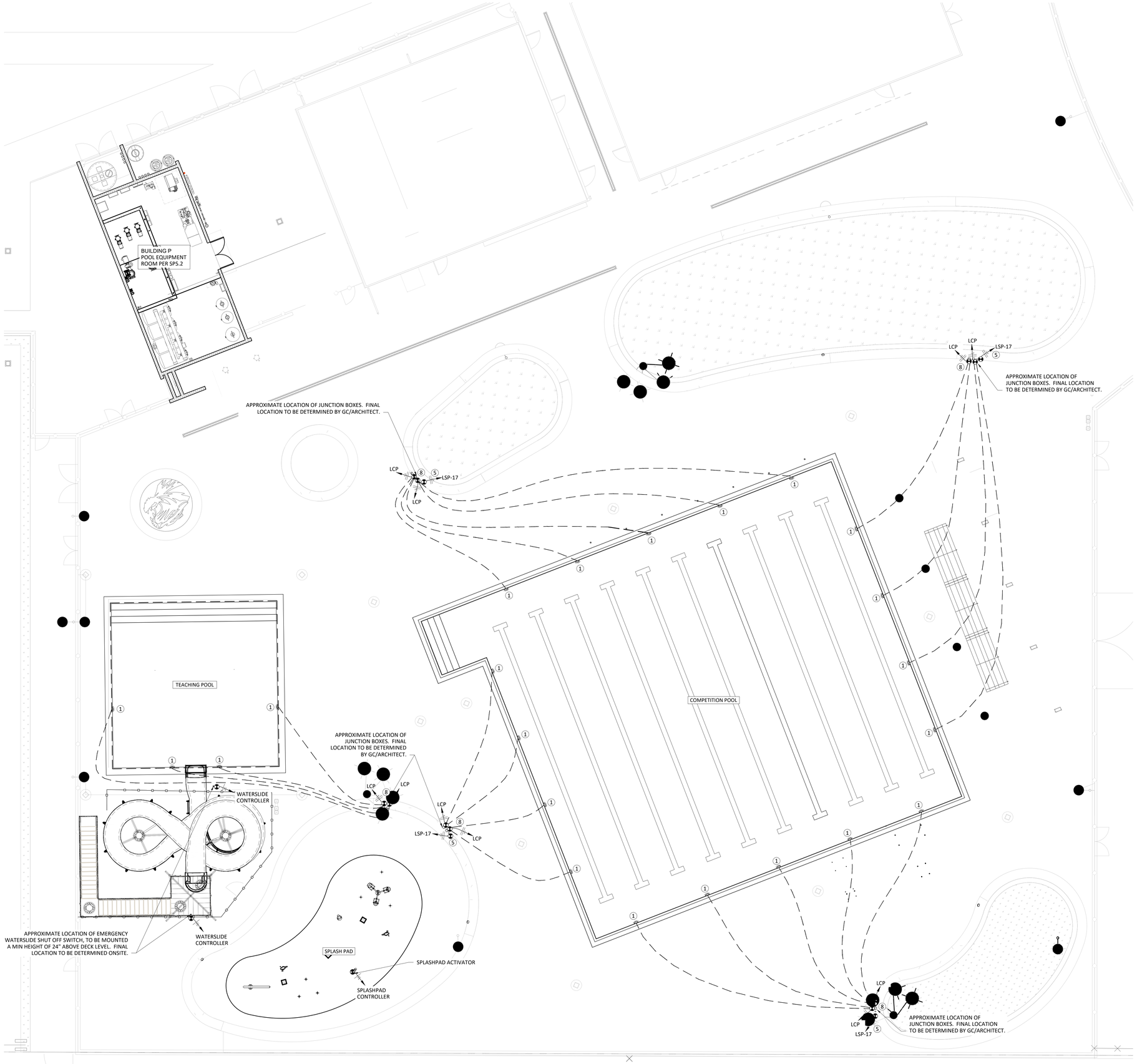

POOL DECK ELECTRICAL NOTES:

GENERAL

1. ELECTRICAL WIRING OR CONDUCTORS SHALL NOT BE ROUTED UNDERGROUND BENEATH THE POOL SHELL.
2. ELECTRICAL INSPECTOR SHALL APPROVE BONDING OF REINFORCING POOL FITTINGS AND CONDUIT PRIOR TO THE INSTALLATION OF REINFORCING STEEL FOR POURING OF CONCRETE OR GUNITE.
3. BONDING OF ALL POOL EQUIPMENT AND CONSTRUCTION SHALL BE INSTALLED PER REQUIREMENTS OF CEC 680.6 AND 680.26.
4. ALL METAL PARTS IN THE SWIMMING POOL AREAS AND EQUIPMENT ROOM SHALL BE GROUND BONDED WITH #8 SOLID BARE COPPER INCLUDING BUT NOT LIMITED TO ALL PUMPS, HEATERS, POOL AND LIGHTS, LADDERS, HAND RAILS, AND REBAR PER REQUIREMENTS OF CEC 680.6 AND 680.26.
5. NO OUTLETS SHALL BE LOCATED WITHIN 10 FT OF POOL. ALL OUTLETS 10 FT TO 20 FT FROM POOL TO BE GFCI PROTECTED. GFCI PROTECTION MUST BE PROVIDED PER CEC AND IN COMPLIANCE WITH LOCAL CODES FOR ALL LIGHTING CIRCUITS, MOTORS, EQUIPMENT, OUTLETS, AND ELECTRICAL CIRCUITS IN THE POOL AREA.

POOL LIGHTING

6. POOL LIGHT FIXTURES SHALL BE INSTALLED PER THE REQUIREMENTS OF CEC 680.23 FOR UNDERWATER LIGHTING FIXTURES.
7. PROVIDE UNDERWATER LIGHT FIXTURE WITH THREADED ENTRIES PER POOL EQUIPMENT DRAWINGS. BRANCH TO BE 2#12 THWN-2 CU AND #8G CU INSULATED IN 1" C. ALL CONDUIT ELECTRICAL CONNECTIONS TO LIGHT FIXTURES SHALL BE WATERTIGHT. CONDUIT SHALL BE NON-METALLIC PVC OR SEAL-TYPE WITH THREADED ENDS. PROVIDE TRANSFORMER FOR EACH SET OF THREE LIGHTS PER MANUFACTURER'S WRITTEN INSTRUCTIONS. MAXIUM THREE 90-DEGREE ELBOWS FOR EACH JUNCTION BOX TO UL CONDUIT.
8. MAXIMUM ONE TRANSFORMER PER JUNCTION BOX. PROVIDE GROUNDED BUS IN EACH JUNCTION BOX. MINIMUM 12" AFF AND 5'-0" FROM POOL. ROUTE TO GROUND BUS BAR JUNCTION BOX. PROVIDE GROUND BUS BAR IN NEMA-4X 12" x 12" x 12" ENCLOSURE. PROVIDE #8 INSULATED CU CONNECTION TO PANEL. BOXES NOT TO SCALE ON DRAWING. LOCATIONS ARE APPROXIMATE.
9. POOL CONTRACTOR SHALL PROVIDE SUFFICIENT LENGTH OF CORD FROM EACH UNDERWATER LIGHT TO ITS J-BOX TO ALLOW FOR LIGHT TO REACH DECK FOR RE-LAMPING.
10. ROUTE TO POOL LIGHTING CONTROLLER SWITCH AND CONNECT AS REQUIRED FOR BYPASS LIGHTING CONTROL. PROVIDE ENGRAVED SWITCH PLATE "UNDERWATER POOL LIGHTING BYPASS". PROVIDE LIGHTING CONTROL PANEL (LCP) IN EQUIPMENT ROOM, EATON FIFTHLIGHT TECHNOLOGY RELAY PANEL FLT RPA 24R AND LOW VOLTAGE WALL SWITCHES WITH INDICATOR LIGHTS FOR MANUAL ON/OFF CONTROL OF THE UNDERWATER LIGHTS FOR EACH BODY OF WATER OR APPROVED EQUAL/ACUITY CONTROL BLUE BOX GR1416 LT ENC SM NE4 ENCLOSURE AND GR1416 LT INT 16MCL DTC DV D14 INTERIOR OR APPROVED EQUAL. PROVIDE INDIVIDUAL CONTROL SWITCHES FOR EACH POOL/SPA AS APPLICABLE.

COUNTY OF FRESNO ENVIRONMENTAL HEALTH DIVISION
1221 Fulton Street - 3rd Floor (559) 600-3357
APPROVED
WITH NOTED CORRECTIONS AND
SUBJECT TO FIELD INSPECTIONS
BY DATE: 8/26/25
APPROVAL OF THIS PLAN DOES NOT CONSTITUTE PERMISSION TO VIOLATE ANY APPLICABLE CITY OR COUNTY ORDINANCE, OR STATE LAW, AND SHALL NOT PREVENT THIS DEPARTMENT FROM REQUIRING CORRECTION OF ERRORS OR OMISSIONS IN PLANS, SPECIFICATIONS OR CONSTRUCTION.

AGD
ARCHITECTURE | DESIGN

ANDREW GOODWIN DESIGNS
1238 MONTEREY STREET
SAN LUIS OBISPO, CA 93422
t: (805) 439-1611
www.andrewgoodwin.us

RSM
Design | Engineering
ROGERS STRINGER MCCLELLAND
1981 N. BROADWAY, SUITE 202
WALNUT CREEK, CA 94596
PH. (925) 217-6619
www.rsm-de.com

These drawings are instruments of service and are the property of Andrew Goodwin Designs, Inc. The information represented on these drawings are exclusively for the project indicated and shall not be transferred or otherwise reproduced without express written permission of Andrew Goodwin. Copyright 2023

SEAL

NOT FOR CONSTRUCTION

PROJECT

TRANQUILLITY HIGH SCHOOL
AQUATIC CENTER MODERNIZATION
6052 Juanche Ave,
Tranquillity, CA 93668

CLIENT

GOLDEN PLAINS UNIFIED SCHOOL DISTRICT

SHEET TITLE

SWIMMING POOL ELECTRICAL SITE PLAN

PHASE DESCRIPTION
100% CD FCHD APPROVAL SWIMMING POOL

DATE: 8/26/2025
TECHNICIAN: RD
PROJECT MANAGER: BR
JOB NUMBER: 791

SHEET NUMBER
SP5.1-1

PLOT DATE: 4/24/2025 3:26:20 PM

SWIMMING POOL ELELCTRICAL SITE PLAN
1/8" = 1'-0"
1

Copyright © **2025** RSM, Inc.-All Rights Reserved-This document was prepared for use only by the client, only for the purposes stated, and within a reasonable time from issuance. Non-commercial, educational, and scientific use of this document by regulatory agencies is regarded as a "fair use" and not a violation of copyright. Regulatory agencies may make additional copies of this document for internal use. Copies may also be made available to the public as required by law. The reprint must acknowledge the copyright and indicate that permission to reprint has been received.

PANEL 'LSP'

PANEL MAKE/MODEL: Eaton / Pow-R-Line 4X — ENCLOSURE : NEMA 4X
MAIN CIRCUIT BREAKER: 150A — MOUNTING : SURFACE
BUSSING : 200A — CB TYPE : BOLT-ON
VOLTAGE : 208/120V, 3PH, 4W — PROVIDE : NEUTRAL BUS
PANEL INTERRUPTING RATING : 10K — GROUND BUS

0 RECPT | 5 HEAT
1 LTG | 6 A/C
2 EQUIP | 7 KITCH
3 MTR | 8 ELEV
4 COMP | 9 125%

CKT	AMPS	POLE	CIRCUIT DESCRIPTION	LOAD	TYPE	PH	TYPE	LOAD	CIRCUIT DESCRIPTION	AMPS	POLE	CKT
1	20	1	CO2 STORAGE	1800	2	A	2	600	COMP. POOL HEATER	20	1	2
3	20	1	SUMP PUMP (1/3 HP)	1990	3	B	2	600	TEACHING POOL HEATER	20	1	4
5	20	1	FILTER BOOST PUMP (1/2 HP)	1990	3	C	2	1800	COMP. CHEMICAL CONTROLLER	20	1	6
7	20	1	FILTER CONTROLLER	600	2	A	2	1800	TEACHING CHEMICAL CONTROLLER	20	1	8
9	20	1	WATERSLIDE CONTROLLER	1200	2	B	2	1800	SPLASHPAD CHEMICAL CONTROLLER	20	1	10
11	20	1	SPLASHPAD CONTROLLER	1200	2	C	2	480	COMP. ACID PUMP (2)	20	1	12
13	30	1	SPLASHPAD UV	750	2	A	2	240	TEACHING ACID PUMP	20	1	14
15				750		B	2	240	SPLASHPAD ACID PUMP	20	1	16
17	20	1	PEDESTAL RECEPTACLES	720	0	C	2	480	COMP. CHLORINE PUMP (2)	20	1	18
19	20	1	LIGHTING CONTROL PANEL	1210	1	A	2	240	TEACHING CHLORINE PUMP	20	1	20
21	20	1	EQUIPMENT ROOM RECEPTACLES	720	0	B	2	240	SPLASHPAD CHLORINE PUMP	20	1	22
23	20	1	EQUIPMENT ROOM LIGHTING	500	1	C	2	2984	COMP. CO2 PUMP (3/4 HP)	20	1	24
25	20	1	TEACHING POOL HEATER AIR INTAKE	1000	0	A	2	600	COMP. CO2 CONTROLLER	20	1	26
27	20	1	SPARE	1000	0	B	2	240	TEACHING CO2 FEEDER	20	1	28
29	20	1	SPARE	1000	0	C	2	240	SPLASHPAD CO2 FEEDER	20	1	30
31			Bussed Space			A			Bussed Space			32
33			Bussed Space			B			Bussed Space			34
35			Bussed Space			C			Bussed Space			36
37			Bussed Space			A			Bussed Space			38
39			Bussed Space			B			Bussed Space			40
41			Bussed Space			C			Bussed Space			42

	ADDED VA	FEED THRU	METERED LOADx1.25	TOTAL CONN	TOTAL DEMAND VA	TOTAL DEMAND AMPS
PHASE A	8,840	0	0	8,840	8,974	75
PHASE B	8,780	0	0	8,780	8,912	74
PHASE C	11,394	0	0	11,394	11,566	96
TOTAL	29,013	0	0	29,013	29,452	82

NOTES :

1. All of the following to be provided with GFCI protection:
   a. Outdoor luminaries installed within 5-feet horizontally from the inside wall of pool. Such lights must be installed at least 5-feet above the pool water surface level.
   b. Outdoor luminaries installed in the area extending between 5- and 10-feet from the inside wall of pool.
   c. All underwater luminaries.
2. Conductors on the load side of a ground-fault circuit interrupter are permitted to occupy raceways, boxes, or enclosures containing only conductors protected by ground-fault circuit interrupters.
3. Grounding conductors are permitted in the same raceway, box or enclosure.
4. Conductors that supply pool equipment, such as pool pump motors that do not have GFCI protection, shall not be installed in the same conduits and junction and pull boxes with conductors having GFCI protection that supply underwater luminaires.
5. Electrical service to panel by others. Contractor to confirm and coordinate the electrical service voltage/phase serving the pool equipment room panel(s) and equipment before ordering any new panel(s) or pool electrical equipment. Consult engineer if there is a discrepancy between the electrical service and pool electrical panel(s) and pool equipment voltage/phase.

POOL ELECTRICAL PANEL "LSP" (3)
N.T.S.

PANEL 'MCP'

PANEL MAKE/MODEL: Eaton / Pow-R-Line 4X — ENCLOSURE : NEMA 4X
MAIN CIRCUIT BREAKER: 225A — MOUNTING : SURFACE
BUSSING : 225A — CB TYPE : BOLT-ON
VOLTAGE : 480/277V, 3PH, 4W — PROVIDE : NEUTRAL BUS
PANEL INTERRUPTING RATING : 35K — GROUND BUS

0 RECPT | 5 HEAT
1 LTG | 6 A/C
2 EQUIP | 7 KITCH
3 MTR | 8 ELEV
4 COMP | 9 125%

CKT	AMPS	POLE	CIRCUIT DESCRIPTION	LOAD	TYPE	PH	TYPE	LOAD	CIRCUIT DESCRIPTION	AMPS	POLE	CKT
1	50	3	COMP. POOL RECIRC. PUMP (20 HP W/VFD)	8650	3	A	3	6920	WATERSLIDE PUMP (15 HP W/VFD)	40	3	2
3				8650	3	B	3	6920				4
5				8650	3	C	3	6920				6
7	20	3	TEACHING POOL RECIRC. PUMP (5 HP W/VFD)	1857	3	A	3	1857	SPLASHPADFEATURE PUMP (5 HP W/VFD)	20	3	8
9				1857	3	B	3	1857				10
11				1857	3	C	3	1857				12
13	20	3	SPLASHPAD RECIRC. PUMP (5 HP W/VFD)	1857	3	A	2	1000	SPARE	20	1	14
15				1857	3	B	2	1000	SPARE	20	1	16
17				1857	3	C	2	1000	SPARE	20	1	18
19						A			Bussed Space			20
21						B			Bussed Space			22
23						C			Bussed Space			24

	ADDED VA	FEED THRU	METERED LOADx1.25	TOTAL CONN	TOTAL DEMAND VA	TOTAL DEMAND AMPS
PHASE A	22,141	0	0	22,141	22,141	80
PHASE B	22,141	0	0	22,141	22,141	80
PHASE C	22,141	0	0	22,141	22,141	80
TOTAL	66,422	0	0	66,422	66,422	80

POOL PUMP ELECTRICAL PANEL "MCP" (2)
N.T.S.

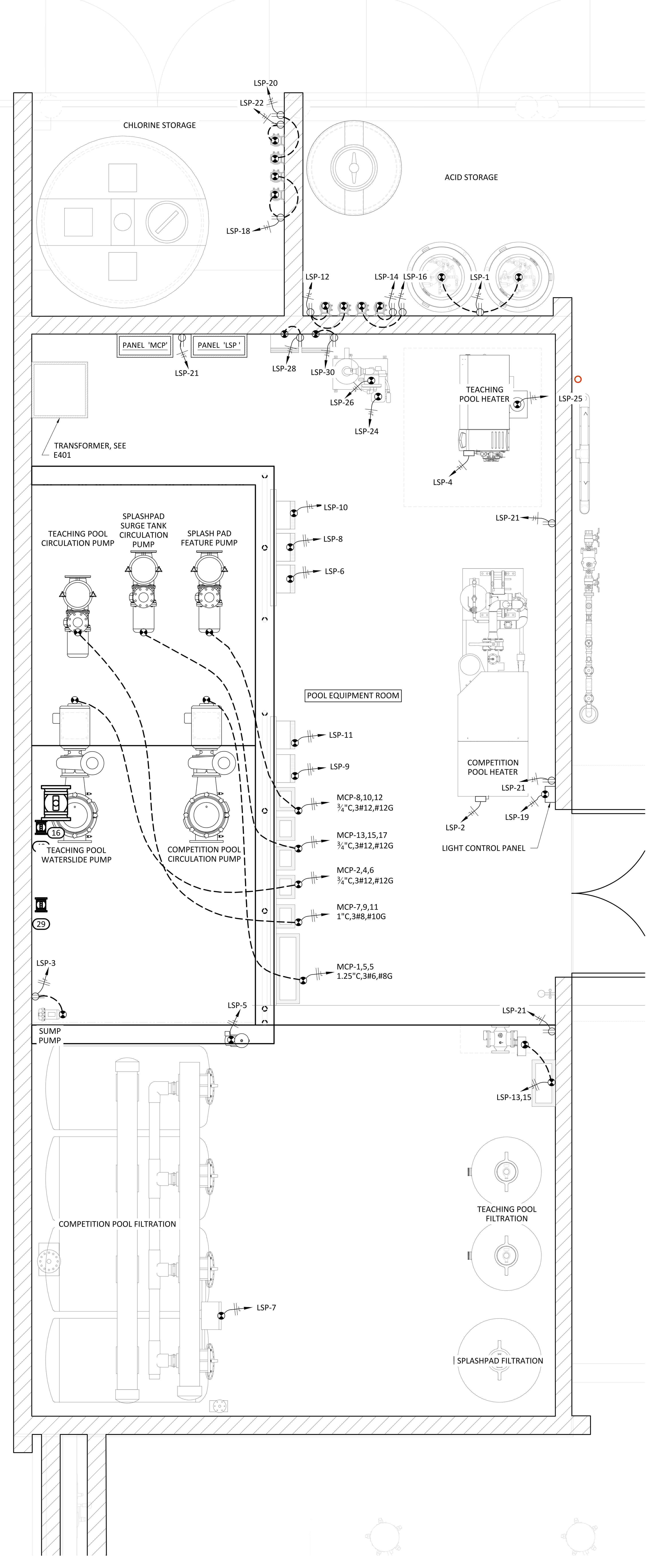

EQUIPMENT ROOM ELECTRICAL NOTES:

GENERAL:

A. ELECTRICAL SERVICE TO PANEL BY OTHERS. CONTRACTOR TO CONFIRM AND COORDINATE THE ELECTRICAL SERVICE VOLTAGE/PHASE SERVING THE POOL EQUIPMENT ROOM PANEL(S) AND EQUIPMENT BEFORE ORDERING ANY NEW PANEL(S) OR POOL ELECTRICAL EQUIPMENT. CONSULT ENGINEER IF THERE IS A DISCREPANCY BETWEEN THE ELECTRICAL SERVICE AND POOL ELECTRICAL PANEL(S) AND POOL EQUIPMENT VOLTAGE/PHASE.
   a. FOR RENOVATION PROJECTS UTILIZING AND/OR MODIFYING EXISTING PANELBOARD CIRCUITS, PRIOR TO ANY DEMOLITION OR NEW WORK, CONTRACTOR TO CONFIRM EXISTING PANELBOARD INDEX CIRCUITING UTILIZING ELECTRIC CIRCUIT TRACERS AND REPORT RESULTS TO ENGINEER FOR COMPARISON TO EXISTING CONDITIONS SHOWN ON THESE DRAWINGS.
   b. PANELBOARD IS TO BE AN EATON MODEL POW-R-LINE 4X PANELBOARD OR APPROVED EQUAL. COORDINATE PANEL REQUIREMENT WITH ANY BUILDING ELECTRICAL ENGINEERS/CONTRACTORS AS APPLICABLE.

B. ALL POWER CONDUCTORS TO BE 3/4"C, 2#12 OR 3#12 (1-OR 3-PHASE), #12G UNLESS OTHERWISE NOTED.
C. PROVIDE ALL REQUIRED LOW VOLTAGE CONTROL WIRING MIN 3/4"C, 2#4, #14G FOR, BUT NOT LIMITED TO, FLOW METERS, CHEMICAL CONTROL RELAY CIRCUITS, ETC. FOLLOW EQUIPMENT MANUFACTURERS' WRITTEN INSTRUCTIONS.
D. PROVIDE JUNCTION BOX AND WIRING FOR FLOW METERS PER MANUFACTURER'S LITERATURE.
E. ALL RECEPTACLES TO BE WATERPROOF AND GFCI. PROVIDE STANDS SECURED TO FLOOR SLAB FOR EXTERIOR INSTALLATIONS WITHOUT WALLS.
F. PROVIDE FLOW SWITCH WITH HEATER(S) TO INTERLOCK THE CIRCULATION PUMP WITH THE CHEMICAL FEEDERS AND WITH THE HEATER.
G. ELECTRICAL CONTRACTOR SHALL FIELD VERIFY THE LOCATION OF POOL WATER LEVEL SENSORS WITH POOL CONTRACTOR. LOW VOLTAGE CONTROL WIRING SHALL BE PROVIDED BY THE POOL CONSTRUCTION CONTRACTOR.
H. ELECTRICAL CONTACTORS WITH 120V COILS AND STARTERS WITH 120V COILS SHALL BE SUPPLIED AND INSTALLED BY THE ELECTRICAL CONTRACTOR.
I. STARTS, DISCONNECTS, PANELBOARDS, AND CONTROL PANELS INSIDE POOL EQUIPMENT ROOMS INCLUDING CHEMICAL STORAGE ROOMS TO BE NEMA 4X. ALL OUTDOOR STARTS, DISCONNECTS, PANELBOARDS, AND CONTROL PANELS TO BE NEMA 3R.
J. WHERE CONNECTING CONDUCTORS TO MOTOR TERMINALS, USE LIQUIDTITE CONDUIT (3' MAXIMUM) FROM THE RIGID CONDUIT TO THE MOTOR J-BOX.
K. ELECTRICAL CONTRACTOR SHALL PERFORM ALL FINAL POWER AND CONTROL WIRING, INCLUDING LOW VOLTAGE, TERMINATIONS AT POOL CONTROL PANEL, CONTROL J-BOX, PCP STARTER, EMERGENCY STOP PUSHBUTTON, TIMER AND WATER LEVEL SENSORS AS REQUIRED FOR PROPER NORMAL AND EMERGENCY SHUTDOWN OPERATION OF ALL PUMPS.

MARKINGS:

A. LABEL PANELS, CABINETS, DEVICES, CONTRACTORS, AND OTHER SPECIFICALLY DESIGNATED EQUIPMENT TO CLEARLY INDICATE THE FEEDING PANEL AND CIRCUIT NUMBER. FOR FEEDERS, LABEL CONDUIT DESIGNATIONS ON BOTH VISIBLE ENDS OF CONDUIT RUNS WHERE CONDUITS TERMINATE AT DESIGNED ENCLOSURES OR EQUIPMENT, INCLUDING PULL AND SPLICE BOXES.
B. PROVIDE LABELS FOR ALL EQUIPMENT POWERED BY RECEPTACLES.
C. ALL CONDUIT MARKED ON THESE PLANS AS REQUIRING PAINT SHALL HAVE THREE COATS OF PAINT: PRIMER AND TWO FINAL EPOXY COATS.

BONDING AND GROUNDING:

A. BONDING OF ALL POOL EQUIPMENT AND CONSTRUCTION SHALL BE INSTALLED PER REQUIREMENTS OF CEC 680.6 AND 680.26.
B. ALL METAL PARTS IN SWIMMING POOL AREAS AND EQUIPMENT ROOM SHALL BE GROUND BONDED WITH #8 SOLID BARE COPPER INCLUDING BUT NOT LIMITED TO ALL PUMPS, HEATERS, POOL AND LIGHTS, LADDERS, HAND RAILS, AND REBAR PER REQUIREMENTS OF CEC 680.6 AND 680.26.

COORDINATION:

A. EQUIPMENT ROOM LIGHTING BY OTHERS.
B. COORDINATE ALL WORK WITH OTHER ENGINEERS AND CONTRACTORS ON-SITE THAT ARE OUTSIDE BUT AFFECTED BY THIS SCOPE AS REQUIRED.
C. ELECTRICAL CONTRACTOR SHALL FIELD VERIFY LOCATION OF SWIMMING POOL LIGHT TOGGLE SWITCHES AND MAINTAIN CLEARANCES PER REQUIREMENTS OF CEC 680.22 AND EMERGENCY OFF TOGGLE SWITCH PER 680.41.
D. VENTILATE POOL CHEMICAL STORAGE AREAS PER LOCAL, STATE, AND INTERNATIONAL MECHANICAL CODE MINIMUMS. REFER TO MECHANICAL.
E. CORE DRILL FOR WALL-PENETRATIONS AS REQUIRED.

ELECTRICAL SYMBOLS LEGEND	
SYMBOL	DESCRIPTION
S	SINGLE POLE MOTOR RATED SWITCH, 48" HEIGHT
	SINGLE RECEPTACLE, 20A/240V/1Ø, 18" A.F.F.
	DUPLEX RECEPTACLE, 20A/120V/1Ø, 18" A.F.F.
	DISCONNECT SWITCH
	EQUIPMENT CONNECTION
	MOTOR BY OTHERS, CONTRACTOR CONNECTS
	HOMERUN W/ GROUND, NEUTRAL, HOT
	HOMERUN W/ GROUND, 2 HOTS
	HOMERUN W/ GROUND, 3 HOTS
(J)	JUNCTION BOX
ALL SYMBOLS MAY NOT APPEAR ON PLANS	

COUNTY OF FRESNO ENVIRONMENTAL HEALTH DIVISION
1221 Fulton Street – 3rd Floor (559) 600-3357
APPROVED
WITH NOTED CORRECTIONS AND SUBJECT TO FIELD INSPECTIONS
BY: ______ DATE: 8/26/25
APPROVAL OF THIS PLAN DOES NOT CONSTITUTE PERMISSION TO VIOLATE ANY APPLICABLE CITY OR COUNTY ORDINANCE, OR STATE LAW, AND SHALL NOT PREVENT THIS DEPARTMENT FROM REQUIRING CORRECTION OF ERRORS OR OMISSIONS IN PLANS, SPECIFICATIONS OR CONSTRUCTION.

EQUIPMENT ROOM ELECTRICAL PLAN (1)
1/2" = 1'-0"

AGD
ARCHITECTURE | DESIGN
ANDREW GOODWIN DESIGNS
1238 MONTEREY STREET
SAN LUIS OBISPO, CA 93422
t: (805) 439-1611
www.andrewgoodwin.us

RSM
Design | Engineering
ROGERS STRINGER MCCLELLAND
1981 N. BROADWAY, SUITE 202
WALNUT CREEK, CA 94596
PH. (925) 217-6619
www.rsm-de.com

These drawings are instruments of service and are the property of Andrew Goodwin Designs, Inc. The information represented on these drawings are exclusively for the project indicated and shall not be transferred or otherwise reproduced without express written permission of Andrew Goodwin. Copyright 2023

SEAL

NOT FOR CONSTRUCTION

PROJECT

TRANQUILLITY HIGH SCHOOL
AQUATIC CENTER MODERNIZATION
6052 Juanche Ave,
Tranquillity, CA 93668

CLIENT

GOLDEN PLAINS UNIFIED SCHOOL DISTRICT

SHEET TITLE

BUILDING P
EQUIPMENT ROOM
ELECTRICAL PLAN

PHASE DESCRIPTION
100% CD FCHD APPROVAL
SWIMMING POOL

DATE: 8/26/2025
TECHNICIAN: RD
PROJECT MANAGER: BR
JOB NUMBER: 791

SHEET NUMBER
SP5.2-1

PLOT DATE: 4/24/2025 3:26:20 PM

Copyright © 2025 RSM, Inc.-All Rights Reserved-This document was prepared for use only by the client, only for the purposes stated, and within a reasonable time from issuance. Non-commercial, educational, and scientific use of this document by regulatory agencies is regarded as a "fair use" and not a violation of copyright. Regulatory agencies may make additional copies of this document for internal use. Copies may also be made available to the public as required by law. The reprint must acknowledge the copyright and indicate that permission to reprint has been received.

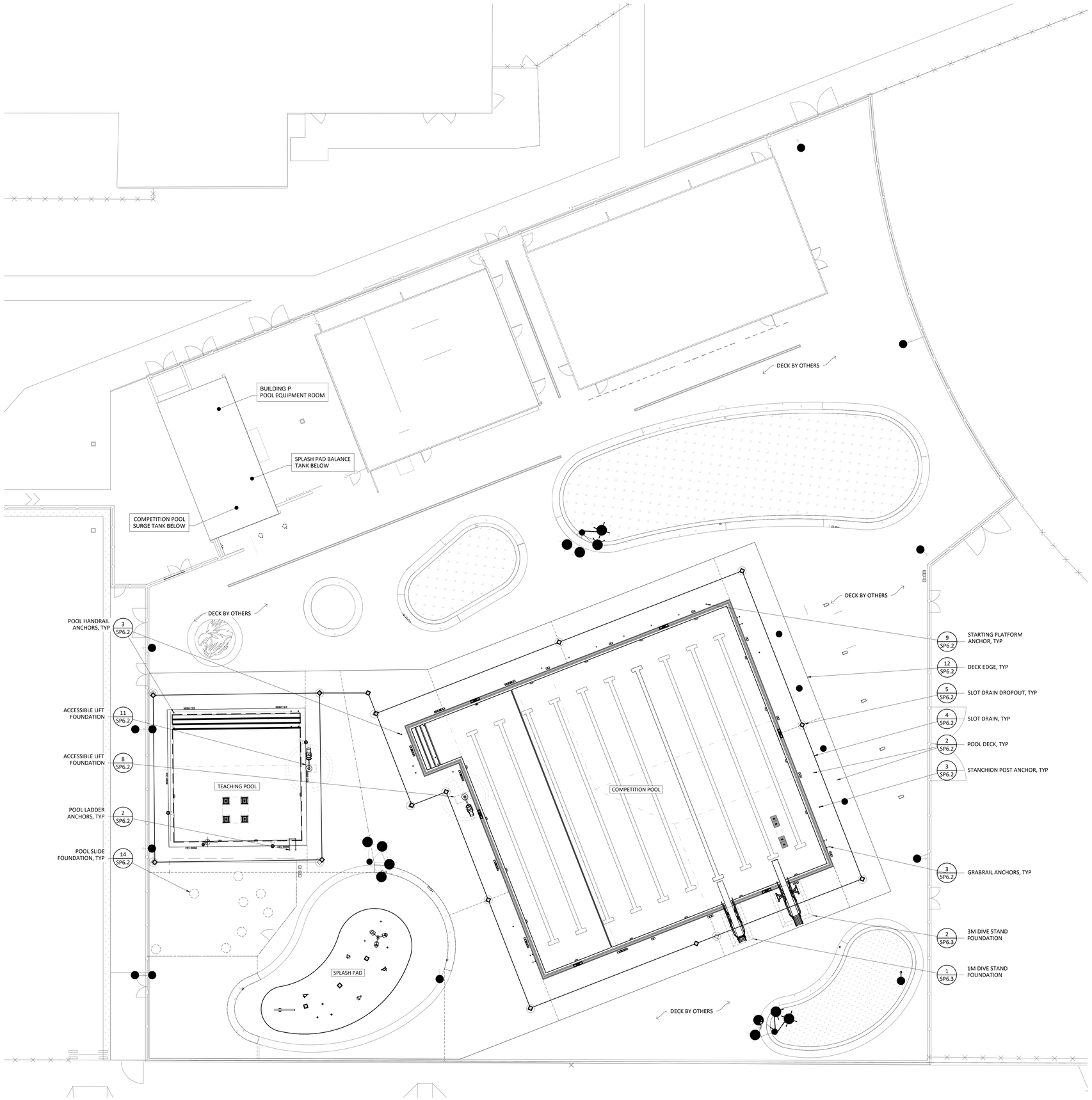

POOL DECK GENERAL NOTES:

1. THE POOL DECK SHALL BEAR ONTO FIRM SUITABLE SOIL OR AS DETERMINED BY THE PROJECT GEOTECHNICAL ENGINEER. SOILS SHALL BE MAINTAINED AT AN ELEVATED MOISTURE CONTENT DURING CONSTRUCTION AND IMMEDIATELY PRIOR TO CONCRETE PLACEMENT.
2. POOL DECK TO SLOPE NO GREATER THAN 2% TO A DRAINAGE SYSTEM AS SHOWN AND WITHIN THESE PLANS DRAINS.
3. FOR POOL DECK AREA DRAINAGE WASTE CONNECTION REFER TO EXISTING AS-BUILT DRAWINGS.
4. POOL DECK TO HAVE A MEDIUM BROOM FINISH. CONTRACTOR TO PROVIDE TEST PANELS PER WRITTEN SPECIFICATION AREA FOR OWNER AND ENGINEER APPROVAL OF FINISH PRIOR TO CONCRETE PLACEMENT. TEST PANELS SHALL HAVE AT LEAST ONE EXPANSION JOINT AND ONE CONTROL JOINT.
5. POOL DECK CONTROL JOINT PLAN PER ARCHITECTURAL DRAWINGS.

POOL DECK JOINT NOTES:

1. CONTRACTOR TO SUBMIT FOR ENGINEER REVIEW AND APPROVAL POOL DECK JOINT LAYOUT AND POUR SEQUENCE SUBMITTAL 3 MONTHS PRIOR TO CONCRETE PLACEMENT.
2. NO JOINTS SHALL TRAVERSE TILE OR EMBEDDED ANCHORS. CONTRACTOR TO RELOCATE JOINTS AS NEEDED, MAXIMUM 6".
3. EXPANSION JOINTS SHALL HAVE A MAXIMUM SPACING OF 100'-0" AND SHALL BE LOCATED TO REDUCE INTERNAL CORNERS.
4. EXPANSION JOINTS SHALL BE PLACED MINIMUM 6" AWAY FROM THE FACE OF UTILITY PEDESTALS.
5. EXPANSION JOINTS SHALL BE PLACED AROUND ALL SHADE STRUCTURE SLEEVES, COLUMNS, AND FOUNDATIONS WHERE THEY PENETRATE THE DECK.
6. CONTROL JOINTS SHALL HAVE A MAXIMUM SPACING OF 12'-0" AND SHALL CREATE PANELS WHOSE LENGTHS DO NOT EXCEED A 1.5:1 RATIO.
7. CONTROL JOINTS SHALL BE SAW CUT INTO THE CONCRETE SLAB TO A DEPTH OF ONE/FOURTH THE SLAB THICKNESS.
8. CONTROL JOINTS SHALL BE CUT AS SOON AS THE CONCRETE IS SUFFICIENTLY HARD TO RESIST TEARING, RAVELING, AND BEFORE RANDOM CRACKING OCCURS. APPROXIMATELY 1-4 HOURS AFTER FINISHING. TIMELINE FOR CUTTING CONTROL JOINTS SHOULD BE AS SOON AS THE CONCRETE IS HARD ENOUGH THAT SAWING DOES NOT RAVEL THE JOINT.

DESIGN BASIS:

1. 2023 CALIFORNIA BUILDING CODE (CBC)
2. GEOTECHNICAL INVESTIGATION BY TECHNICON PN: 240282.001 ON JUNE 12, 2024.

MATERIALS:

1. CONCRETE:
   - A. NORMAL WEIGHT CONCRETE SHALL BE MIXED AND PROPORTIONED IN ACCORDANCE WITH ACI 301.
   - B. MINIMUM COMPRESSIVE STRENGTH, F'C, SHALL BE 4,500 PSI @ 28 DAYS
   - C. SLUMP: 3" ± 1"
   - D. AGGREGATE: 1 INCH MAX
   - E. CEMENT CONTENT: 600 LBS/YDS MIN.
   - F. W/C RATIO: 0.45 MAX
   - G. TYPE V CEMENT SHALL BE USED
   - H. SHRINKAGE AT 28 DAYS (PER ASTM C-157) SHALL NOT EXCEED 0.055% FOR DRY CURING.
   - I. CONCRETE SHALL BE PLACED ON OR AGAINST FIRM UNDISTURBED SOIL.
   - J. CEMENT USED SHALL BE ASTM C150, TYPE V CEMENT.
2. REINFORCEMENT:
   - A. USE ACI 318 AS GUIDELINE.
   - B. REINFORCEMENT SHALL BE ASTM- A615 GRADE 60.
   - C. LAP SPLICES SHALL BE 60 BAR DIAMETERS.
   - D. 3" MIN COVER FOR REINFORCEMENT TO SOIL.
   - E. DECK DOWELS BETWEEN THE POOL AND ADJACENT DECKING SHALL NOT BE USED.
3. BOND BREAK:
   - A. SHALL CONSIST OF VISQUEEN BOND BREAK OR APPROVED EQUAL.
4. EXPANSION JOINT:
   - A. EXPANSION JOINT FILL MATERIAL SHALL BE "DECK-O-FOAM" EXPANSION JOINT FILLER, NON-STAINING CLOSED-CELL POLYETHYLENE. SAND MAY BE USED AS AN ALTERNATIVE.
   - B. EXPANSION JOINT BACKER ROD SHALL BE CLOSED CELL, NON-ABSORBENT COMPRESSIBLE MATERIAL MANUFACTURED FOR THE SPECIFIC PURPOSE OF CONTROLLING SEALANT DEPTH. BACKER ROD MAY BE OMITTED IF A BACKER ROD IS INTEGRATED INTO EXPANSION JOINT FILLER.
   - C. EXPANSION JOINT SEALANT SHALL BE "DECK-O-SEAL" GUN GRADE 2-PART JOINT SEALANT 2-PART POLYSULFIDE 2-COMPONENT CHEMICALLY CURED POLYSULFIDE RUBBER.

REQUIRED SPECIAL INSPECTIONS:

1. CONCRETE PLACEMENT INSPECTION.

REQUIRED TESTING:

1. CONCRETE COMPRESSION TESTS (1 SET/50 YDS)
2. COMPACTION TESTING OF SUBGRADE AND ANY FILL.

REQUIRED SPECIAL INSPECTIONS:

1. CONCRETE PLACEMENT INSPECTION.
2. COMPACTION TESTING OF SUBGRADE AND ANY FILL.

REQUIRED TESTING:

CONCRETE COMPRESSION TESTS (1 SET/50 YDS)

POOL DECK PLAN LEGEND

SYMBOL/LINE	DESCRIPTION
	EXPANSION JOINT
	SLOT DRAIN
◇	SLOT DRAIN CATCH BASIN

COUNTY OF FRESNO ENVIRONMENTAL HEALTH DIVISION
1221 Fulton Street – 3rd Floor (559) 600-3357
APPROVED WITH NOTED CORRECTIONS AND SUBJECT TO FIELD INSPECTIONS
BY: DATE: 8/26/25
APPROVAL OF THIS PLAN DOES NOT CONSTITUTE PERMISSION TO VIOLATE ANY APPLICABLE CITY OR COUNTY ORDINANCE, OR STATE LAW, AND SHALL NOT PREVENT THIS DEPARTMENT FROM REQUIRING CORRECTION OF ERRORS OR OMISSIONS IN PLANS, SPECIFICATIONS OR CONSTRUCTION.

POOL DECK PLAN
3/32" = 1'-0"
1

AGD
ARCHITECTURE | DESIGN

ANDREW GOODWIN DESIGNS
1238 MONTEREY STREET
SAN LUIS OBISPO, CA 93422
t: (805) 439-1611
www.andrewgoodwin.us

RSM
Design | Engineering
ROGERS STRINGER MCCLELLAND
1981 N. BROADWAY, SUITE 202
WALNUT CREEK, CA 94596
PH. (925) 217-6619
www.rsm-de.com

These drawings are instruments of service and are the property of Andrew Goodwin Designs, Inc. The information represented on these drawings are exclusively for the project indicated and shall not be transferred or otherwise reproduced without express written permission of Andrew Goodwin. Copyright 2023

SEAL

NOT FOR CONSTRUCTION

PROJECT

TRANQUILLITY HIGH SCHOOL
AQUATIC CENTER MODERNIZATION
6052 Juanche Ave,
Tranquillity, CA 93668

CLIENT

GOLDEN PLAINS UNIFIED SCHOOL DISTRICT

SHEET TITLE

POOL DECK PLAN

PHASE DESCRIPTION
100% CD FCHD APPROVAL
SWIMMING POOL

DATE: 8/26/2025
TECHNICIAN: RD
PROJECT MANAGER: BR
JOB NUMBER: 791

SHEET NUMBER
SP6.0-1

PLOT DATE: 4/24/2025 3:26:20 PM

Copyright © **2025** RSM, Inc.-All Rights Reserved-This document was prepared for use only by the client, only for the purposes stated, and within a reasonable time from issuance. Non-commercial, educational, and scientific use of this document by regulatory agencies is regarded as a "fair use" and not a violation of copyright. Regulatory agencies may make additional copies of this document for internal use. Copies may also be made available to the public as required by law. The reprint must acknowledge the copyright and indicate that permission to reprint has been received.

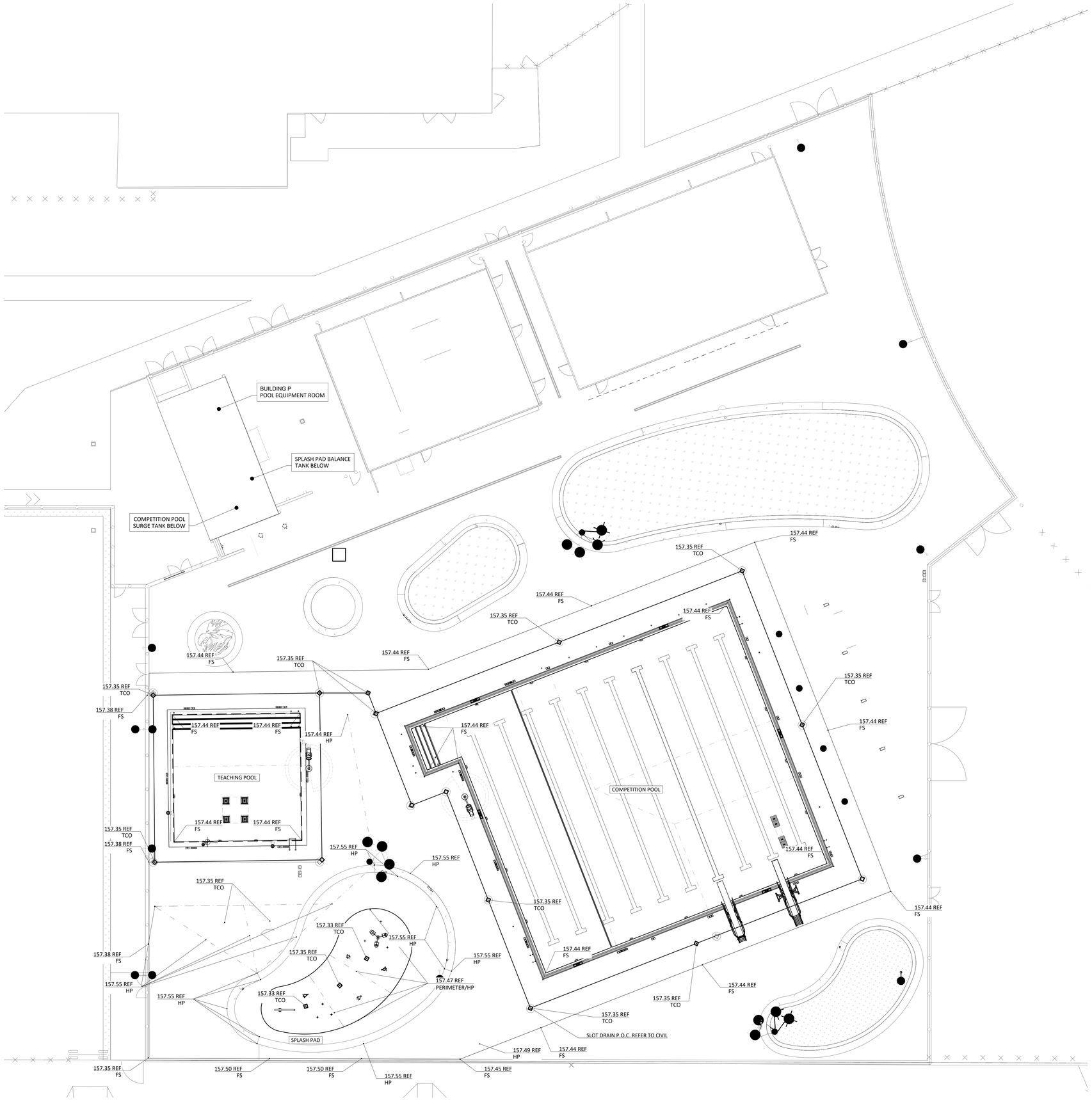

POOL DECK DIMENSIONAL CONTROL PLAN NOTES:

1. ALL DIMENSIONS SHALL BE VERIFIED PRIOR TO THE START OF THE WORK. ANY DISCREPANCIES SHALL BE REPORTED TO THE ENGINEER PRIOR TO CONSTRUCTION.
2. THE POOL DECK TO SLOPE NO GREATER THAN 2% AND NO LESS THAN 1% TO AREA DRAINS.

POOL DECK PLAN LEGEND

SYMBOL/LINE	DESCRIPTION
	SLOT DRAIN
	SLOPE CONTOUR
	SLOT DRAIN CATCH BASIN
	SLOPPED ARROW

COUNTY OF FRESNO ENVIRONMENTAL HEALTH DIVISION
1221 Fulton Street – 3rd Floor (559) 600-3357
APPROVED WITH NOTED CORRECTIONS AND SUBJECT TO FIELD INSPECTIONS
BY: DATE: 8/26/25
APPROVAL OF THIS PLAN DOES NOT CONSTITUTE PERMISSION TO VIOLATE ANY APPLICABLE CITY OR COUNTY ORDINANCE, OR STATE LAW, AND SHALL NOT PREVENT THIS DEPARTMENT FROM REQUIRING CORRECTION OF ERRORS OR OMISSIONS IN PLANS, SPECIFICATIONS OR CONSTRUCTION.

POOL DECK ELEVATION PLAN
3/32" = 1'-0"

1

AGD ARCHITECTURE | DESIGN

ANDREW GOODWIN DESIGNS
1238 MONTEREY STREET
SAN LUIS OBISPO, CA 93422
t: (805) 439-1611
www.andrewgoodwin.us

RSM Design | Engineering
ROGERS STRINGER MCCLELLAND
1981 N. BROADWAY, SUITE 202
WALNUT CREEK, CA 94596
PH. (925) 217-6619
www.rsm-de.com

These drawings are instruments of service and are the property of Andrew Goodwin Designs, Inc. The information represented on these drawings are exclusively for the project indicated and shall not be transferred or otherwise reproduced without express written permission of Andrew Goodwin. Copyright 2023

SEAL

REGISTERED PROFESSIONAL ENGINEER
MANTHA
STATE OF CALIFORNIA
NOT FOR CONSTRUCTION
04/24/25

PROJECT

TRANQUILLITY HIGH SCHOOL
AQUATIC CENTER MODERNIZATION
6052 Juanche Ave,
Tranquillity, CA 93668

CLIENT

GOLDEN PLAINS UNIFIED SCHOOL DISTRICT

SHEET TITLE

POOL DECK ELEVATION PLAN

PHASE DESCRIPTION
100% CD FCHD APPROVAL SWIMMING POOL

DATE: 8/26/2025
TECHNICIAN: DS
PROJECT MANAGER: BR
JOB NUMBER: 791

SHEET NUMBER
SP6.1-1

PLOT DATE: 4/24/2025 3:26:20 PM

Copyright © **2025** RSM, Inc.-All Rights Reserved-This document was prepared for use only by the client, only for the purposes stated, and within a reasonable time from issuance. Non-commercial, educational, and scientific use of this document by regulatory agencies is regarded as a "fair use" and not a violation of copyright. Regulatory agencies may make additional copies of this document for internal use. Copies may also be made available to the public as required by law. The reprint must acknowledge the copyright and indicate that permission to reprint has been received.

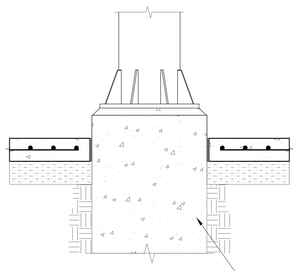

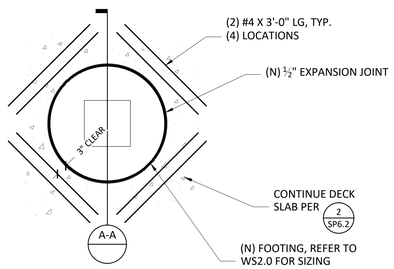

DECK AT WATERSLIDE SUPPORT 3/4" - 1'-0" (14)

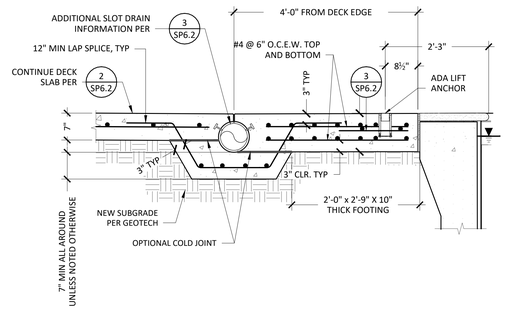

DECK SLOT DRAIN AT TEACHING POOL ACCESSIBLE LIFT FOUNDATION 3/4" = 1'-0" (11)

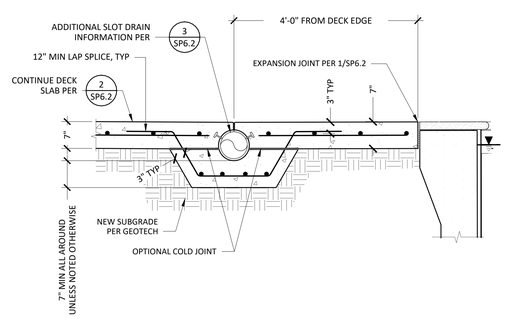

DECK SLOT DRAIN AT TEACHING POOL 3/4" = 1'-0" (10)

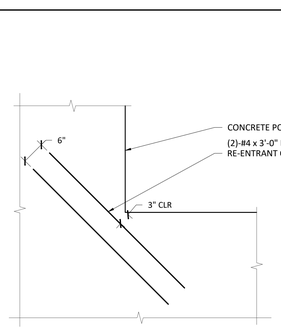

TYPICAL ADDITIONAL REINF. AT RE-ENTRANT CORNERS NOT TO SCALE (13)

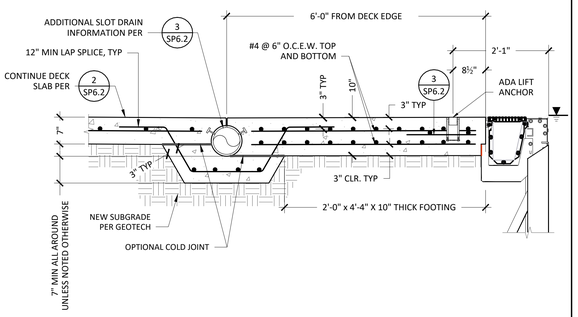

DECK SLOT DRAIN AT COMP. POOL ACCESSIBLE LIFT FOUNDATION 3/4" = 1'-0" (8)

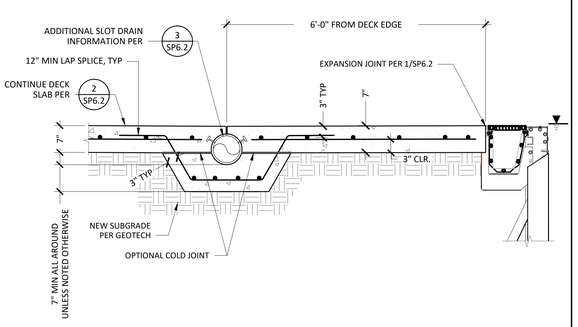

DECK SLOT DRAIN AT COMPETITION POOL 3/4" = 1'-0" (7)

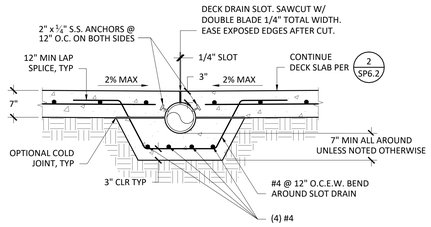

TYPICAL DECK SLOT DRAIN 3/4" = 1'-0" (4)

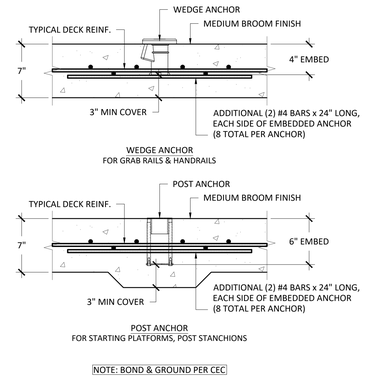

NOTE: BOND & GROUND PER CEC

TYPICAL DECK ANCHOR N.T.S. (3)

NOTES:
1. CONTRACTOR TO VERIFY ANCHOR SOCKET SET IS COMPATIBLE WITH STARTING PLATFORM AND MUST INSTALL PER MANUFACTURER'S REQUIREMENTS.
2. CONTRACTOR TO VERIFY ALL INSTALLATION DIMENSIONS, INCLUDING SETBACK DIMENSION.
3. CONTRACTOR TO VERIFY AND INSTALL STARTING PLATFORM ON SWIM RACING LANE CENTERLINE.
4. STARTING PLATFORM & ANCHOR SOCKETS SETS WITH AN INCORRECT INSTALLATION OR IMPROPER DIMENSIONAL TOLERANCE WILL BE REMOVED AND REINSTALLED BY THE CONTRACTOR AT NO EXPENSE TO THE OWNER.
5. LOCATE DECK PLATE ON STEP SIDE OF STARTING PLATFORM.

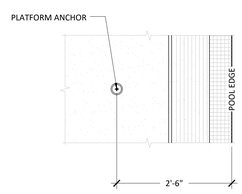

PLAN VIEW
N.T.S.

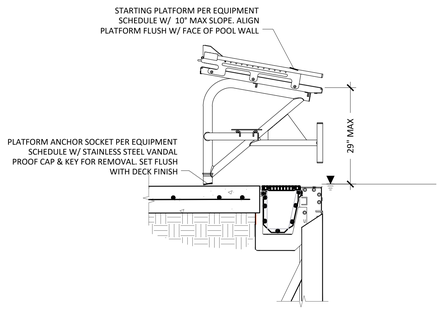

NOTE: BOND & GROUND PER CEC

STARTING PLATFORM AT ANCHOR 3/4" = 1'-0" (9)

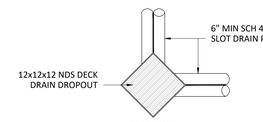

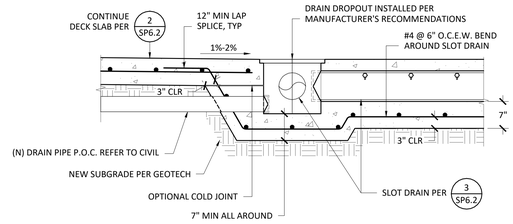

DECK SLOT DRAIN CORNER DROPOUT 3/4" = 1'-0" (6)

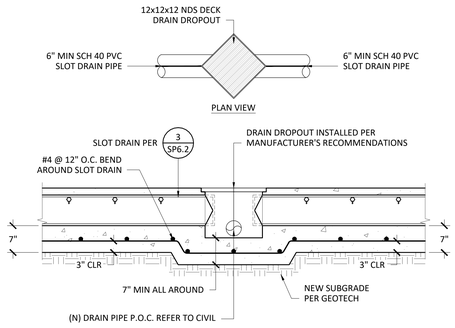

DECK SLOT DRAIN STRAIGHT DROPOUT 3/4" = 1'-0" (5)

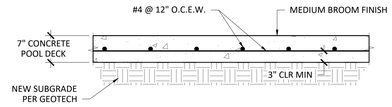

TYPICAL DECK SLAB 3/4" = 1'-0" (2)

JOINT NOTES:
1. CONSTRUCTION JOINTS & CONTROL JOINT SHALL HAVE LENGTH TO WIDTH RATIOS NOT EXCEEDING 1 ½" TO 1. REENTRANT CORNERS SHALL BE AVOIDED.
2. CONTRACTOR SHALL SUBMIT LAYOUT PLAN SHOWING PROPOSED CONTROL AND CONSTRUCTION JOINT LOCATIONS.
3. JOINT SPACING SHALL NOT EXCEED 20 FT. IN EITHER DIRECTION.
4. CONTROL JOINTS SHALL BE CUT AS SOON AS THE CONCRETE IN SUFFICIENTLY HARD TO RESIST TEARING, RAVELING, AND BEFORE RANDOM CRACKING OCCURS. APPROXIMATELY 1-4 HOURS AFTER FINISHING.

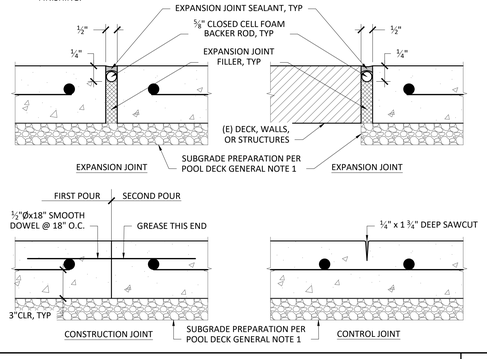

DECK SLAB JOINTS N.T.S. (1)

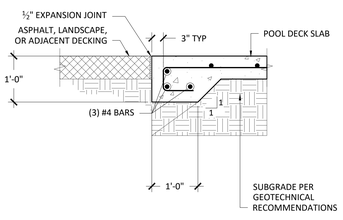

DECK EDGE 3/4" = 1'-0" (12)

AGD ARCHITECTURE | DESIGN

ANDREW GOODWIN DESIGNS
1238 MONTEREY STREET
SAN LUIS OBISPO, CA 93422
t: (805) 439-1611
www.andrewgoodwin.us

RSM Design | Engineering
ROGERS STRINGER MCCLELLAND
1981 N. BROADWAY, SUITE 202
WALNUT CREEK, CA 94596
PH. (925) 217-6619
www.rsm-de.com

These drawings are instruments of service and are the property of Andrew Goodwin Designs, Inc. The information represented on these drawings are exclusively for the project indicated and shall not be transferred or otherwise reproduced without express written permission of Andrew Goodwin.
Copyright 2023

SEAL

NOT FOR CONSTRUCTION

PROJECT

TRANQUILLITY HIGH SCHOOL
AQUATIC CENTER MODERNIZATION
6052 Juanche Ave,
Tranquillity, CA 93668

CLIENT

GOLDEN PLAINS UNIFIED SCHOOL DISTRICT

COUNTY OF FRESNO ENVIRONMENTAL HEALTH DIVISION
1221 Fulton Street - 3rd Floor (559) 600-3357
APPROVED WITH NOTED CORRECTIONS AND SUBJECT TO FIELD INSPECTIONS
DATE: 8/26/25
BY:
APPROVAL BY THIS DIVISION DOES NOT CONSTITUTE PERMISSION TO VIOLATE ANY APPLICABLE CITY OR COUNTY ORDINANCE, OR STATE LAW, AND SHALL NOT PREVENT THIS DEPARTMENT FROM REQUIRING CORRECTION OF ERRORS OR OMISSIONS IN PLANS, SPECIFICATIONS OR CONSTRUCTION.

SHEET TITLE

POOL DECK DETAILS

PHASE DESCRIPTION
100% CD FCHD APPROVAL
SWIMMING POOL

DATE: 8/26/2025
TECHNICIAN: RD
PROJECT MANAGER: BR
JOB NUMBER: 791

SHEET NUMBER
SP6.2-1

PLOT DATE: 4/24/2025 3:26:20 PM

Copyright © 2025 RSM, Inc.-All Rights Reserved-This document was prepared for use only by the client, only for the purposes stated, and within a reasonable time from issuance. Non-commercial, educational, and scientific use of this document by regulatory agencies is regarded as a "fair use" and not a violation of copyright. Regulatory agencies may make additional copies of this document for internal use. Copies may also be made available to the public as required by law. The reprint must acknowledge the copyright and indicate that permission to reprint has been received.

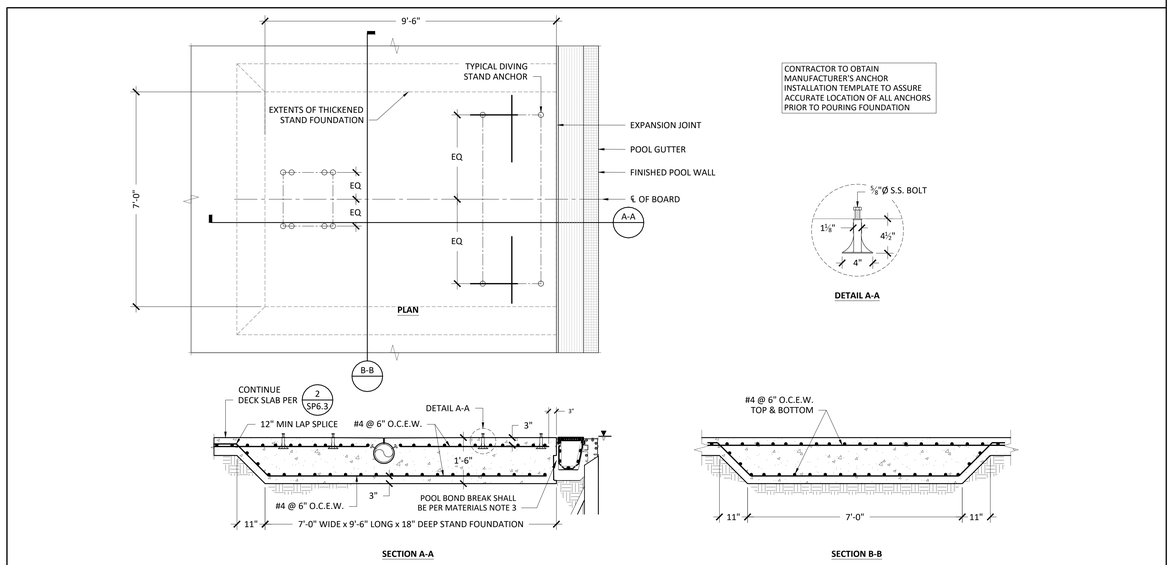

3M DIVE STAND FOUNDATION (2)
1/2" = 1'-0"

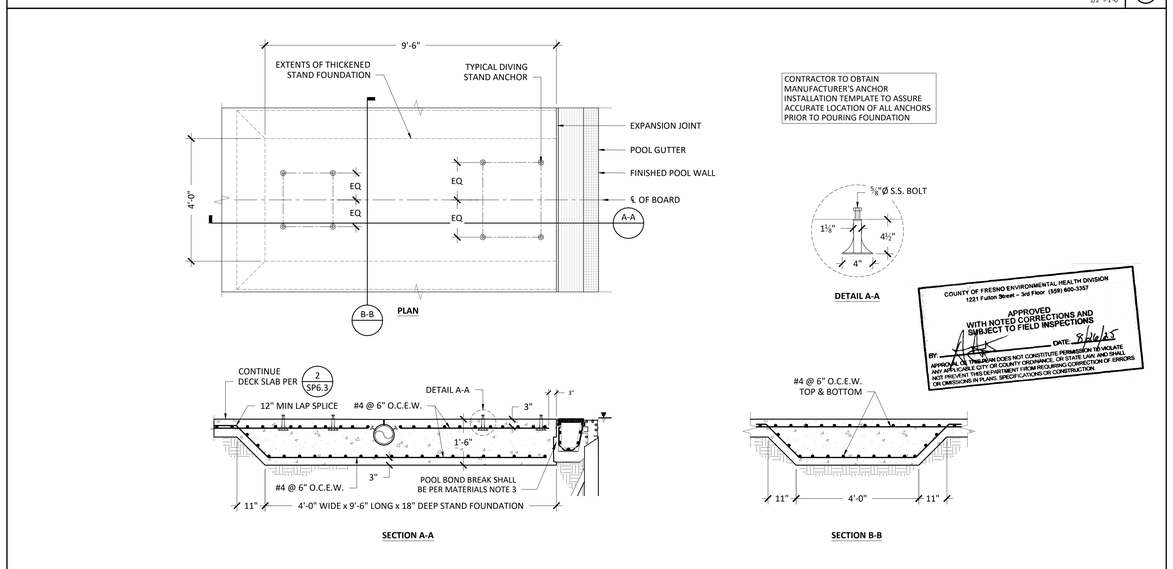

1M DIVE STAND FOUNDATION (1)
1/2" = 1'-0"

AGD
ARCHITECTURE | DESIGN

ANDREW GOODWIN DESIGNS
1238 MONTEREY STREET
SAN LUIS OBISPO, CA 93422
t: (805) 439-1611
www.andrewgoodwin.us

RSM
Design | Engineering
ROGERS STRINGER MCCLELLAND
1981 N. BROADWAY, SUITE 202
WALNUT CREEK, CA 94596
PH. (925) 217-6619
www.rsm-de.com

These drawings are instruments of service and are the property of Andrew Goodwin Designs, Inc. The information represented on these drawings are exclusively for the project indicated and shall not be transferred or otherwise reproduced without express written permission of Andrew Goodwin. Copyright 2023

SEAL

NOT FOR CONSTRUCTION

PROJECT

TRANQUILLITY HIGH SCHOOL
AQUATIC CENTER MODERNIZATION
6052 Juanche Ave,
Tranquillity, CA 93668

CLIENT

GOLDEN PLAINS UNIFIED SCHOOL DISTRICT

SHEET TITLE

POOL DECK DETAILS

PHASE DESCRIPTION
100% CD FCHD APPROVAL
SWIMMING POOL

DATE: 8/26/2025

TECHNICIAN: RD

PROJECT MANAGER: BR

JOB NUMBER: 791

SHEET NUMBER
SP6.3-1

PLOT DATE: 4/24/2025 3:26:20 PM

Copyright © **2025** RSM, Inc.-All Rights Reserved-This document was prepared for use only by the client, only for the purposes stated, and within a reasonable time from issuance. Non-commercial, educational, and scientific use of this document by regulatory agencies is regarded as a "fair use" and not a violation of copyright. Regulatory agencies may make additional copies of this document for internal use. Copies may also be made available to the public as required by law. The reprint must acknowledge the copyright and indicate that permission to reprint has been received.

GENERAL NOTES

DESIGN SPECIFICATIONS: ANSI/AISC 360-16 (15th ED); ACI 318-19; ASCE 7-16; ASTM F2376
GOVERNING BUILDING CODE: CALIFORNIA BUILDING CODE 2022 (IBC 2021)

GRAVITY LOADING:

WATER SLIDE:
DEAD LOAD
42" OPEN FLUME = 50 plf

WATER LOAD
42" OPEN FLUME =15 plf

RIDER (LIVE) LOAD
42" OPEN FLUME = 400 lbs

SNOW: GROUND SNOW LOAD = 5.0 psf
RISK CATEGORY = II
IMPORTANCE FACTOR = 1.0

STAIRS AND LANDINGS
DEAD LOAD = 15 psf
LIVE LOAD = 100 psf

WIND DESIGN
UNOCCUPIED ULTIMATE WIND VELOCITY (RISK CAT. I) = 88 MPH (3 SECOND GUST)
UNOCCUPIED ASD WIND VELOCITY (RISK CAT. I) = 69 MPH (3 SECOND GUST)
OCCUPIED ULTIMATE WIND VELOCITY (RISK CAT. II) = 94 MPH (3 SECOND GUST)
OCCUPIED ASD WIND VELOCITY (RISK CAT. II) = 73 MPH (3 SECOND GUST)
EXPOSURE CATEGORY = C

SEISMIC DESIGN FACTORS:
AS INDICATED IN GEOTECHNICAL REPORT
$S_s = 0.967g$ $S_{DS} = 0.891g$
$S_1 = 0.336g$ $S_{D1} = 0.672g$
SITE CLASS DEFINITION = D
SEISMIC DESIGN CATEGORY D
AMUSEMENT STRUCTURE NON BUILDING
R= 2.0
RISK CATEGORY = II

GENERAL CONSTRUCTION NOTES:

1. ALL WORK SHALL COMPLY WITH THE GOVERNING LOCAL BUILDING CODE.
2. REFERENCE STANDARD: UNLESS OTHERWISE NOTED (U.O.N.), ALL STANDARDS SHALL BE CURRENT EDITION, WITH LATEST ADDENDA, IF APPLICABLE.
3. THE CONTRACTOR SHALL VERIFY ALL CONTRACT DOCUMENTS, SITE ELEVATIONS, DIMENSIONS AND CONDITIONS PRIOR TO STARTING WORK AND SHALL NOTIFY THE ENGINEER OF ANY DISCREPANCIES OR INCONSISTENCIES.
4. GROUNDING OF SLIDE STRUCTURE AND SUPPORTS SHALL BE DONE IN ACCORDANCE WITH THE PROJECT SPECIFICATIONS AND THE LOCAL BUILDING CODE. GROUNDING NOT BY SPLASHTACULAR.

FOUNDATIONS:

1. FOUNDATIONS FOR THIS PROJECT HAVE BEEN DESIGNED IN ACCORDANCE WITH REQUIREMENTS SET FORTH IN THE REPORT BY TECHNICON ENGINEERING SERVICES, INC. (TES NO. 240282, DATED JUNE 12, 2024). INDIVIDUAL SPREAD FOOTINGS HAVE BEEN DESIGNED TO BEAR ON TESTED AND APPROVED NATIVE SOIL OR ENGINEER FILL WITH A NET ALLOWABLE BEARING PRESSURE OF 3,000 PSF. REFER TO THE SOILS REPORT FOR ADDITIONAL INFORMATION AND REQUIREMENTS. CONTRACTOR SHALL VERIFY THE SOIL BEARING PRESSURE PRIOR TO FOOTING CONSTRUCTION. THE CONTRACTOR SHALL REFER TO THE GEOTECHNICAL REPORT FOR ALL REQUIREMENTS AND RECOMMENDATIONS PERTINENT TO THIS PROJECT.
2. ANCHOR BOLTS SHALL BE LOCATED BY MEANS OF A TEMPLATE. PROVIDE A NUT ABOVE AND BELOW TEMPLATE TO ASSURE PROPER VERTICAL ALIGNMENT. TEMPLATE PATTERN PROVIDED BY SPLASHTACULAR.
3. ALL FOUNDATIONS SHALL BE SQUARE AND LEVEL.
4. GROUT BELOW COLUMN BASES PLATES. GROUT SHALL BE DRY AND STIFF TO PREVENT SHRINKAGE, WITH A MINIMUM COMPRESSIVE STRENGTH OF 4000 PSI. THOROUGHLY COMPACT GROUT BENEATH BASE PLATE. CONTRACTOR TO PROVIDE (2) $\frac{3}{4}$" Ø WEEP HOLES BETWEEN COLUMN BASE PLATE AND CONCRETE PEDESTAL TO ALLOW FOR DRAINAGE OF COLUMN. (NOT BY SPLASHTACULAR CREWS)

EXCAVATION AND BACKFILL NOTES:

1. EXCAVATION AND BACKFILL SHALL BE EXECUTED IN ACCORDANCE WITH THE PROJECT SPECIFICATIONS.
2. BACKFILL AND COMPACTION SHALL BE INSPECTED AND CERTIFIED BY A LICENSED GEOTECHNICAL ENGINEER.
3. FOOTING EXCAVATIONS SHALL BE EXCAVATED TO PROPER LINE AND LEVEL TO ENSURE MINIMUM CONCRETE OVER A FOOTING REINFORCEMENT FOR FOOTING DEPTH.

CONCRETE AND REINFORCING STEEL:

1. CONCRETE CONSTRUCTION SHALL CONFORM TO AMERICAN CONCRETE INSTITUTE (ACI) CODES AND SPECIFICATIONS, LATEST EDITION.

   ACI 301 "SPECIFICATIONS FOR STRUCTURAL CONCRETE"
   ACI 315 "DETAILS AND DETAILING OF CONCRETE REINFORCEMENT"
   ACI 318 "BUILDING CODE REQUIREMENTS FOR REINFORCED CONCRETE"

2. ALL CONCRETE FOR FOUNDATIONS SHALL BE NORMAL WEIGHT (150 PCF), 4000 PSI, 28 DAY COMPRESSIVE STRENGTH WITH 5% TO 7% AIR ENTRAINMENT.
3. ALL CAST-IN-PLACE CONCRETE SHALL BE TESTED BY AN INDEPENDENT TESTING LABORATORY. SEE PROJECT SPECIFICATIONS FOR REQUIREMENTS. CONTRACTOR SHALL RETAIN TEST RESULTS FOR DURATION OF CONSTRUCTION.
4. ALL CAST-IN-PLACE CONCRETE SHALL HAVE REACHED ITS DESIGN COMPRESSIVE STRENGTH PRIOR TO SLIDE STRUCTURE INSTALLATION . CONTRACTOR TO PROVIDE TESTING RESULTS IF REQUESTED BY SPLASHTACULAR.
5. ALL REINFORCING STEEL SHALL BE GRADE 60 DEFORMED, BILLET-STEEL ASTM A615. U.O.N. .
6. CLEAR CONCRETE COVERAGE FOR ALL REINFORCING STEEL SHALL BE AS FOLLOWS, UNLESS OTHERWISE NOTED ON THE DRAWING:

CONCRETE CAST ON SOIL	3"
FORMED CONCRETE EXPOSED TO EARTH OR WEATHER	2"

7. BARS MARKED CONTINUOUS AND ALL VERTICAL STEEL SHALL BE LAPPED OR EMBEDDED TO DEVELOP THE FULL TENSILE CAPACITY OF THE BAR. LAPS SHALL BE AS SPECIFIED BELOW OR AS NOTED ON THE DESIGN DRAWINGS.

#4	25" LAP	8" HOOK
#5	25" LAP	10" HOOK
#6	37" LAP	12" HOOK
#7	54" LAP	14" HOOK

8. ALL BARS ARE TO BE SUPPORTED IN FORMS AND SPACED WITH WIRE BAR SUPPORTS PER ACI "MANUAL OF STANDARD PRACTICE FOR DETAILING CONCRETE STRUCTURES" (LATEST EDITION). BARS SHALL BE SECURELY WIRED PER LATEST EDITION OF CRSI RECOMMENDED PRACTICE FOR PLACING REINFORCING BARS. ACCESSORIES FOR EXPOSED CONCRETE SHALL BE PLASTIC OR SHALL HAVE PLASTIC TIPPED FEET.
9. CONCRETE PLACE DURING COLD WEATHER SHALL CONFORM TO THE REQUIREMENTS OF ACI 306. COLD WEATHER IS DEFINED AS A PERIOD WHEN, FOR MORE THAN 3 SUCCESSIVE DAYS THE MEAN DAILY TEMPERATURE DROPS BELOW 40 DEGREES FAHRENHEIT.
10. CONCRETE PLACED DURING HOT WEATHER SHALL CONFORM TO THE REQUIREMENTS OF ACI 305.
11. ALL EDGES OF FORMED CONCRETE SHALL HAVE A $\frac{3}{4}$" CHAMFER U.N.O.

STRUCTURAL STEEL:

1. ALL STRUCTURAL STEEL SHALL CONFORM TO THE FOLLOWING:

W SHAPE STEEL	ASTM A992 GRADE 50
CHANNELS, ANGLES, PLATE, & MISC STEEL	ASTM A36
STRUCTURAL TUBING RECTANGULAR SECTIONS	ASTM A500, GRADE C (FY = 50 KSI)
STRUCTURAL TUBING HSS16.00 CIRCULAR	ASTM A500, GRADE C (FY = 46 KSI)
STEEL PIPE AND 24" DIA x 0.25	ASTM A53, GRADE B (FY = 35 KSI)
BOLTS, STEEL TO STEEL	A325N (SNUG TIGHT), A307N (SNUG TIGHT)
BOLTS, STEEL TO STEEL	A325SC (FULLY PRETENSIONED), WHERE NOTED
ANCHOR BOLTS	ASTM F1554 (FY = 36 KSI)

2. BOLT HOLES SHALL BE $\frac{1}{16}$" GREATER THAN BOLT SIZE (STANDARD HOLES), UNLESS NOTED OTHERWISE (U.N.O.). ALL BOLT HOLES LARGER THAN THE STANDARD HOLE SHALL BE CONSIDERED OVERSIZED OR SLOTTED AND REQUIRE THE INSTALLATION OF A WASHER. ALL BOLTS, NUTS, WASHERS AND STRUCTURAL STEEL SHALL BE HOT-DIP GALVANISED.
3. HARDENED WASHERS SHALL BE INSTALLED OVER ALL OVERSIZED OR SLOTTED HOLES.
4. WELDING SHALL CONFORM TO THE LATEST PUBLICATION OF APPLICABLE CODES SET FORTH BY THE AMERICAN WELDING SOCIETY. WELDING ELECTRODES SHALL BE ER70S-6.
5. EXPANSION ANCHORS: SHALL BE HILTI "KWIK BOLT TZ" OR APPROVED EQUAL. INSTALL ANCHORS IN CONFORMANCE WITH THE MANUFACTURER'S RECOMMENDATIONS.
6. ADHESIVE ANCHORS SHALL BE HILTI "RE 500 V3" OR APPROVED EQUAL. INSTALL ANCHORS IN CONFORMANCE WITH THE MANUFACTURER'S RECOMMENDATIONS.
7. ERECTOR AND FABRICATOR SHALL FOLLOW ALL AISC STANDARDS AND PRACTICES WHICH PERTAIN TO THE WORK HEREIN.

TREADS, LANDINGS, AND PLATFORM DECKING:

1. GRATING/DECKING FOR TREADS, LANDINGS AND PLATFORMS SHALL BE 1$\frac{3}{8}$" THICK WITH A NON SLIP WALKING SURFACE. SEE SEPARATE SUBMITTAL FOR ADDITIONAL DETAILS.

PLATFORM COVER/CANOPY: (SEE CONTRACT FOR INCLUSION OR EXCLUSION OF THE SLIDE CANOPY)

1. CANOPY SHALL BE PROVIDED OVER SLIDE ENTRY PLATFORMS. COVER SHALL BE A PIPE FRAME WITH ACRYLIC FABRIC OR WOVEN VINYL IMPREGNATED POLYESTER YARN. FABRIC SHALL BE ATTACHED TO PIPE FRAME USING WHITE STRAPS AND SPRING CLIPS.
2. BOTTOM OF SHADE SHALL BE 7'6" ABOVE THE ENTRY TUB.
3. CANOPY LEGS SHALL FIT INTO SLEEVES AT CORNERS OF THE DECK.
4. CANOPY DESIGN TO BE IN CONFORMANCE WITH IBC SECTION 3105.
5. FABRIC CANOPIES SHALL BE REMOVED DURING WINTER MONTHS. CANOPIES ARE NOT DESIGNED FOR SNOW LOADING.

STRUCTUAL STEEL COATING:

1. ALL STRUCTURAL STEEL SHALL BE HOT DIPPED GALVANIZED.
2. ON ALL PAINTED PROJECTS, THE STRUCTURAL STEEL WILL HAVE A POWDER COATED FINISH.

SPECIAL INSPECTIONS:

1. THE OWNER, ARCHITECT OR THE ENGINEER OF RECORD ACTING AS THE OWNERS AGENT SHALL EMPLOY ONE OR MORE SPECIAL INSPECTORS TO PROVIDE INSPECTIONS FOR:
   1.1. CONCRETE
      1.1.1. CONTINUOUS: ANCHOR BOLT, TEST SAMPLE, SLUMP, TEMPERATURE
      1.1.2. PERIODIC: REINFORCING STEEL, PLACEMENT, DESIGN MIX, CURING, FORM WORK
   1.2. STEEL (AS REQUIRED TO MEET STATE/CITY BUILDING CODE AND QUALITY REQUIREMENTS)
      1.2.1. CONTINUOUS: SLIP CRITICAL CONNECTION, FULL PENETRATION WELD
      1.2.2. PERIODIC: IDENTIFICATION MARK, MANUFACTURER'S CERTIFICATION, BEARING TYPE CONNECTION, FILLET WELDS
   1.3. SOIL
      1.3.1. CONTINUOUS: BEARING CAPACITY
      1.3.2. PERIODIC: FOUNDATION DEPTH
2. THE SPECIAL INSPECTOR SHALL BE A QUALIFIED PERSON WHO SHALL DEMONSTRATE COMPETENCE TO THE SATISFACTION OF THE BUILDING OFFICIAL FOR INSPECTION OF THE ITEMS LISTED ABOVE.
3. THE SPECIAL INSPECTOR SHALL FURNISH AND SUBMIT A FINAL INSPECTION REPORT TO THE BUILDING OFFICIAL, THE ENGINEER OR ARCHITECT OF RECORD.
4. ANY COST ASSOCIATED WITH PROVIDING THE ABOVE INSPECTIONS INCLUDING SHOP INSPECTIONS AND MATERIAL TESTING SHALL BE BY THE OWNER, ARCHITECT OR ENGINEER ACTING AS THE OWNER'S AGENT. NOT BY SPLASHTACULAR.

FIBERGLASS FASTENER SPECIFICATIONS:

2. 3/8" x 1 1/2" S.S. FASTENERS AT ALL FLUME SECTION JOINTS
3. 1/2" x 3" GALVANIZED FASTENERS AT FLUME ARM MOUNTING PLATES

FIBERGLASS FLUME SPECIFICATIONS:

1. 20 MILS MIN OF SPRAY LAY-UP ISOPHTHALIC NEOPENTYL GLYCOL (ISO-NPG) GEL COAT W/ UV INHIBITORS, INTERIOR & EXTERIOR
2. LAMINATE THICKNESS OF 1/4" NOMINAL SPRAY/CHOP LAY-UP THROUGHOUT ENTIRE BODY
3. GLASS-TO-RESIN RATIO OF APPROXIMATELY 35 TO 65
4. FLANGE THICKNESS OF 1/4" NOMINAL
5. ONE (1) LAYER OF 18 OZ. WOVEN ROVING THROUGHOUT THE BODY OF FLUME AND BETWEEN LAYERS OF CHOP
6. REVERSE SIDES SANDED TO BE FREE OF BURRS AND SPRAYED TO A NON-POROUS FINISH WITH AN ISO-NPG GEL COAT CONTAINING A HI-GLOSS GEL COAT ADDITIVE (DURATEC)
7. ALL EDGES WET-TRIMMED AND HAND-SANDED TO DULL, ROUNDED EDGE AND FINISH WITH AN ISO-NPG GEL COAT CONTAINING DURATEC

FIBERGLASS STARTER TUB SPECIFICATIONS:

1. ALL OF THE ABOVE FLUME SPECIFICATIONS APPLY, EXCEPT AS NOTED
2. STARTER TUB LAMINATE THICKNESS IS 1/4" TO 5/16" OF SPRAY/CHOP LAY-UP THROUGHOUT THE ENTIRE BODY
3. FLOOR AND RIDING SURFACE ONLY IS REINFORCED WITH A NON-COMPRESSING CORE MATERIAL, OF NOT LESS THAN 3/8" THICK TO WITHIN 4" OF THE ATTACHMENT FLANGE, AND COVERED WITH NOT LESS THAN 1/8" SPRAY/CHOP LAMINATE.

© 2025 - Splashtacular, LLC - All Rights Reserved.

This document is the intellectual property of Splashtacular, LLC, which has exclusive rights to proprietary trade secrets and confidential information contained herein. Receipt of permission to use this document does not convey any rights to use the information contained herein without prior written consent of Splashtacular, LLC.

REVISION HISTORY

MARK	DATE		APPROVED
△	mm/dd/yyyy	ISSUED FOR APPROVAL	
△			
△			
△			
△			

The Structural Support System, foundations, decking/treads, fiberglass components including a finite analysis of the ride path depicted on these drawings were designed under the direction of the Professional Engineer who's seal and signature are affixed to this drawing. Any structural design connections of the slide components that are connected to a building are not by Splashtacular.

SPLASHTACULAR®
Waterslides and Waterpark Attractions
401 N.East Street • Paola, Kansas 66071
P 800.844.5334 • F 913.294.2496

TITLE: GENERAL NOTES		
PROJECT: TRANQUILITY HS		
DATE: 03/26/2025	PROJECT NUMBER: 12125	COUNTRY: USA
SCALE: NTS	DESIGNER: DAR	STATE: CALIFORNIA
CHECKED: RRR	APPROVED: RRR	CITY: TRANQUILITY

S1.0

COUNTY OF FRESNO ENVIRONMENTAL HEALTH DIVISION
1221 Fulton Street – 3rd Floor (559) 600-3357
APPROVED
WITH NOTED CORRECTIONS AND
SUBJECT TO FIELD INSPECTIONS
BY: DATE: 8/26/25
APPROVAL OF THIS PLAN DOES NOT CONSTITUTE PERMISSION TO VIOLATE ANY APPLICABLE CITY OR COUNTY ORDINANCE, OR STATE LAW, AND SHALL NOT PREVENT THIS DEPARTMENT FROM REQUIRING CORRECTION OF ERRORS OR OMISSIONS IN PLANS, SPECIFICATIONS OR CONSTRUCTION.

AGD
ARCHITECTURE | DESIGN
ANDREW GOODWIN DESIGNS
1238 MONTEREY STREET
SAN LUIS OBISPO, CA 93422
t: (805) 439-1611
www.andrewgoodwin.us

RSM
Design | Engineering
ROGERS STRINGER MCCLELLAND
1981 N. BROADWAY, SUITE 202
WALNUT CREEK, CA 94596
PH. (925) 217-6619
www.rsm-de.com

These drawings are instruments of service and are the property of Andrew Goodwin Designs, Inc. The information represented on these drawings are exclusively for the project indicated and shall not be transferred or otherwise reproduced without express written permission of Andrew Goodwin.
Copyright 2023

SEAL
NOT FOR CONSTRUCTION

PROJECT
TRANQUILLITY HIGH SCHOOL
AQUATIC CENTER MODERNIZATION
6052 Juanche Ave,
Tranquillity, CA 93668

CLIENT
GOLDEN PLAINS UNIFIED SCHOOL DISTRICT

SHEET TITLE
GENERAL NOTES

PHASE DESCRIPTION
100% CD FCHD APPROVAL
SWIMMING POOL

DATE: 8/26/2025
TECHNICIAN:
PROJECT MANAGER:
JOB NUMBER: 791

SHEET NUMBER
WS1.0-1

PLOT DATE: 4/24/2025 3:26:20 PM

Copyright © 2025 RSM, Inc.-All Rights Reserved-This document was prepared for use only by the client, only for the purposes stated, and within a reasonable time from issuance. Non-commercial, educational, and scientific use of this document by regulatory agencies is regarded as a "fair use" and not a violation of copyright. Regulatory agencies may make additional copies of this document for internal use. Copies may also be made available to the public as required by law. The reprint must acknowledge the copyright and indicate that permission to reprint has been received.

NOTES:
1. 1, 2, ETC. ARE FOR FIBERGLASS PARTS LABELS.
2. SEE SHEETS S3 FOR COLUMN SUPPORT DETAILS.
3. SEE SHEETS S4 FOR COLUMN SCHEDULE AND COLUMN ELEVATIONS.
4. SEE SHEETS S5 FOR ARM DETAILS.
5. SEE SHEETS S6 FOR STAIR PLAN AND DETAILS.
6. SEE DETAIL 03S9.0 FOR MECHANICAL SCHEMATIC DETAIL.
7. SEE SHEET S9.0 FOR FIBERGLASS DETAILS AND NOTES.
8. "EDGE OF POOL WALL" IS THE POOL SIDE FACE OF WALL AT WATER SURFACE ELEVATION.
9. COLUMN WELDMENTS, BASE AND CAP PLATE ORIENTATIONS, AND BOLT PATTERNS SHALL BE ALIGNED USING THE REFERENCE DIRECTION AS A GUIDE.
10. SPLASHTACULAR DECK EL. 100.000' = CLIENT PROVIDED DECK EL. 157.44'

Slide-A Length & Quantity		
Slide Type:	42" Open Body Slide	
Open:	147.65 ft	34 parts
Enclosed:	-	-
Runout:	-	-
Splashout:	-	-
Total:	147.65 ft	34 parts

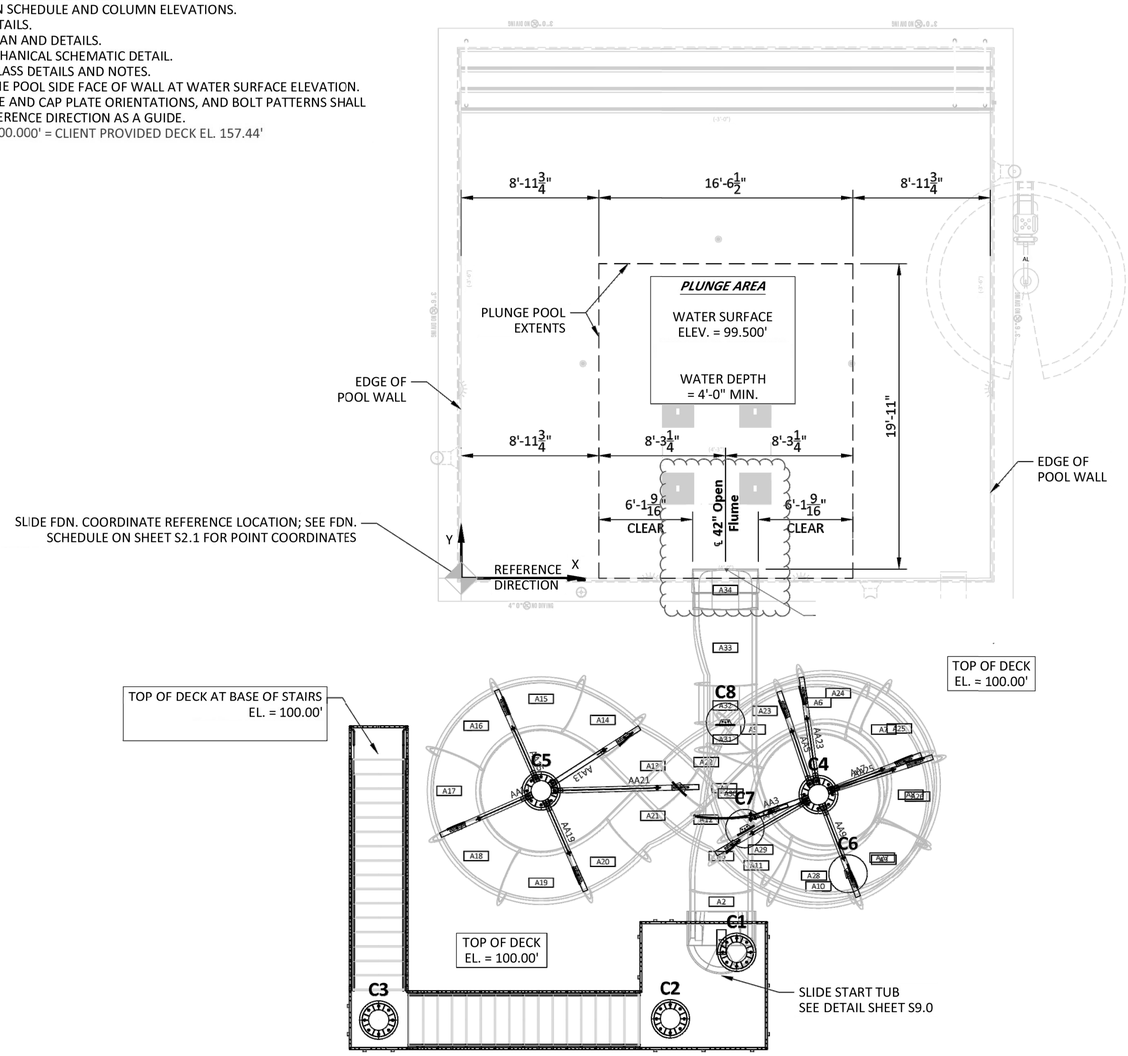

1 / S1.1 SLIDE LAYOUT PLAN
SCALE: 1/4" = 1'-0"

© 2025 - Splashtacular, LLC - All Rights Reserved.

This document is the intellectual property of Splashtacular, LLC, which has exclusive rights to proprietary trade secrets and confidential information contained herein. Receipt of permission to use this document does not convey any rights to use the information contained herein without prior written consent of Splashtacular, LLC.

REVISION HISTORY

MARK	DATE		APPROVED
△	mm/dd/yyyy	ISSUED FOR APPROVAL	
△			
△			
△			
△			

The Structural Support System, foundations, decking/treads, fiberglass components including a finite analysis of the ride path depicted on these drawings were designed under the direction of the Professional Engineer who's seal and signature are affixed to this drawing. Any structural design connections of the slide components that are connected to a building are not by Splashtacular.

SPLASHTACULAR®
Waterslides and Waterpark Attractions
401 N.East Street • Paola, Kansas 66071
P 800.844.5334 • F 913.294.2496

TITLE: SITE LAYOUT PLAN		
PROJECT: TRANQUILITY HS		
DATE: 03/26/2025	PROJECT NUMBER: 12125	COUNTRY: USA
SCALE: AS NOTED	DESIGNER: DAR	STATE: CALIFORNIA
CHECKED: RRR	APPROVED: RRR	CITY: TRANQULITY

S1.1

COUNTY OF FRESNO ENVIRONMENTAL HEALTH DIVISION
1221 Fulton Street – 3rd Floor (559) 600-3357
APPROVED WITH NOTED CORRECTIONS AND SUBJECT TO FIELD INSPECTIONS
BY: DATE: 8/26/25
APPROVAL OF THIS DRAWING DOES NOT CONSTITUTE PERMISSION TO VIOLATE ANY APPLICABLE CITY OR COUNTY ORDINANCE OR STATE LAW, AND SHALL NOT PREVENT THIS DEPARTMENT FROM REQUIRING CORRECTION OF ERRORS OR OMISSIONS IN PLANS, SPECIFICATIONS OR CONSTRUCTION.

AGD ARCHITECTURE | DESIGN
ANDREW GOODWIN DESIGNS
1238 MONTEREY STREET
SAN LUIS OBISPO, CA 93422
t: (805) 439-1611
www.andrewgoodwin.us

RSM Design | Engineering
ROGERS STRINGER MCCLELLAND
1981 N. BROADWAY, SUITE 202
WALNUT CREEK, CA 94596
PH. (925) 217-6619
www.rsm-de.com

These drawings are instruments of service and are the property of Andrew Goodwin Designs, Inc. The information represented on these drawings are exclusively for the project indicated and shall not be transferred or otherwise reproduced without express written permission of Andrew Goodwin.
Copyright 2023

SEAL
NOT FOR CONSTRUCTION
8/26/25

PROJECT
TRANQUILLITY HIGH SCHOOL
AQUATIC CENTER MODERNIZATION
6052 Juanche Ave,
Tranquillity, CA 93668

CLIENT
GOLDEN PLAINS UNIFIED SCHOOL DISTRICT

SHEET TITLE
SITE LAYOUT PLAN

PHASE DESCRIPTION
100% CD FCHD APPROVAL SWIMMING POOL

DATE: 8/26/2025
TECHNICIAN:
PROJECT MANAGER:
JOB NUMBER: 791
SHEET NUMBER
WS1.1-1

PLOT DATE: 4/24/2025 3:26:20 PM

Copyright © 2025 RSM, Inc.-All Rights Reserved-This document was prepared for use only by the client, only for the purposes stated, and within a reasonable time from issuance. Non-commercial, educational, and scientific use of this document by regulatory agencies is regarded as a "fair use" and not a violation of copyright. Regulatory agencies may make additional copies of this document for internal use. Copies may also be made available to the public as required by law. The reprint must acknowledge the copyright and indicate that permission to reprint has been received.

SLIDE COMPONENT SCHEDULE (HELICAL) FOR SLIDE-A

Part No.	Part ID	Part Description	Length	Slope (%)	Slope (deg)	X Coord	Y Coord	Z Coord	Support	Bracket Height	Bracket Angle	Detail	Part Note
1	4204EN	Entry Tub	4.000'	0.00 %	0.00°	16.986'	-21.740'	119.933'				01S9.0	-
2	**4208CX-S**	**8' Radius, Lo, Convex, 8.32 deg**	**1.162'**	**14.63 %**	**8.32°**	**16.986'**	**-20.582'**	**119.848'**				-	-
3	4205TL	Hi-wall Transition, Left, 5.000'	5.000'	14.63 %	8.32°	16.986'	-15.634'	119.125'	AA3 / C4	-	98.32°	-	-
4	**4210CR-S**	**10' Radius, Curve Right, 22.50 deg**	**3.957'**	**14.63 %**	**8.32°**	**17.747'**	**-11.808'**	**118.550'**				-	-
5	4206CR	6' Radius, Curve Right, 45.00 deg	4.748'	14.63 %	8.32°	20.994'	-8.560'	117.860'	AA5 / C4	6.63"	98.32°	-	-
6	4206CR	6' Radius, Curve Right, 45.00 deg	4.748'	14.63 %	8.32°	25.587'	-8.560'	117.171'				-	-
7	4206CR	6' Radius, Curve Right, 45.00 deg	4.748'	14.63 %	8.32°	28.834'	-11.808'	116.481'	AA7 / C4	6.63"	98.32°	-	-
8	4206CR	6' Radius, Curve Right, 45.00 deg	4.748'	14.63 %	8.32°	28.834'	-16.400'	115.792'				-	-
9	4206CR	6' Radius, Curve Right, 45.00 deg	4.748'	14.63 %	8.32°	25.587'	-19.647'	115.102'	AA9 / C4	6.63"	98.32°	-	-
10	4206CR	6' Radius, Curve Right, 45.00 deg	4.748'	14.63 %	8.32°	20.994'	-19.647'	114.413'				-	-
11	**4210CR-S**	**10' Radius, Curve Right, 22.50 deg**	**3.957'**	**14.63 %**	**8.32°**	**17.750'**	**-17.479'**	**113.838'**	**AA11 / C4**	**6.63"**	**98.32°**	-	-
12	4205TR	Hi-wall Transition, Right, 5.000'	5.000'	14.63 %	8.32°	14.252'	-13.981'	113.115'				-	-
13	4205TR	Hi-wall Transition, Right, 5.000'	5.000'	14.63 %	8.32°	10.754'	-10.483'	112.391'	AA13 / C5	6.63"	98.32°	-	-
14	**4210CL-S**	**10' Radius, Curve Left, 22.50 deg**	**3.957'**	**14.63 %**	**8.32°**	**7.509'**	**-8.315'**	**111.816'**				-	-
15	4206CL	6' Radius, Curve Left, 45.00 deg	4.748'	14.63 %	8.32°	2.917'	-8.315'	111.127'	AA15 / C5	6.63"	98.32°	-	-
16	4206CL	6' Radius, Curve Left, 45.00 deg	4.748'	14.63 %	8.32°	-0.330'	-11.562'	110.437'				-	-
17	4206CL	6' Radius, Curve Left, 45.00 deg	4.748'	14.63 %	8.32°	-0.330'	-16.154'	109.748'	AA17 / C5	6.63"	98.32°	-	-
18	4206CL	6' Radius, Curve Left, 45.00 deg	4.748'	14.63 %	8.32°	2.917'	-19.401'	109.058'				-	-
19	4206CL	6' Radius, Curve Left, 45.00 deg	4.748'	14.63 %	8.32°	7.509'	-19.401'	108.369'	AA19 / C5	6.63"	98.32°	-	-
20	**4210CL-S**	**10' Radius, Curve Left, 22.50 deg**	**3.957'**	**14.63 %**	**8.32°**	**10.754'**	**-17.234'**	**107.794'**				-	-
21	4205TL	Hi-wall Transition, Left, 5.000'	5.000'	14.63 %	8.32°	14.252'	-13.735'	107.070'	AA21 / C5	6.63"	98.32°	-	-
22	4205TL	Hi-wall Transition, Left, 5.000'	5.000'	14.63 %	8.32°	17.750'	-10.237'	106.346'				-	-
23	4210CR	10' Radius, Curve Right, 30.00 deg	5.275'	14.63 %	8.32°	22.233'	-7.649'	105.580'	AA23 / C4	6.63"	98.32°	-	-
24	4206CR	6' Radius, Curve Right, 45.00 deg	4.748'	14.63 %	8.32°	26.786'	-8.248'	104.891'				-	-
25	4206CR	6' Radius, Curve Right, 45.00 deg	4.748'	14.63 %	8.32°	29.582'	-11.892'	104.201'	AA25 / C4	6.63"	98.32°	-	-
26	4206CR	6' Radius, Curve Right, 45.00 deg	4.748'	14.63 %	8.32°	28.982'	-16.445'	103.512'				-	-
27	4206CR	6' Radius, Curve Right, 45.00 deg	4.748'	14.63 %	8.32°	25.339'	-19.240'	102.822'	C6	6.63"	98.32°	-	-
28	4206CR	6' Radius, Curve Right, 45.00 deg	4.748'	14.63 %	8.32°	20.786'	-18.641'	102.133'				-	-
29	**4206CR-S**	**6' Radius, Curve Right, 30.00 deg**	**3.165'**	**14.63 %**	**8.32°**	**18.590'**	**-16.445'**	**101.673'**	**C7**	**6.63"**	**98.32°**	-	-
30	4210CR	10' Radius, Curve Right, 30.00 deg	5.275'	14.63 %	8.32°	17.250'	-11.445'	100.907'				-	-
31	**4225CV-S**	**25' Radius, Hi, Concave, 4.32 deg**	**1.887'**	**6.99 %**	**4.00°**	**17.250'**	**-9.569'**	**100.704'**	**C8**	**6.63"**	**94.00°**	-	-
32	**4203HS-S**	**Hi-wall Straight, 2.552'**	**2.552'**	**6.99 %**	**4.00°**	**17.250'**	**-7.023'**	**100.526'**				-	-
33	4205TR	Hi-wall Transition, Right, 5.000'	5.000'	6.99 %	4.00°	17.250'	-2.035'	100.177'				-	-
34	4203EC	Pool End Cap	2.542'	6.99 %	4.00°	17.250'	0.500'	100.000'				02S9.0	-

© 2025 - Splashtacular, LLC - All Rights Reserved.

This document is the intellectual property of Splashtacular, LLC, which has exclusive rights to proprietary trade secrets and confidential information contained herein. Receipt of permission to use this document does not convey any rights to use the information contained herein without prior written consent of Splashtacular, LLC.

REVISION HISTORY

MARK	DATE		APPROVED
△	mm/dd/yyyy	ISSUED FOR APPROVAL	
△			
△			
△			
△			

The Structural Support System, foundations, decking/treads, fiberglass components including a finite analysis of the ride path depicted on these drawings were designed under the direction of the Professional Engineer who's seal and signature are affixed to this drawing. Any structural design connections of the slide components that are connected to a building are not by Splashtacular.

SPLASHTACULAR®
Waterslides and Waterpark Attractions
401 N.East Street • Paola, Kansas 66071
P 800.844.5334 • F 913.294.2496

TITLE: SLIDE A SCHEDULE		
PROJECT: TRANQUILITY HS		
DATE: 03/26/2025	PROJECT NUMBER: 12125	COUNTRY: USA
SCALE: NTS	DESIGNER: DAR	STATE: CALIFORNIA
CHECKED: RRR	APPROVED: RRR	CITY: TRANQUILITY

S1.2

COUNTY OF FRESNO ENVIRONMENTAL HEALTH DIVISION
1221 Fulton Street - 3rd Floor (559) 600-3357
APPROVED
WITH NOTED CORRECTIONS AND
SUBJECT TO FIELD INSPECTIONS
BY: DATE: 8/26/25
APPROVAL OF THIS PLAN DOES NOT CONSTITUTE PERMISSION TO VIOLATE ANY APPLICABLE CITY OR COUNTY ORDINANCE, OR STATE LAW, AND SHALL NOT PREVENT THIS DEPARTMENT FROM REQUIRING CORRECTION OF ERRORS OR OMISSIONS IN PLANS, SPECIFICATIONS OR CONSTRUCTION.

AGD
ARCHITECTURE | DESIGN
ANDREW GOODWIN DESIGNS
1238 MONTEREY STREET
SAN LUIS OBISPO, CA 93422
t: (805) 439-1611
www.andrewgoodwin.us

RSM
Design | Engineering
ROGERS STRINGER MCCLELLAND
1981 N. BROADWAY, SUITE 202
WALNUT CREEK, CA 94596
PH. (925) 217-6619
www.rsm-de.com

These drawings are instruments of service and are the property of Andrew Goodwin Designs, Inc. The information represented on these drawings are exclusively for the project indicated and shall not be transferred or otherwise reproduced without express written permission of Andrew Goodwin.
Copyright 2023

SEAL

NOT FOR CONSTRUCTION

PROJECT

TRANQUILLITY HIGH SCHOOL
AQUATIC CENTER MODERNIZATION
6052 Juanche Ave,
Tranquillity, CA 93668

CLIENT

GOLDEN PLAINS UNIFIED SCHOOL DISTRICT

SHEET TITLE

SLIDE A SCHEDULE

PHASE DESCRIPTION
100% CD FCHD APPROVAL
SWIMMING POOL

DATE: 8/26/2025

TECHNICIAN:

PROJECT MANAGER:

JOB NUMBER: 791

SHEET NUMBER
WS1.2-1

PLOT DATE: 4/24/2025 3:26:20 PM

Copyright © 2025 RSM, Inc.-All Rights Reserved-This document was prepared for use only by the client, only for the purposes stated, and within a reasonable time from issuance. Non-commercial, educational, and scientific use of this document by regulatory agencies is regarded as a "fair use" and not a violation of copyright. Regulatory agencies may make additional copies of this document for internal use. Copies may also be made available to the public as required by law. The reprint must acknowledge the copyright and indicate that permission to reprint has been received.

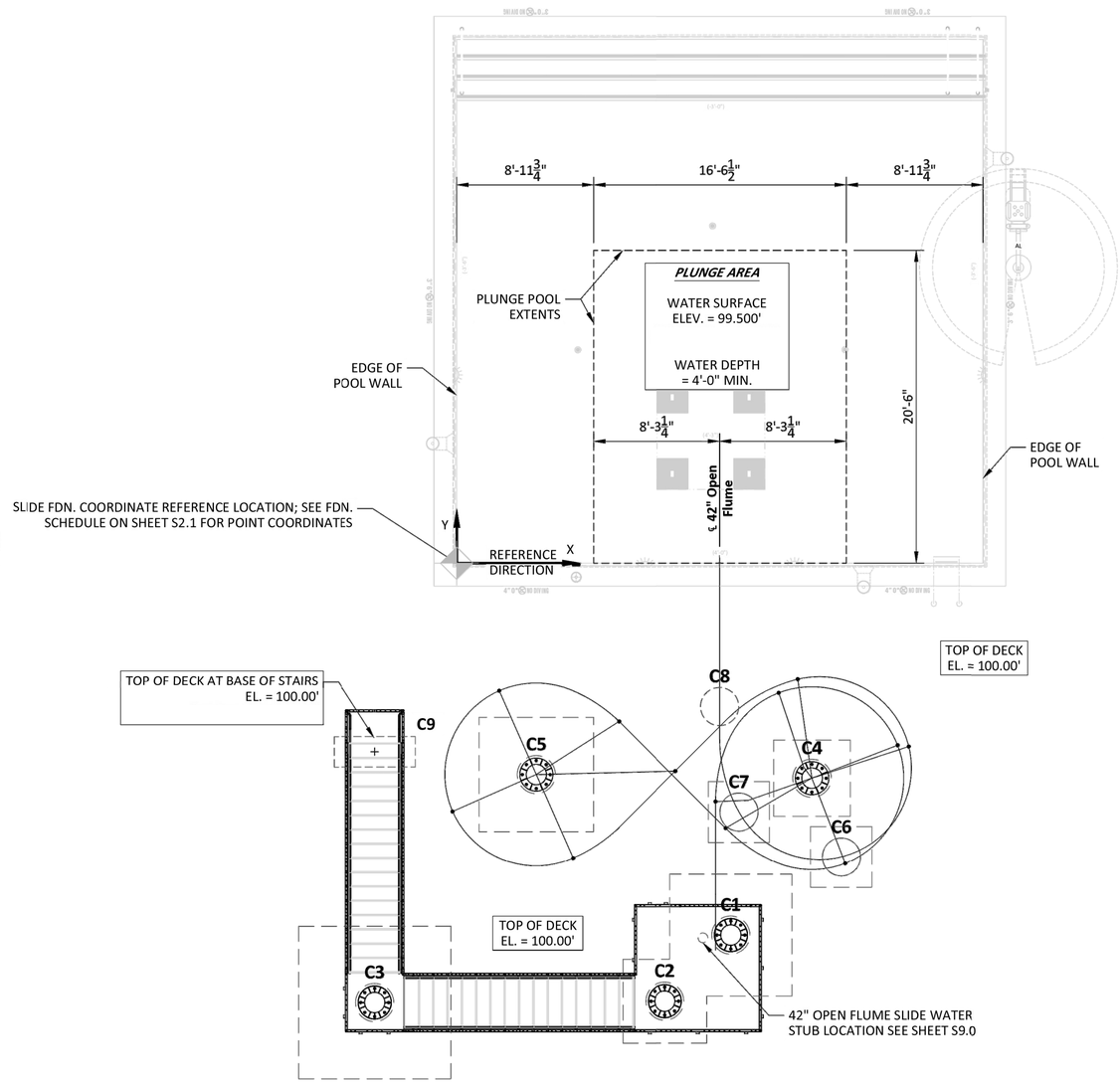

1 / S2.0 FOUNDATION PLAN
SCALE: 1/4" = 1'-0"

© 2025 - Splashtacular, LLC - All Rights Reserved.

This document is the intellectual property of Splashtacular, LLC, which has exclusive rights to proprietary trade secrets and confidential information contained herein. Receipt of permission to use this document does not convey any rights to use the information contained herein without prior written consent of Splashtacular, LLC.

REVISION HISTORY

MARK	DATE		APPROVED
△	mm/dd/yyyy	ISSUED FOR APPROVAL	
△			
△			
△			
△			

The Structural Support System, foundations, decking/treads, fiberglass components including a finite analysis of the ride path depicted on these drawings were designed under the direction of the Professional Engineer who's seal and signature are affixed to this drawing. Any structural design connections of the slide components that are connected to a building are not by Splashtacular.

SPLASHTACULAR®
Waterslides and Waterpark Attractions
401 N.East Street • Paola, Kansas 66071
P 800.844.5334 • F 913.294.2496

TITLE: FOUNDATION LAYOUT		
PROJECT: TRANQUILITY HS		
DATE: 03/26/2025	PROJECT NUMBER: 12125	COUNTRY: USA
SCALE: AS NOTED	DESIGNER: DAR	STATE: CALIFORNIA
CHECKED: RRR	APPROVED: RRR	CITY: TRANQUILITY

S2.0

COUNTY OF FRESNO ENVIRONMENTAL HEALTH DIVISION
1221 Fulton Street – 3rd Floor (559) 600-3357
APPROVED WITH NOTED CORRECTIONS AND SUBJECT TO FIELD INSPECTIONS
BY: DATE: 8/26/25
APPROVAL OF THIS PLAN DOES NOT CONSTITUTE PERMISSION TO VIOLATE ANY APPLICABLE CITY OR COUNTY ORDINANCE, OR STATE LAW, AND SHALL NOT PREVENT THIS DEPARTMENT FROM REQUIRING CORRECTION OF ERRORS OR OMISSIONS IN PLANS, SPECIFICATIONS OR CONSTRUCTION.

AGD
ARCHITECTURE | DESIGN
ANDREW GOODWIN DESIGNS
1238 MONTEREY STREET
SAN LUIS OBISPO, CA 93422
t: (805) 439-1611
www.andrewgoodwin.us

RSM
Design | Engineering
ROGERS STRINGER MCCLELLAND
1981 N. BROADWAY, SUITE 202
WALNUT CREEK, CA 94596
PH. (925) 217-6619
www.rsm-de.com

These drawings are instruments of service and are the property of Andrew Goodwin Designs, Inc. The information represented on these drawings are exclusively for the project indicated and shall not be transferred or otherwise reproduced without express written permission of Andrew Goodwin.
Copyright 2023

SEAL
NOT FOR CONSTRUCTION

PROJECT
TRANQUILLITY HIGH SCHOOL
AQUATIC CENTER MODERNIZATION
6052 Juanche Ave,
Tranquillity, CA 93668

CLIENT
GOLDEN PLAINS UNIFIED SCHOOL DISTRICT

SHEET TITLE
FOUNDATION LAYOUT

PHASE DESCRIPTION
100% CD FCHD APPROVAL
SWIMMING POOL

DATE: 8/26/2025
TECHNICIAN:
PROJECT MANAGER:
JOB NUMBER: 791

SHEET NUMBER
WS1.3-1

PLOT DATE: 4/24/2025 3:26:20 PM

Copyright © 2025 RSM, Inc.-All Rights Reserved-This document was prepared for use only by the client, only for the purposes stated, and within a reasonable time from issuance. Non-commercial, educational, and scientific use of this document by regulatory agencies is regarded as a "fair use" and not a violation of copyright. Regulatory agencies may make additional copies of this document for internal use. Copies may also be made available to the public as required by law. The reprint must acknowledge the copyright and indicate that permission to reprint has been received.

FOUNDATION SCHEDULE

Col No.	Foundation Type	Detail	T.O. First Pour (ft)	T.O.C. Elev (ft)	T.O.D. or T.O.G. Elev (ft)	F.B.E. Elev (ft)	Footing Dimensions (A x B x Thickness)	Footing Reinforcement	Concrete Pedestal Dia (in)	Vertical Reinf.		Vertical Ties		X Coord	Y Coord	Notes
										Size	Qty	Size	Spc			
C1	Spread Footing	01S2.1	-	101.000'	100.000'	95.500'	See 05S2.2 x 18.00"	#6 Bars Spa. At 10" O.C. Max. - Each Way - Top & Bottom	30"	#6	18	#3	8"o.c.	17.986'	-24.407'	-
C2	Spread Footing	01S2.1	-	101.000'	100.000'	95.500'	See 05S2.2 x 18.00"	#6 Bars Spa. At 10" O.C. Max. - Each Way - Top & Bottom	30"	#6	18	#3	8"o.c.	13.653'	-28.740'	-
C3	Spread Footing	01S2.1	-	101.000'	100.000'	95.500'	10'-0" x 10'-0" x 18.00"	13 - #6 Equal Spacing - Each Way - Top & Bottom	30"	#6	18	#3	8"o.c.	-5.389'	-28.823'	-
C4	Spread Footing	01S2.1	-	101.000'	100.000'	95.500'	5'-0" x 5'-0" x 18.00"	7 - #6 Equal Spacing - Each Way - Top & Bottom	30"	#6	18	#4	8"o.c.	23.290'	-14.104'	-
C5	Spread Footing	01S2.1	-	101.000'	100.000'	95.500'	7'-6" x 7'-6" x 18.00"	10 - #6 Equal Spacing - Each Way - Top & Bottom	30"	#6	18	#4	8"o.c.	5.213'	-13.858'	-
C6	Pier On Spread Footing	02S2.1	101.603'	102.270'	100.000'	95.500'	4'-0" x 4'-0" x 18.00"	6 - #6 Equal Spacing - Each Way - Top & Bottom	30"	#6	12	#3	8"o.c.	25.202'	-19.277'	5.
C7	Pier On Spread Footing	02S2.1	100.454'	101.121'	100.000'	95.500'	4'-0" x 4'-0" x 18.00"	6 - #6 Equal Spacing - Each Way - Top & Bottom	30"	#6	12	#3	8"o.c.	18.519'	-16.322'	5.
C8	Concrete pier	03S2.1	99.485'	100.152'	100.000'	95.500'	30"Ø x Depth	-	30"	#6	12	#3	8"o.c.	17.250'	-9.403'	5.
C9	Thickened Slab	04S2.2	-	100.000'	100.000'	99.333'	5'-4" x 2'-0" x 8.00"	SEE DETAIL	-	-	-	-	-	-5.391'	-12.359'	1.

NOTES:
1. COORDINATE CONCRETE PAD W/ SITE CONCRETE (NOT BY SPLASHTACULAR)
2. F.B.E. = FOOTING BEARING ELEVATION
3. T.O.C. = TOP OF CONCRETE PEDESTAL ELEVATION
4. O.C. = ON CENTER
5. PROVIDE DELAY POUR.

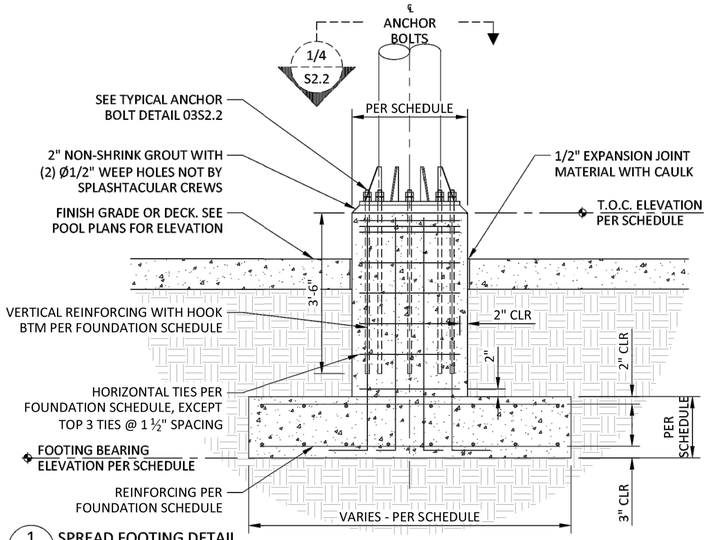

1 / S2.1 SPREAD FOOTING DETAIL
SCALE: 3/4" = 1'-0"

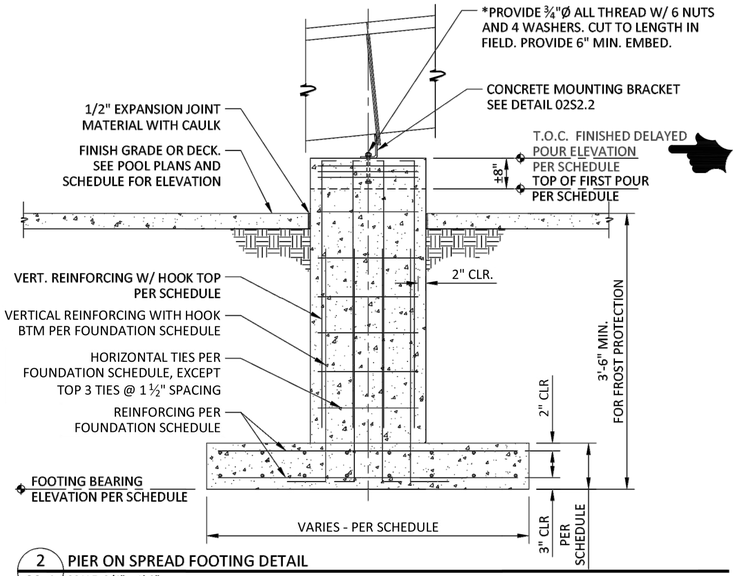

2 / S2.1 PIER ON SPREAD FOOTING DETAIL
SCALE: 3/4" = 1'-0"

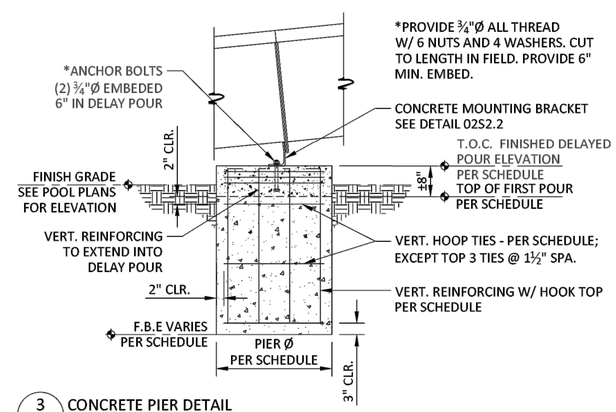

3 / S2.1 CONCRETE PIER DETAIL
SCALE: 3/4" = 1'-0"

© 2025 - Splashtacular, LLC - All Rights Reserved.

This document is the intellectual property of Splashtacular, LLC, which has exclusive rights to proprietary trade secrets and confidential information contained herein. Receipt of permission to use this document does not convey any rights to use the information contained herein without prior written consent of Splashtacular, LLC.

REVISION HISTORY

MARK	DATE		APPROVED
△	mm/dd/yyyy	ISSUED FOR APPROVAL	
△			
△			
△			
△			

The Structural Support System, foundations, decking/treads, fiberglass components including a finite analysis of the ride path depicted on these drawings were designed under the direction of the Professional Engineer who's seal and signature are affixed to this drawing. Any structural design connections of the slide components that are connected to a building are not by Splashtacular.

SPLASHTACULAR®
Waterslides and Waterpark Attractions
401 N.East Street • Paola, Kansas 66071
P 800.844.5334 • F 913.294.2496

TITLE: FOUNDATION SCHEDULE & DETAILS		
PROJECT: TRANQUILITY HS		
DATE: 03/26/2025	PROJECT NUMBER: 12125	COUNTRY: USA
SCALE: AS NOTED	DESIGNER: DAR	STATE: CALIFORNIA
CHECKED: RRR	APPROVED: RRR	CITY: TRANQUILITY

S2.1

COUNTY OF FRESNO ENVIRONMENTAL HEALTH DIVISION
1221 Fulton Street – 3rd Floor (559) 600-3357
APPROVED WITH NOTED CORRECTIONS AND SUBJECT TO FIELD INSPECTIONS
BY: DATE: 8/26/25
APPROVAL OF THIS PLAN DOES NOT CONSTITUTE PERMISSION TO VIOLATE ANY APPLICABLE CITY OR COUNTY ORDINANCE, OR STATE LAW, NOR SHALL IT NOT PREVENT THIS DEPARTMENT FROM REQUIRING CORRECTION OF ERRORS OR OMISSIONS IN PLANS, SPECIFICATIONS OR CONSTRUCTION.

AGD
ARCHITECTURE | DESIGN
ANDREW GOODWIN DESIGNS
1238 MONTEREY STREET
SAN LUIS OBISPO, CA 93422
t: (805) 439-1611
www.andrewgoodwin.us

RSM
Design | Engineering
ROGERS STRINGER MCCLELLAND
1981 N. BROADWAY, SUITE 202
WALNUT CREEK, CA 94596
PH. (925) 217-6619
www.rsm-de.com

These drawings are instruments of service and are the property of Andrew Goodwin Designs, Inc. The information represented on these drawings are exclusively for the project indicated and shall not be transferred or otherwise reproduced without express written permission of Andrew Goodwin.
Copyright 2023

SEAL
NOT FOR CONSTRUCTION

PROJECT
TRANQUILLITY HIGH SCHOOL
AQUATIC CENTER MODERNIZATION
6052 Juanche Ave,
Tranquillity, CA 93668

CLIENT
GOLDEN PLAINS UNIFIED SCHOOL DISTRICT

SHEET TITLE
FOUNDATION SCHEDULE & DETAILS

PHASE DESCRIPTION
100% CD FCHD APPROVAL
SWIMMING POOL

DATE: 8/26/2025
TECHNICIAN:
PROJECT MANAGER:
JOB NUMBER: 791

SHEET NUMBER
WS1.4-1

PLOT DATE: 4/24/2025 3:26:20 PM

Copyright © 2025 RSM, Inc.-All Rights Reserved-This document was prepared for use only by the client, only for the purposes stated, and within a reasonable time from issuance. Non-commercial, educational, and scientific use of this document by regulatory agencies is regarded as a "fair use" and not a violation of copyright. Regulatory agencies may make additional copies of this document for internal use. Copies may also be made available to the public as required by law. The reprint must acknowledge the copyright and indicate that permission to reprint has been received.

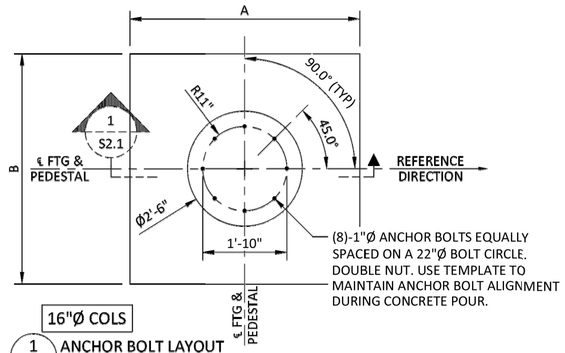

1 / S2.2 ANCHOR BOLT LAYOUT
SCALE: 3/4" = 1'-0"

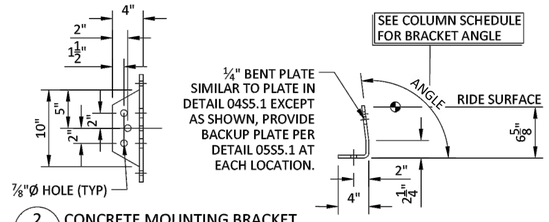

2 / S2.2 CONCRETE MOUNTING BRACKET
SCALE: 1-1/2" = 1'-0"

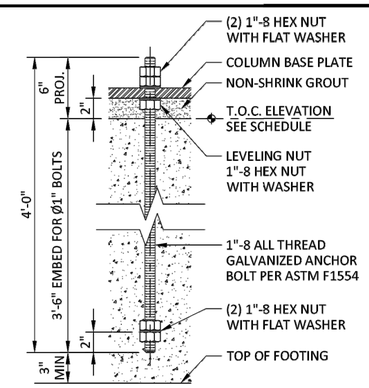

3 / S2.2 ANCHOR BOLT DETAIL
SCALE: 2" = 1'-0"

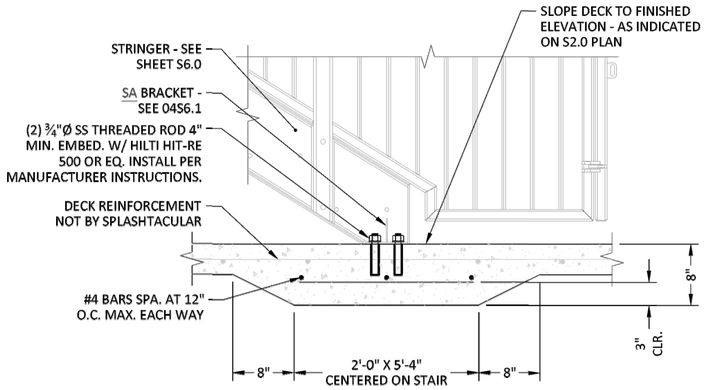

4 / S2.2 STAIR STRINGER TO DECK CONNECTION DETAIL
SCALE: 1-1/2" = 1'-0"

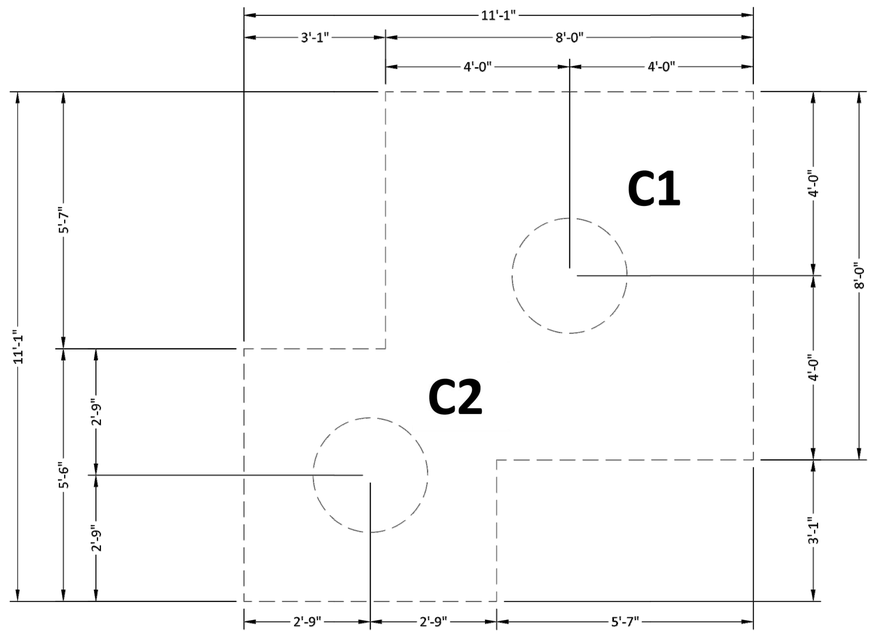

5 / S2.2 COMBINED FOOTING DETAIL
SCALE: 1-1/2" = 1'-0"

© 2025 - Splashtacular, LLC - All Rights Reserved.

This document is the intellectual property of Splashtacular, LLC, which has exclusive rights to proprietary trade secrets and confidential information contained herein. Receipt of permission to use this document does not convey any rights to use the information contained herein without prior written consent of Splashtacular, LLC.

REVISION HISTORY

MARK	DATE		APPROVED
△	mm/dd/yyyy	ISSUED FOR APPROVAL	
△			
△			
△			
△			

The Structural Support System, foundations, decking/treads, fiberglass components including a finite analysis of the ride path depicted on these drawings were designed under the direction of the Professional Engineer who's seal and signature are affixed to this drawing. Any structural design connections of the slide components that are connected to a building are not by Splashtacular.

SPLASHTACULAR®
Waterslides and Waterpark Attractions
401 N.East Street • Paola, Kansas 66071
P 800.844.5334 • F 913.294.2496

TITLE: FOUNDATION DETAILS		
PROJECT: TRANQUILITY HS		
DATE: 03/26/2025	PROJECT NUMBER: 12125	COUNTRY: USA
SCALE: AS NOTED	DESIGNER: DAR	STATE: CALIFORNIA
CHECKED: RRR	APPROVED: RRR	CITY: TRANQUILITY

S2.2

COUNTY OF FRESNO ENVIRONMENTAL HEALTH DIVISION
1221 Fulton Street – 3rd Floor (559) 600-3357
APPROVED WITH NOTED CORRECTIONS AND SUBJECT TO FIELD INSPECTIONS
BY: DATE: 8/26/25
APPROVAL OF THIS PLAN DOES NOT CONSTITUTE PERMISSION TO VIOLATE ANY FEDERAL, STATE, CITY OR COUNTY ORDINANCE, OR STATE LAW, AND SHALL NOT PREVENT THIS DEPARTMENT FROM REQUIRING CORRECTION OF ERRORS OR OMISSIONS IN PLANS, SPECIFICATIONS OR CONSTRUCTION.

AGD
ARCHITECTURE | DESIGN
ANDREW GOODWIN DESIGNS
1238 MONTEREY STREET
SAN LUIS OBISPO, CA 93422
t: (805) 439-1611
www.andrewgoodwin.us

RSM
Design | Engineering
ROGERS STRINGER MCCLELLAND
1981 N. BROADWAY, SUITE 202
WALNUT CREEK, CA 94596
PH. (925) 217-6619
www.rsm-de.com

These drawings are instruments of service and are the property of Andrew Goodwin Designs, Inc. The information represented on these drawings are exclusively for the project indicated and shall not be transferred or otherwise reproduced without express written permission of Andrew Goodwin.
Copyright 2023

SEAL
NOT FOR CONSTRUCTION

PROJECT
TRANQUILLITY HIGH SCHOOL
AQUATIC CENTER MODERNIZATION
6052 Juanche Ave,
Tranquillity, CA 93668

CLIENT
GOLDEN PLAINS UNIFIED SCHOOL DISTRICT

SHEET TITLE
FOUNDATION DETAILS

PHASE DESCRIPTION
100% CD FCHD APPROVAL
SWIMMING POOL

DATE: 8/26/2025
TECHNICIAN:
PROJECT MANAGER:
JOB NUMBER: 791
SHEET NUMBER
WS1.5-1

PLOT DATE: 4/24/2025 3:26:20 PM

Copyright © 2025 RSM, Inc.-All Rights Reserved-This document was prepared for use only by the client, only for the purposes stated, and within a reasonable time from issuance. Non-commercial, educational, and scientific use of this document by regulatory agencies is regarded as a "fair use" and not a violation of copyright. Regulatory agencies may make additional copies of this document for internal use. Copies may also be made available to the public as required by law. The reprint must acknowledge the copyright and indicate that permission to reprint has been received.

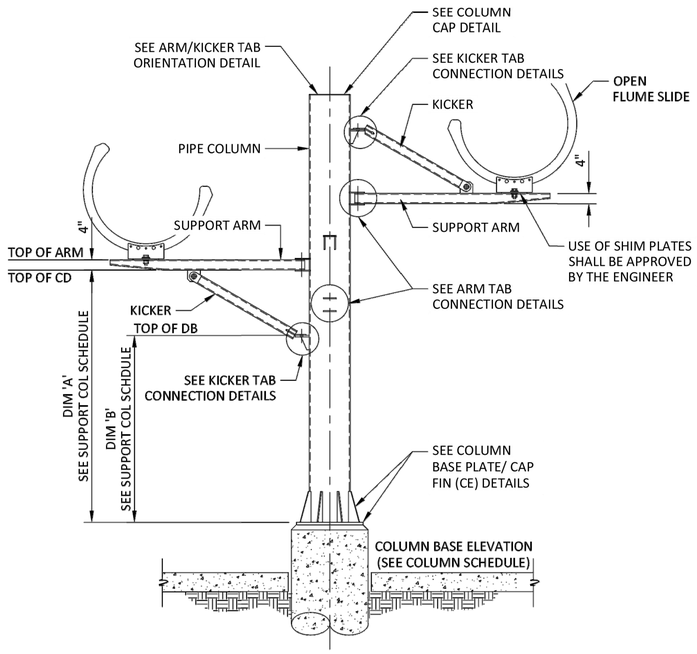

1 S3.0 COLUMN/ARM ARRANGEMENT DETAIL
SCALE: 1/2" = 1'-0"

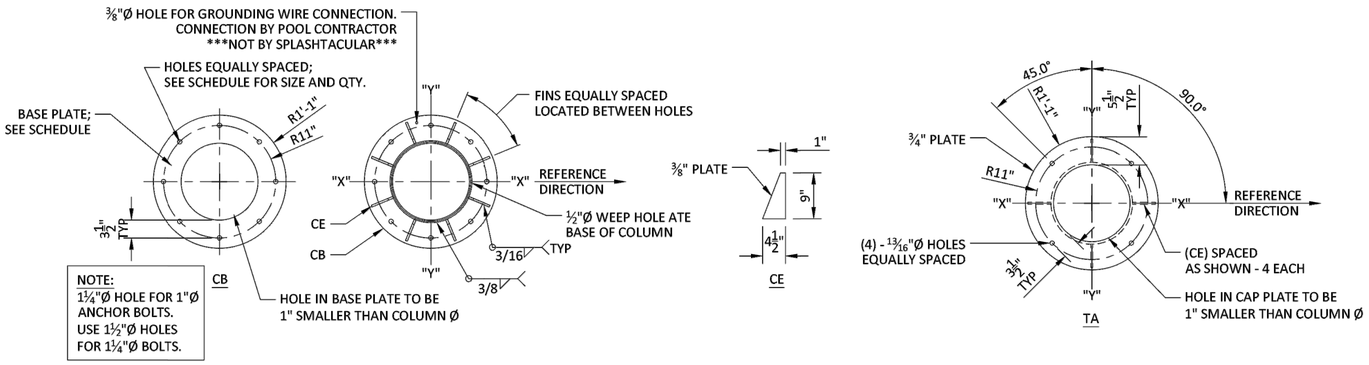

4 S3.0 COLUMN BASE PLATE DETAIL
SCALE: 1" = 1'-0"

5 S3.0 PLATFORM COLUMN CAP PLATE DETAIL
SCALE: 1" = 1'-0"

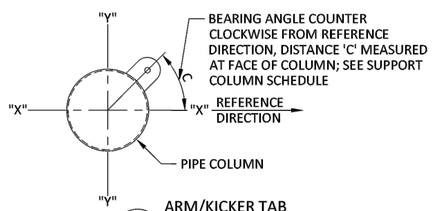

2 S3.0 ARM/KICKER TAB ORIENTATION DETAIL
SCALE: 1" = 1'-0"

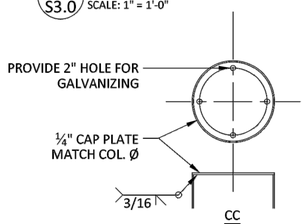

3 S3.0 COLUMN CAP PLATE DETAIL
SCALE: 1" = 1'-0"

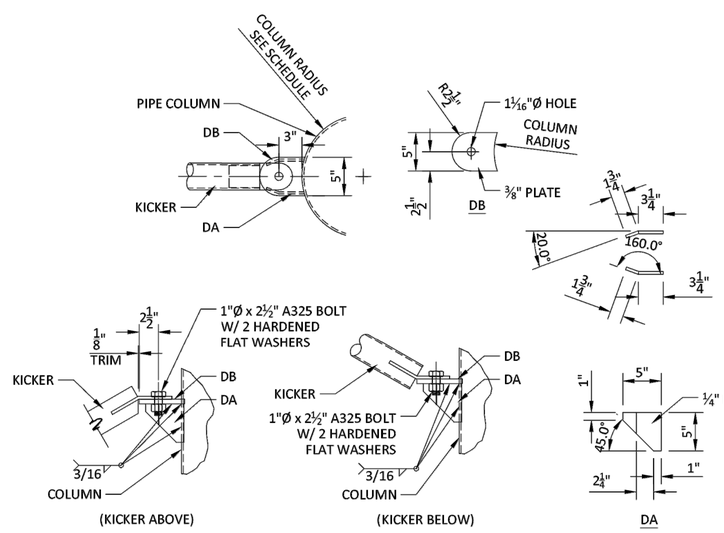

6 S3.0 KICKER TAB CONNECTION DETAILS
SCALE: 1 1/2" = 1'-0"

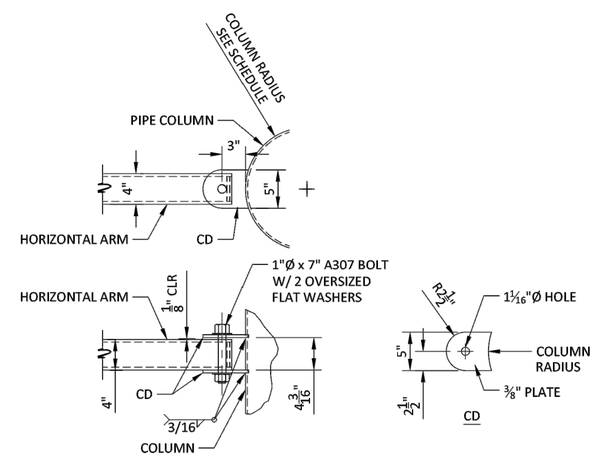

7 S3.0 ARM TAB CONNECTION DETAILS
SCALE: 1 1/2" = 1'-0"

© 2025 - Splashtacular, LLC - All Rights Reserved.

This document is the intellectual property of Splashtacular, LLC, which has exclusive rights to proprietary trade secrets and confidential information contained herein. Receipt of permission to use this document does not convey any rights to use the information contained herein without prior written consent of Splashtacular, LLC.

REVISION HISTORY

MARK	DATE		APPROVED
△	mm/dd/yyyy	ISSUED FOR APPROVAL	
△			
△			
△			
△			

The Structural Support System, foundations, decking/treads, fiberglass components including a finite analysis of the ride path depicted on these drawings were designed under the direction of the Professional Engineer who's seal and signature are affixed to this drawing. Any structural design connections of the slide components that are connected to a building are not by Splashtacular.

SPLASHTACULAR®
Waterslides and Waterpark Attractions
401 N.East Street • Paola, Kansas 66071
P 800.844.5334 • F 913.294.2496

TITLE: COLUMN DETAILS

PROJECT: TRANQUILITY HS		
DATE: 03/26/2025	PROJECT NUMBER: 12125	COUNTRY: USA
SCALE: AS NOTED	DESIGNER: DAR	STATE: CALIFORNIA
CHECKED: RRR	APPROVED: RRR	CITY: TRANQULITY

S3.0

COUNTY OF FRESNO ENVIRONMENTAL HEALTH DIVISION
1221 Fulton Street – 3rd Floor (559) 600-3357
APPROVED WITH NOTED CORRECTIONS AND SUBJECT TO FIELD INSPECTIONS
DATE: 8/26/25
BY:
APPROVAL OF THIS PLAN DOES NOT CONSTITUTE PERMISSION TO VIOLATE ANY PREVAILING CITY OR COUNTY ORDINANCE, OR STATE LAW AND SHALL NOT PREVENT THIS DEPARTMENT FROM REQUIRING CORRECTION OF ERRORS OR OMISSIONS IN PLANS, SPECIFICATIONS OR CONSTRUCTION.

AGD ARCHITECTURE | DESIGN
ANDREW GOODWIN DESIGNS
1238 MONTEREY STREET
SAN LUIS OBISPO, CA 93422
t: (805) 439-1611
www.andrewgoodwin.us

RSM Design | Engineering
ROGERS STRINGER MCCLELLAND
1981 N. BROADWAY, SUITE 202
WALNUT CREEK, CA 94596
PH. (925) 217-6619
www.rsm-de.com

These drawings are instruments of service and are the property of Andrew Goodwin Designs, Inc. The information represented on these drawings are exclusively for the project indicated and shall not be transferred or otherwise reproduced without express written permission of Andrew Goodwin.
Copyright 2023

SEAL
NOT FOR CONSTRUCTION
8/26/25

PROJECT
TRANQUILLITY HIGH SCHOOL
AQUATIC CENTER MODERNIZATION
6052 Juanche Ave,
Tranquillity, CA 93668

CLIENT
GOLDEN PLAINS UNIFIED SCHOOL DISTRICT

SHEET TITLE
COLUMN DETAILS

PHASE DESCRIPTION
100% CD FCHD APPROVAL SWIMMING POOL

DATE: 8/26/2025
TECHNICIAN:
PROJECT MANAGER:
JOB NUMBER: 791
SHEET NUMBER
WS1.6-1

PLOT DATE: 4/24/2025 3:26:20 PM

Copyright © 2025 RSM, Inc.-All Rights Reserved-This document was prepared for use only by the client, only for the purposes stated, and within a reasonable time from issuance. Non-commercial, educational, and scientific use of this document by regulatory agencies is regarded as a "fair use" and not a violation of copyright. Regulatory agencies may make additional copies of this document for internal use. Copies may also be made available to the public as required by law. The reprint must acknowledge the copyright and indicate that permission to reprint has been received.

SUPPORT COLUMN SCHEDULE

Col No.	Column Type	Detail	Column Elev	Column Size (Dim x Wall)	Pedestal (Dia)	Base Plate (Thick x Dim)	Anchor Bolts			X Coord	Y Coord	Bracket Height	Bracket Angle	Column Supports
							Dia	Embed	Qty					
C1	Steel Monopole	01S4.1	119.115'	16"Ø x 1/4"	30"Ø	1" x 26"Ø	1"	42"	8	17.986'	-24.407'	-	-	TW1
C2	Steel Monopole	02S4.1	119.115'	16"Ø x 1/4"	30"Ø	1" x 26"Ø	1"	42"	8	13.653'	-28.740'	-	-	TW1
C3	Steel Monopole	03S4.1	109.198'	16"Ø x 1/4"	30"Ø	1" x 26"Ø	1"	42"	8	-5.389'	-28.823'	-	-	TW18
C4	Steel Radial Arm	04S4.1	120.018'	16"Ø x 1/4"	30"Ø	1" x 26"Ø	1"	42"	8	23.290'	-14.104'	-	-	AA23, AA3, AA25, AA9, AA5, AA7, AA11
C5	Steel Radial Arm	01S4.2	113.012'	16"Ø x 1/4"	30"Ø	1" x 26"Ø	1"	42"	8	5.213'	-13.858'	-	-	AA17, AA19, AA21, AA13, AA15
C6	Concrete Monopole	02S2.1	102.270'	30"Ø	-	-	-	-	-	25.202'	-19.277'	6.625	98.32°	A27
C7	Concrete Monopole	02S2.1	101.121'	30"Ø	-	-	-	-	-	18.519'	-16.322'	6.625	98.32°	A29
C8	Concrete Monopole	03S2.1	100.152'	30"Ø	-	-	-	-	-	17.250'	-9.403'	6.625	94.00°	A31

© 2025 - Splashtacular, LLC - All Rights Reserved.

This document is the intellectual property of Splashtacular, LLC, which has exclusive rights to proprietary trade secrets and confidential information contained herein. Receipt of permission to use this document does not convey any rights to use the information contained herein without prior written consent of Splashtacular, LLC.

REVISION HISTORY

MARK	DATE		APPROVED
△	mm/dd/yyyy	ISSUED FOR APPROVAL	
△			
△			
△			
△			

The Structural Support System, foundations, decking/treads, fiberglass components including a finite analysis of the ride path depicted on these drawings were designed under the direction of the Professional Engineer who's seal and signature are affixed to this drawing. Any structural design connections of the slide components that are connected to a building are not by Splashtacular.

SPLASHTACULAR®
Waterslides and Waterpark Attractions
401 N.East Street • Paola, Kansas 66071
P 800.844.5334 • F 913.294.2496

TITLE: COLUMN LAYOUT SCHEDULE

PROJECT: TRANQUILITY HS		
DATE: 03/26/2025	PROJECT NUMBER: 12125	COUNTRY: USA
SCALE: NTS	DESIGNER: DAR	STATE: CALIFORNIA
CHECKED: RRR	APPROVED: RRR	CITY: TRANQUILITY

S4.0

COUNTY OF FRESNO ENVIRONMENTAL HEALTH DIVISION
1221 Fulton Street – 3rd Floor (559) 600-3357
APPROVED
WITH NOTED CORRECTIONS AND
SUBJECT TO FIELD INSPECTIONS
BY: DATE: 8/26/25
APPROVAL OF THIS PLAN DOES NOT CONSTITUTE PERMISSION TO VIOLATE ANY APPLICABLE CITY OR COUNTY ORDINANCE, OR STATE LAW, AND SHALL NOT PREVENT THE DEPARTMENT FROM REQUIRING CORRECTION OF ERRORS OR OMISSIONS IN PLANS, SPECIFICATIONS OR CONSTRUCTION.

AGD
ARCHITECTURE | DESIGN
ANDREW GOODWIN DESIGNS
1238 MONTEREY STREET
SAN LUIS OBISPO, CA 93422
t: (805) 439-1611
www.andrewgoodwin.us

RSM
Design | Engineering
ROGERS STRINGER MCCLELLAND
1981 N. BROADWAY, SUITE 202
WALNUT CREEK, CA 94596
PH. (925) 217-6619
www.rsm-de.com

These drawings are instruments of service and are the property of Andrew Goodwin Designs, Inc. The information represented on these drawings are exclusively for the project indicated and shall not be transferred or otherwise reproduced without express written permission of Andrew Goodwin.
Copyright 2023

SEAL

NOT FOR CONSTRUCTION

PROJECT

TRANQUILLITY HIGH SCHOOL
AQUATIC CENTER MODERNIZATION
6052 Juanche Ave,
Tranquillity, CA 93668

CLIENT

GOLDEN PLAINS UNIFIED SCHOOL DISTRICT

SHEET TITLE

COLUMN LAYOUT SCHEDULE

PHASE DESCRIPTION
100% CD FCHD APPROVAL
SWIMMING POOL

DATE: 8/26/2025

TECHNICIAN:

PROJECT MANAGER:

JOB NUMBER: 791

SHEET NUMBER
WS1.7-1

PLOT DATE: 4/24/2025 3:26:20 PM

Copyright © 2025 RSM, Inc.-All Rights Reserved-This document was prepared for use only by the client, only for the purposes stated, and within a reasonable time from issuance. Non-commercial, educational, and scientific use of this document by regulatory agencies is regarded as a "fair use" and not a violation of copyright. Regulatory agencies may make additional copies of this document for internal use. Copies may also be made available to the public as required by law. The reprint must acknowledge the copyright and indicate that permission to reprint has been received.

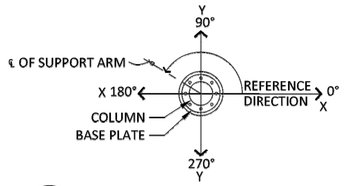

10 / S4.1 SUPPORT ARM/AXIS ORIENTATION
SCALE: 1/2" = 1'-0"

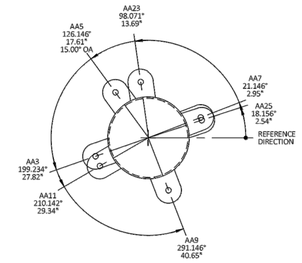

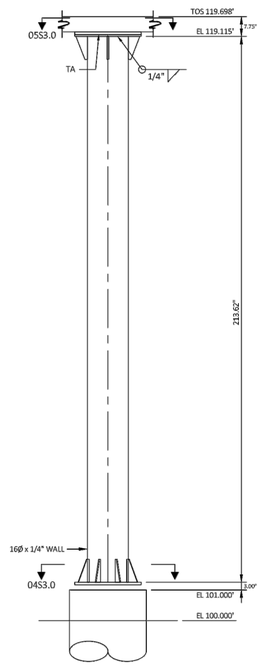

COLUMN C1 — 1 / S4.1 — 1/2" = 1'-0"

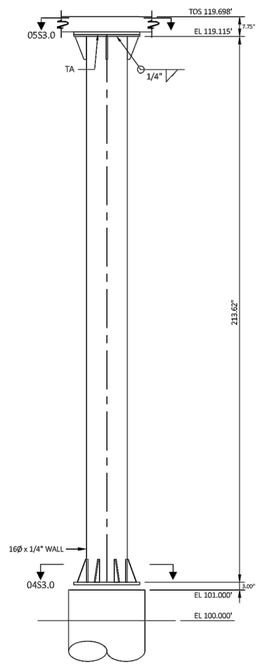

COLUMN C2 — 2 / S4.1 — 1/2" = 1'-0"

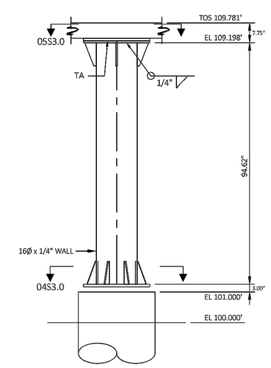

COLUMN C3 — 3 / S4.1 — 1/2" = 1'-0"

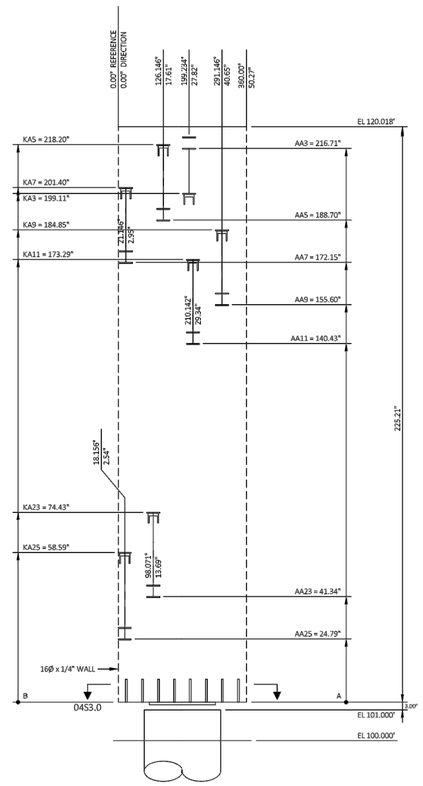

COLUMN C4 — 4 / S4.1 — 1/2" = 1'-0"

© 2025 - Splashtacular, LLC - All Rights Reserved.

This document is the intellectual property of Splashtacular, LLC, which has exclusive rights to proprietary trade secrets and confidential information contained herein. Receipt of permission to use this document does not convey any rights to use the information contained herein without prior written consent of Splashtacular, LLC.

REVISION HISTORY

MARK	DATE		APPROVED
1	mm/dd/yyyy	ISSUED FOR APPROVAL	
2			
3			
4			
5			

The Structural Support System, foundations, decking/treads, fiberglass components including a finite analysis of the ride path depicted on these drawings were designed under the direction of the Professional Engineer who's seal and signature are affixed to this drawing. Any structural design connections of the slide components that are connected to a building are not by Splashtacular.

SPLASHTACULAR®
Waterslides and Waterpark Attractions
401 N.East Street • Paola, Kansas 66071
P 800.844.5334 • F 913.294.2496

TITLE: COLUMN DETAILS		
PROJECT: TRANQUILITY HS		
DATE: 03/26/2025	PROJECT NUMBER: 12125	COUNTRY: USA
SCALE: AS NOTED	DESIGNER: DAR	STATE: CALIFORNIA
CHECKED: RRR	APPROVED: RRR	CITY: TRANQULITY

S4.1

COUNTY OF FRESNO ENVIRONMENTAL HEALTH DIVISION
1221 Fulton Street – 3rd Floor (559) 600-3357
APPROVED
WITH NOTED CORRECTIONS AND SUBJECT TO FIELD INSPECTIONS
BY: DATE: 8/26/25
APPROVAL OF THIS PLAN DOES NOT CONSTITUTE PERMISSION TO VIOLATE ANY APPLICABLE CITY OR COUNTY ORDINANCE, OR STATE LAW, AND SHALL NOT PREVENT THIS DEPARTMENT FROM REQUIRING CORRECTION OF ERRORS OR OMISSIONS IN PLANS, SPECIFICATIONS OR CONSTRUCTION.

AGD
ARCHITECTURE | DESIGN
ANDREW GOODWIN DESIGNS
1238 MONTEREY STREET
SAN LUIS OBISPO, CA 93422
t: (805) 439-1611
www.andrewgoodwin.us

RSM
Design | Engineering
ROGERS STRINGER MCCLELLAND
1981 N. BROADWAY, SUITE 202
WALNUT CREEK, CA 94596
PH. (925) 217-6619
www.rsm-de.com

These drawings are instruments of service and are the property of Andrew Goodwin Designs, Inc. The information represented on these drawings are exclusively for the project indicated and shall not be transferred or otherwise reproduced without express written permission of Andrew Goodwin.
Copyright 2023

SEAL
NOT FOR CONSTRUCTION

PROJECT
TRANQUILLITY HIGH SCHOOL
AQUATIC CENTER MODERNIZATION
6052 Juanche Ave,
Tranquillity, CA 93668

CLIENT
GOLDEN PLAINS UNIFIED SCHOOL DISTRICT

SHEET TITLE
COLUMN DETAILS

PHASE DESCRIPTION
100% CD FCHD APPROVAL
SWIMMING POOL

DATE: 8/26/2025
TECHNICIAN:
PROJECT MANAGER:
JOB NUMBER: 791

SHEET NUMBER
WS1.8-1

PLOT DATE: 4/24/2025 3:26:20 PM

Copyright © 2025 RSM, Inc.-All Rights Reserved-This document was prepared for use only by the client, only for the purposes stated, and within a reasonable time from issuance. Non-commercial, educational, and scientific use of this document by regulatory agencies is regarded as a "fair use" and not a violation of copyright. Regulatory agencies may make additional copies of this document for internal use. Copies may also be made available to the public as required by law. The reprint must acknowledge the copyright and indicate that permission to reprint has been received.

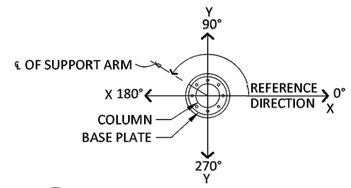

10 / S4.2 SUPPORT ARM/AXIS ORIENTATION
SCALE: 1/2" = 1'-0"

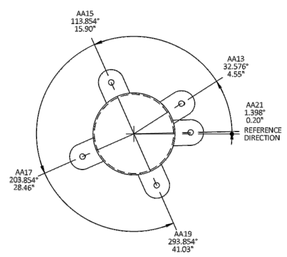

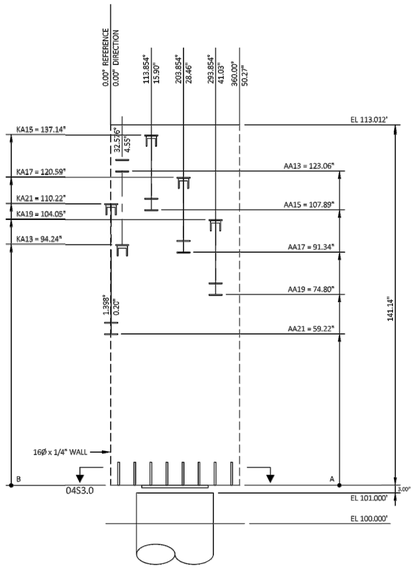

COLUMN C5
1/2" = 1'-0"
1 / S4.2

© 2025 - Splashtacular, LLC - All Rights Reserved.

This document is the intellectual property of Splashtacular, LLC, which has exclusive rights to proprietary trade secrets and confidential information contained herein. Receipt of permission to use this document does not convey any rights to use the information contained herein without prior written consent of Splashtacular, LLC.

REVISION HISTORY

MARK	DATE		APPROVED
△	mm/dd/yyyy	ISSUED FOR APPROVAL	
△			
△			
△			
△			

The Structural Support System, foundations, decking/treads, fiberglass components including a finite analysis of the ride path depicted on these drawings were designed under the direction of the Professional Engineer who's seal and signature are affixed to this drawing. Any structural design connections of the slide components that are connected to a building are not by Splashtacular.

SPLASHTACULAR®
Waterslides and Waterpark Attractions
401 N.East Street • Paola, Kansas 66071
P 800.844.5334 • F 913.294.2496

TITLE: COLUMN DETAILS		
PROJECT: TRANQUILITY HS		
DATE: 03/26/2025	PROJECT NUMBER: 12125	COUNTRY: USA
SCALE: AS NOTED	DESIGNER: DAR	STATE: CALIFORNIA
CHECKED: RRR	APPROVED: RRR	CITY: TRANQULITY

S4.2

COUNTY OF FRESNO ENVIRONMENTAL HEALTH DIVISION
1221 Fulton Street – 3rd Floor (559) 600-3357
APPROVED
WITH NOTED CORRECTIONS AND
SUBJECT TO FIELD INSPECTIONS
BY: DATE: 8/26/25
APPROVAL BY THE DEPARTMENT DOES NOT CONSTITUTE PERMISSION TO VIOLATE ANY APPLICABLE CITY OR COUNTY ORDINANCE, OR STATE LAW, AND SHALL NOT PREVENT THIS DEPARTMENT FROM REQUIRING CORRECTION OF ERRORS OR OMISSIONS IN PLANS, SPECIFICATIONS OR CONSTRUCTION.

AGD
ARCHITECTURE | DESIGN
ANDREW GOODWIN DESIGNS
1238 MONTEREY STREET
SAN LUIS OBISPO, CA 93422
t: (805) 439-1611
www.andrewgoodwin.us

RSM
Design | Engineering
ROGERS STRINGER MCCLELLAND
1981 N. BROADWAY, SUITE 202
WALNUT CREEK, CA 94596
PH. (925) 217-6619
www.rsm-de.com

These drawings are instruments of service and are the property of Andrew Goodwin Designs, Inc. The information represented on these drawings are exclusively for the project indicated and shall not be transferred or otherwise reproduced without express written permission of Andrew Goodwin. Copyright 2023

SEAL
NOT FOR CONSTRUCTION

PROJECT
TRANQUILLITY HIGH SCHOOL
AQUATIC CENTER MODERNIZATION
6052 Juanche Ave,
Tranquillity, CA 93668

CLIENT
GOLDEN PLAINS UNIFIED SCHOOL DISTRICT

SHEET TITLE
COLUMN DETAILS

PHASE DESCRIPTION
100% CD FCHD APPROVAL
SWIMMING POOL

DATE: 8/26/2025
TECHNICIAN:
PROJECT MANAGER:
JOB NUMBER: 791

SHEET NUMBER
WS1.9-1

PLOT DATE: 4/24/2025 3:26:20 PM

Copyright © 2025 RSM, Inc.-All Rights Reserved-This document was prepared for use only by the client, only for the purposes stated, and within a reasonable time from issuance. Non-commercial, educational, and scientific use of this document by regulatory agencies is regarded as a "fair use" and not a violation of copyright. Regulatory agencies may make additional copies of this document for internal use. Copies may also be made available to the public as required by law. The reprint must acknowledge the copyright and indicate that permission to reprint has been received.

SUPPORT ARM SCHEDULE FOR SLIDE-A

Arm No.	Arm Type	Detail	Elevation	Bearing	Off-Axis	Arm Length	Radius Length	H-Distance	T-Distance	Bolt to Bolt Length	Vertical Offset	Kicker Number	K Position	K Length	K Angle	Bracket Height	Bracket Angle	Arm Note
AA3	Side Mount Arm	02SS.3	119.476'	199.23°	0.00°	35.04°	52.54°	29.54°	13.25°	28.29°	-	KA3	Kicker - Below (Tube)	27.28°	30.00°	-	98.32°	-
AA5	Typical Arm	01SS.1	117.308'	108.49°	15.00°	76.71°	72.46°	43.96°	18.75°	42.71°	-	KA5	Kicker - Above (Plate)	48.18°	30.00°	6.63°	98.32°	-
AA7	Typical Arm	01SS.1	115.929'	21.15°	0.00°	76.27°	72.02°	43.52°	18.75°	42.27°	-	KA7	Kicker - Above (Plate)	47.67°	30.00°	6.63°	98.32°	-
AA9	Typical Arm	01SS.1	114.550'	291.15°	0.00°	76.27°	72.02°	43.52°	18.75°	42.27°	-	KA9	Kicker - Above (Plate)	47.67°	30.00°	6.63°	98.32°	-
AA11	Typical Arm	01SS.1	113.286'	210.14°	0.00°	82.52°	78.27°	49.77°	18.75°	48.52°	-	KA11	Kicker - Above (Plate)	54.89°	30.00°	6.63°	98.32°	-
AA13	Typical Arm	02SS.1	111.839'	32.58°	0.00°	81.72°	77.47°	48.97°	18.75°	47.72°	-	KA13	Kicker - Below (Tube)	49.71°	30.00°	6.63°	98.32°	-
AA15	Typical Arm	01SS.1	110.574'	113.85°	0.00°	76.27°	72.02°	43.52°	18.75°	42.27°	-	KA15	Kicker - Above (Plate)	47.67°	30.00°	6.63°	98.32°	-
AA17	Typical Arm	01SS.1	109.195'	203.85°	0.00°	76.27°	72.02°	43.52°	18.75°	42.27°	-	KA17	Kicker - Above (Plate)	47.67°	30.00°	6.63°	98.32°	-
AA19	Typical Arm	01SS.1	107.816'	293.85°	0.00°	76.27°	72.02°	43.52°	18.75°	42.27°	-	KA19	Kicker - Above (Plate)	47.67°	30.00°	6.63°	98.32°	-
AA21	Typical Arm	01SS.1	106.518'	1.40°	0.00°	113.95°	109.70°	81.20°	18.75°	79.95°	-	KA21	Kicker - Above (Plate)	91.18°	30.00°	6.63°	98.32°	-
AA23	Typical Arm	01SS.1	105.028'	98.07°	0.00°	82.93°	78.68°	50.18°	18.75°	48.93°	-	KA23	Kicker - Above (Plate)	55.36°	30.00°	6.63°	98.32°	-
AA25	Typical Arm	01SS.1	103.649'	18.16°	0.00°	84.16°	79.91°	51.41°	18.75°	50.16°	-	KA25	Kicker - Above (Plate)	56.78°	30.00°	6.63°	98.32°	-

© 2025 - Splashtacular, LLC - All Rights Reserved.

This document is the intellectual property of Splashtacular, LLC, which has exclusive rights to proprietary trade secrets and confidential information contained herein. Receipt of permission to use this document does not convey any rights to use the information contained herein without prior written consent of Splashtacular, LLC.

REVISION HISTORY

MARK	DATE		APPROVED
△	mm/dd/yyyy	ISSUED FOR APPROVAL	
△			
△			
△			
△			

The Structural Support System, foundations, decking/treads, fiberglass components including a finite analysis of the ride path depicted on these drawings were designed under the direction of the Professional Engineer who's seal and signature are affixed to this drawing. Any structural design connections of the slide components that are connected to a building are not by Splashtacular.

SPLASHTACULAR®
Waterslides and Waterpark Attractions
401 N.East Street • Paola, Kansas 66071
P 800.844.5334 • F 913.294.2496

TITLE: ARM SCHEDULE
PROJECT: TRANQUILITY HS
DATE: 03/26/2025 | PROJECT NUMBER: 12125 | COUNTRY: USA
SCALE: NTS | DESIGNER: DAR | STATE: CALIFORNIA
CHECKED: RRR | APPROVED: RRR | CITY: TRANQUILITY

S5.0

COUNTY OF FRESNO ENVIRONMENTAL HEALTH DIVISION
1221 Fulton Street – 3rd Floor (559) 600-3357
APPROVED
WITH NOTED CORRECTIONS AND
SUBJECT TO FIELD INSPECTIONS
BY: _____ DATE: 8/26/25
APPROVAL OF THIS PLAN DOES NOT CONSTITUTE PERMISSION TO VIOLATE ANY APPLICABLE CITY OR COUNTY ORDINANCE OR STATE LAW, AND SHALL NOT PREVENT THIS DEPARTMENT FROM REQUIRING CORRECTION OF ERRORS OR OMISSIONS IN PLANS, SPECIFICATIONS OR CONSTRUCTION.

AGD
ARCHITECTURE | DESIGN
ANDREW GOODWIN DESIGNS
1238 MONTEREY STREET
SAN LUIS OBISPO, CA 93422
t: (805) 439-1611
www.andrewgoodwin.us

RSM
Design | Engineering
ROGERS STRINGER MCCLELLAND
1981 N. BROADWAY, SUITE 202
WALNUT CREEK, CA 94596
PH. (925) 217-6619
www.rsm-de.com

These drawings are instruments of service and are the property of Andrew Goodwin Designs, Inc. The information represented on these drawings are exclusively for the project indicated and shall not be transferred or otherwise reproduced without express written permission of Andrew Goodwin.
Copyright 2023

SEAL
NOT FOR CONSTRUCTION

PROJECT
TRANQUILLITY HIGH SCHOOL
AQUATIC CENTER MODERNIZATION
6052 Juanche Ave,
Tranquillity, CA 93668

CLIENT
GOLDEN PLAINS UNIFIED SCHOOL DISTRICT

SHEET TITLE
ARM SCHEDULE

PHASE DESCRIPTION
100% CD FCHD APPROVAL
SWIMMING POOL

DATE: 8/26/2025
TECHNICIAN:
PROJECT MANAGER:
JOB NUMBER: 791

SHEET NUMBER
WS1.10-1

PLOT DATE: 4/24/2025 3:26:20 PM

Copyright © 2025 RSM, Inc.-All Rights Reserved-This document was prepared for use only by the client, only for the purposes stated, and within a reasonable time from issuance. Non-commercial, educational, and scientific use of this document by regulatory agencies is regarded as a "fair use" and not a violation of copyright. Regulatory agencies may make additional copies of this document for internal use. Copies may also be made available to the public as required by law. The reprint must acknowledge the copyright and indicate that permission to reprint has been received.

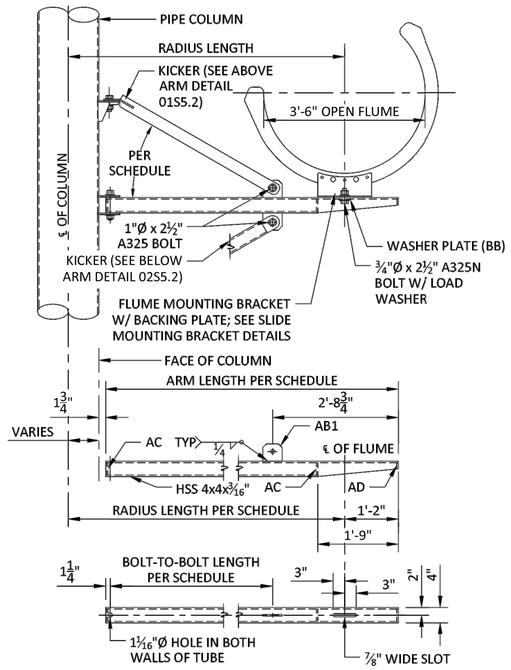

1/2 S5.1 TYPICAL ARM-KICKER ABOVE/BELOW
SCALE: 3/4" = 1'-0"

© 2025 - Splashtacular, LLC - All Rights Reserved.

This document is the intellectual property of Splashtacular, LLC, which has exclusive rights to proprietary trade secrets and confidential information contained herein. Receipt of permission to use this document does not convey any rights to use the information contained herein without prior written consent of Splashtacular, LLC.

REVISION HISTORY

MARK	DATE		APPROVED
△	mm/dd/yyyy	ISSUED FOR APPROVAL	
△			
△			
△			
△			

The Structural Support System, foundations, decking/treads, fiberglass components including a finite analysis of the ride path depicted on these drawings were designed under the direction of the Professional Engineer who's seal and signature are affixed to this drawing. Any structural design connections of the slide components that are connected to a building are not by Splashtacular.

SPLASHTACULAR®
Waterslides and Waterpark Attractions
401 N.East Street • Paola, Kansas 66071
P 800.844.5334 • F 913.294.2496

TITLE: SUPPORT ARM DETAILS

PROJECT: TRANQUILITY HS		
DATE: 03/26/2025	PROJECT NUMBER: 12125	COUNTRY: USA
SCALE: AS NOTED	DESIGNER: DAR	STATE: CALIFORNIA
CHECKED: RRR	APPROVED: RRR	CITY: TRANQULITY

S5.1

COUNTY OF FRESNO ENVIRONMENTAL HEALTH DIVISION
1221 Fulton Street – 3rd Floor (559) 600-3357
APPROVED
WITH NOTED CORRECTIONS AND
SUBJECT TO FIELD INSPECTIONS
BY: DATE: 8/26/25
APPROVAL OF THIS PLAN DOES NOT CONSTITUTE PERMISSION TO VIOLATE ANY APPLICABLE CITY OR COUNTY ORDINANCE, OR STATE LAW AND SHALL NOT PREVENT THIS DEPARTMENT FROM REQUIRING CORRECTION OF ERRORS OR OMISSIONS IN PLANS, SPECIFICATIONS OR CONSTRUCTION.

AGD
ARCHITECTURE | DESIGN
ANDREW GOODWIN DESIGNS
1238 MONTEREY STREET
SAN LUIS OBISPO, CA 93422
t: (805) 439-1611
www.andrewgoodwin.us

RSM
Design | Engineering
ROGERS STRINGER MCCLELLAND
1981 N. BROADWAY, SUITE 202
WALNUT CREEK, CA 94596
PH. (925) 217-6619
www.rsm-de.com

These drawings are instruments of service and are the property of Andrew Goodwin Designs, Inc. The information represented on these drawings are exclusively for the project indicated and shall not be transferred or otherwise reproduced without express written permission of Andrew Goodwin.
Copyright 2023

SEAL

NOT FOR CONSTRUCTION

PROJECT

TRANQUILLITY HIGH SCHOOL
AQUATIC CENTER MODERNIZATION
6052 Juanche Ave,
Tranquillity, CA 93668

CLIENT

GOLDEN PLAINS UNIFIED SCHOOL DISTRICT

SHEET TITLE

SUPPORT ARM DETAILS

PHASE DESCRIPTION
100% CD FCHD APPROVAL
SWIMMING POOL

DATE: 8/26/2025

TECHNICIAN:

PROJECT MANAGER:

JOB NUMBER: 791

SHEET NUMBER
WS1.11-1

PLOT DATE: 4/24/2025 3:26:20 PM

Copyright © 2025 RSM, Inc.-All Rights Reserved-This document was prepared for use only by the client, only for the purposes stated, and within a reasonable time from issuance. Non-commercial, educational, and scientific use of this document by regulatory agencies is regarded as a "fair use" and not a violation of copyright. Regulatory agencies may make additional copies of this document for internal use. Copies may also be made available to the public as required by law. The reprint must acknowledge the copyright and indicate that permission to reprint has been received.

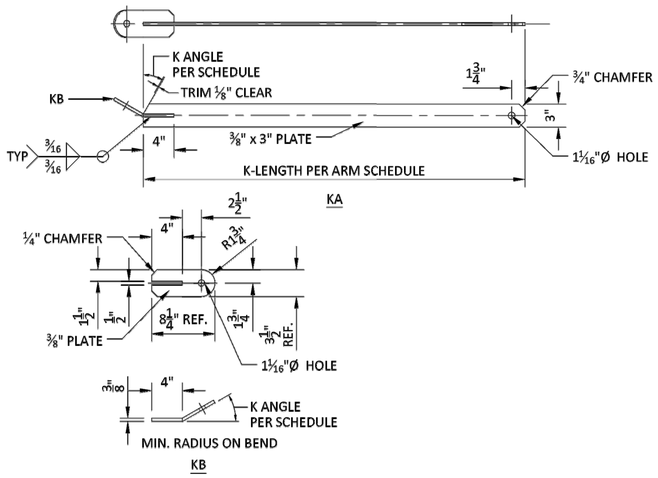

1 / S5.2 ARM-ABOVE KICKER DETAIL
SCALE: 1-1/2" = 1'-0"

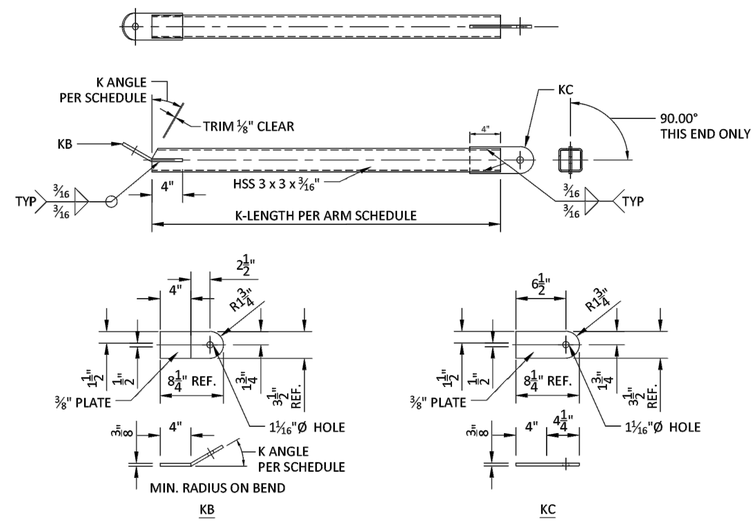

2 / S5.2 ARM-BELOW KICKER DETAIL
SCALE: 1-1/2" = 1'-0"

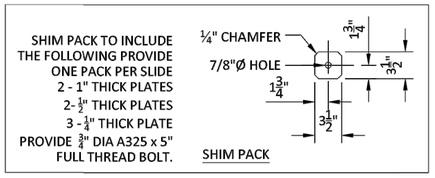

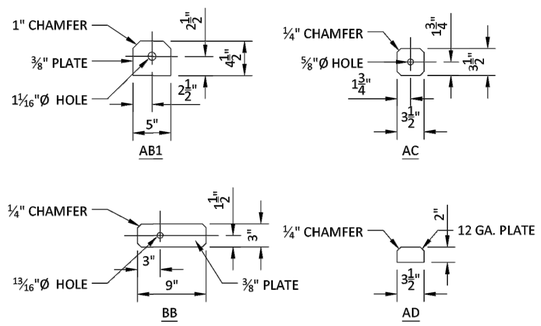

3 / S5.2 ARM TAB CONNECTION DETAILS
SCALE: 1-1/2" = 1'-0"

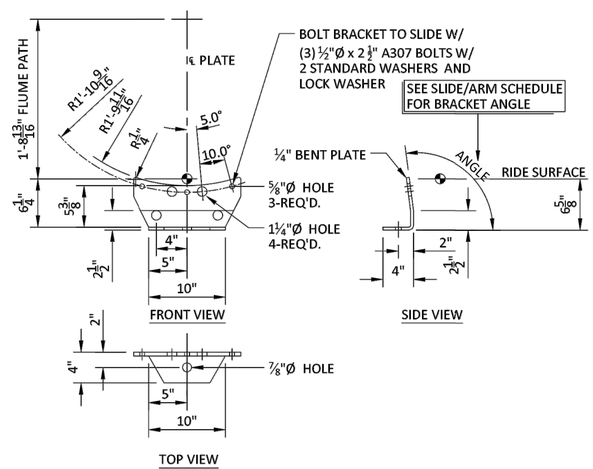

4 / S5.2 SLIDE MOUNTING BRACKET
SCALE: 1-1/2" = 1'-0"

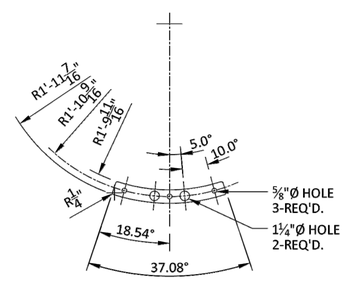

5 / S5.2 SLIDE MOUNTING BACKING PLATE
SCALE: 1-1/2" = 1'-0"

© 2025 - Splashtacular, LLC - All Rights Reserved.

This document is the intellectual property of Splashtacular, LLC, which has exclusive rights to proprietary trade secrets and confidential information contained herein. Receipt of permission to use this document does not convey any rights to use the information contained herein without prior written consent of Splashtacular, LLC.

REVISION HISTORY

MARK	DATE		APPROVED
△	mm/dd/yyyy	ISSUED FOR APPROVAL	
△			
△			
△			
△			

The Structural Support System, foundations, decking/treads, fiberglass components including a finite analysis of the ride path depicted on these drawings were designed under the direction of the Professional Engineer who's seal and signature are affixed to this drawing. Any structural design connections of the slide components that are connected to a building are not by Splashtacular.

SPLASHTACULAR®
Waterslides and Waterpark Attractions
401 N.East Street • Paola, Kansas 66071
P 800.844.5334 • F 913.294.2496

TITLE: SUPPORT ARM DETAILS		
PROJECT: TRANQUILITY HS		
DATE: 03/26/2025	PROJECT NUMBER: 12125	COUNTRY: USA
SCALE: AS NOTED	DESIGNER: DAR	STATE: CALIFORNIA
CHECKED: RRR	APPROVED: RRR	CITY: TRANQUILITY

S5.2

COUNTY OF FRESNO ENVIRONMENTAL HEALTH DIVISION
1221 Fulton Street – 3rd Floor (559) 600-3357
APPROVED
WITH NOTED CORRECTIONS AND
SUBJECT TO FIELD INSPECTIONS
BY: DATE: 8/26/25
APPROVAL OF THIS PLAN DOES NOT CONSTITUTE PERMISSION TO VIOLATE ANY APPLICABLE CITY OR COUNTY ORDINANCE, OR STATE LAW, AND SHALL NOT PREVENT THIS DEPARTMENT FROM REQUIRING CORRECTION OF ERRORS OR OMISSIONS IN PLANS, SPECIFICATIONS OR CONSTRUCTION.

AGD
ARCHITECTURE | DESIGN
ANDREW GOODWIN DESIGNS
1238 MONTEREY STREET
SAN LUIS OBISPO, CA 93422
t: (805) 439-1611
www.andrewgoodwin.us

RSM
Design | Engineering
ROGERS STRINGER MCCLELLAND
1981 N. BROADWAY, SUITE 202
WALNUT CREEK, CA 94596
PH. (925) 217-6619
www.rsm-de.com

These drawings are instruments of service and are the property of Andrew Goodwin Designs, Inc. The information represented on these drawings are exclusively for the project indicated and shall not be transferred or otherwise reproduced without express written permission of Andrew Goodwin.
Copyright 2023

SEAL
NOT FOR CONSTRUCTION
8/26/25

PROJECT
TRANQUILLITY HIGH SCHOOL
AQUATIC CENTER MODERNIZATION
6052 Juanche Ave,
Tranquillity, CA 93668

CLIENT
GOLDEN PLAINS UNIFIED SCHOOL DISTRICT

SHEET TITLE
SUPPORT ARM DETAILS

PHASE DESCRIPTION
100% CD FCHD APPROVAL
SWIMMING POOL

DATE: 8/26/2025
TECHNICIAN:
PROJECT MANAGER:
JOB NUMBER: 791
SHEET NUMBER
WS1.12-1

PLOT DATE: 4/24/2025 3:26:20 PM

Copyright © 2025 RSM, Inc.-All Rights Reserved-This document was prepared for use only by the client, only for the purposes stated, and within a reasonable time from issuance. Non-commercial, educational, and scientific use of this document by regulatory agencies is regarded as a "fair use" and not a violation of copyright. Regulatory agencies may make additional copies of this document for internal use. Copies may also be made available to the public as required by law. The reprint must acknowledge the copyright and indicate that permission to reprint has been received.

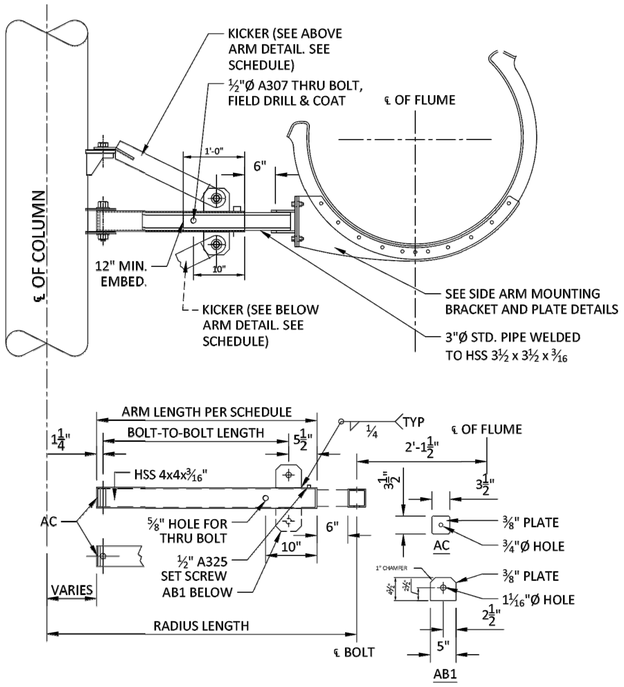

1/2 S5.3 SIDE ARM - KICKER ABOVE/BELOW
SCALE: 1" = 1'-0"

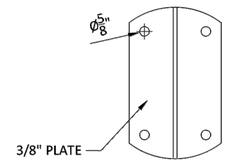

NOTE:
FIELD-BOLT MOUNTING PLATE TO BRACKET W/ (4)-½"Ø x 2½" A325 BOLTS. PROVIDE 5/16" PLATE WASHER OVER SLOTS.

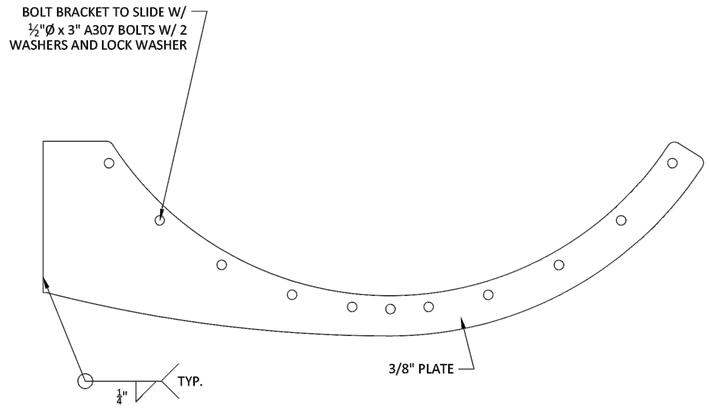

3 S5.3 SIDE ARM MOUNTING BRACKET
SCALE: 3" = 1'-0"

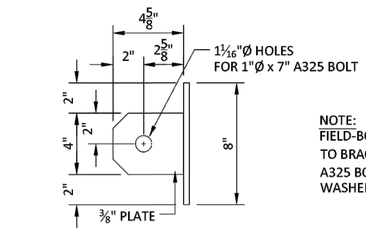

NOTE:
FIELD-BOLT MOUNTING PLATE TO BRACKET W/ (4)-½"Ø x 2½" A325 BOLTS. PROVIDE 5/16" PLATE WASHER OVER SLOTS.

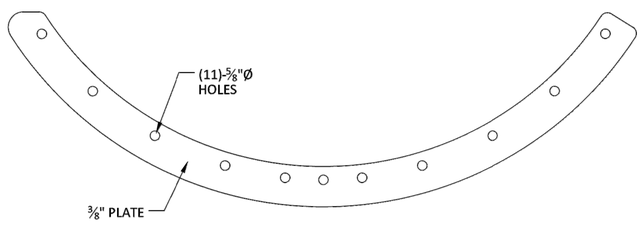

4 S5.3 SIDE ARM BACKING PLATE
SCALE: 3" = 1'-0"

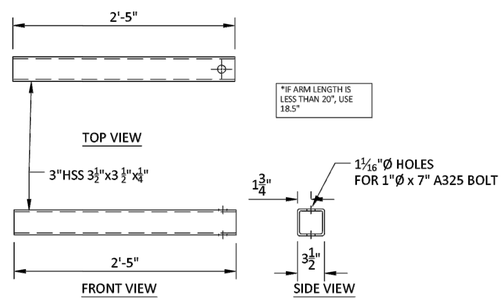

5 S5.3 SIDE ARM PIPE CONNECTION DETAILS
SCALE: 1-1/2" = 1'-0"

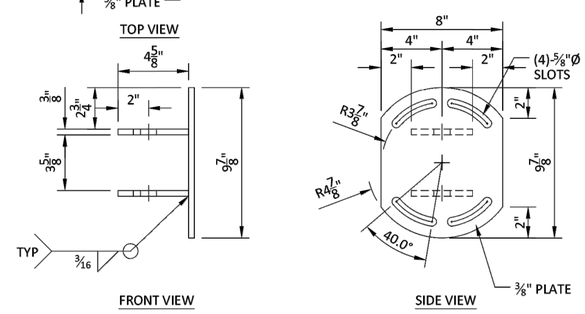

NOTE:
FIELD-BOLT MOUNTING PLATE TO BRACKET W/ (4)-½"Ø x 2½" A325 BOLTS. PROVIDE 5/16" PLATE WASHER OVER SLOTS.

6 S5.3 SIDE ARM PIPE CONNECTION PLATE
SCALE: 3" = 1'-0"

© 2025 - Splashtacular, LLC - All Rights Reserved.

This document is the intellectual property of Splashtacular, LLC, which has exclusive rights to proprietary trade secrets and confidential information contained herein. Receipt of permission to use this document does not convey any rights to use the information contained herein without prior written consent of Splashtacular, LLC.

REVISION HISTORY

MARK	DATE		APPROVED
△	mm/dd/yyyy	ISSUED FOR APPROVAL	
△			
△			
△			
△			

The Structural Support System, foundations, decking/treads, fiberglass components including a finite analysis of the ride path depicted on these drawings were designed under the direction of the Professional Engineer who's seal and signature are affixed to this drawing. Any structural design connections of the slide components that are connected to a building are not by Splashtacular.

SPLASHTACULAR®
Waterslides and Waterpark Attractions
401 N.East Street • Paola, Kansas 66071
P 800.844.5334 • F 913.294.2496

TITLE: SUPPORT ARM DETAILS		
PROJECT: TRANQUILITY HS		
DATE: 03/26/2025	PROJECT NUMBER: 12125	COUNTRY: USA
SCALE: AS NOTED	DESIGNER: DAR	STATE: CALIFORNIA
CHECKED: RRR	APPROVED: RRR	CITY: TRANQULITY

S5.3

COUNTY OF FRESNO ENVIRONMENTAL HEALTH DIVISION
1221 Fulton Street – 3rd Floor (559) 600-3357
APPROVED WITH NOTED CORRECTIONS AND SUBJECT TO FIELD INSPECTIONS
BY: DATE: 8/26/25
APPROVAL OF THIS PLAN DOES NOT CONSTITUTE PERMISSION TO VIOLATE ANY APPLICABLE CITY OR COUNTY ORDINANCE, OR STATE LAW, AND SHALL NOT PREVENT THIS DEPARTMENT FROM REQUIRING CORRECTION OF ERRORS OR OMISSIONS IN PLANS, SPECIFICATIONS OR CONSTRUCTION.

AGD
ARCHITECTURE | DESIGN
ANDREW GOODWIN DESIGNS
1238 MONTEREY STREET
SAN LUIS OBISPO, CA 93422
t: (805) 439-1611
www.andrewgoodwin.us

RSM
Design | Engineering
ROGERS STRINGER MCCLELLAND
1981 N. BROADWAY, SUITE 202
WALNUT CREEK, CA 94596
PH. (925) 217-6619
www.rsm-de.com

These drawings are instruments of service and are the property of Andrew Goodwin Designs, Inc. The information represented on these drawings are exclusively for the project indicated and shall not be transferred or otherwise reproduced without express written permission of Andrew Goodwin.
Copyright 2023

SEAL
NOT FOR CONSTRUCTION

PROJECT
TRANQUILLITY HIGH SCHOOL
AQUATIC CENTER MODERNIZATION
6052 Juanche Ave,
Tranquillity, CA 93668

CLIENT
GOLDEN PLAINS UNIFIED SCHOOL DISTRICT

SHEET TITLE
SUPPORT ARM DETAILS

PHASE DESCRIPTION
100% CD FCHD APPROVAL
SWIMMING POOL

DATE: 8/26/2025
TECHNICIAN:
PROJECT MANAGER:
JOB NUMBER: 791

SHEET NUMBER
WS1.13-1

PLOT DATE: 4/24/2025 3:26:20 PM

Copyright © 2025 RSM, Inc.-All Rights Reserved-This document was prepared for use only by the client, only for the purposes stated, and within a reasonable time from issuance. Non-commercial, educational, and scientific use of this document by regulatory agencies is regarded as a "fair use" and not a violation of copyright. Regulatory agencies may make additional copies of this document for internal use. Copies may also be made available to the public as required by law. The reprint must acknowledge the copyright and indicate that permission to reprint has been received.

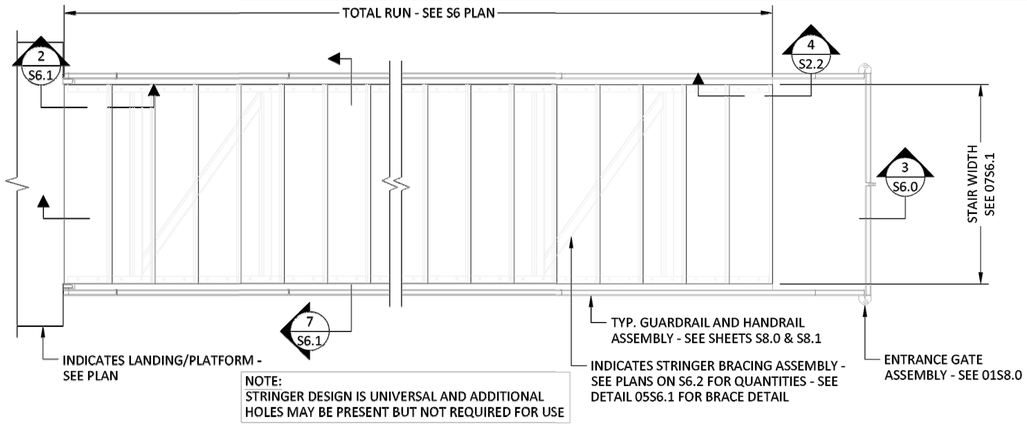

1 S6.0 DECK TO LANDING STAIR PLAN
SCALE: 3/4" = 1'-0"

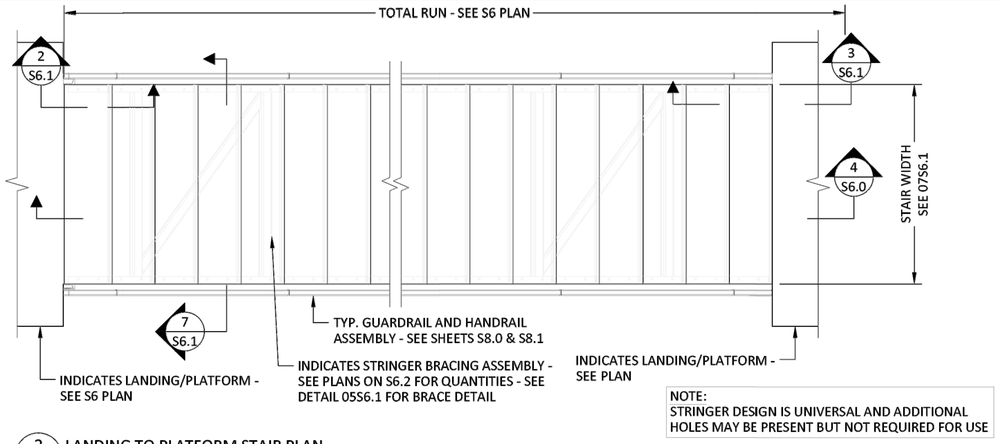

2 S6.0 LANDING TO PLATFORM STAIR PLAN
SCALE: 3/4" = 1'-0"

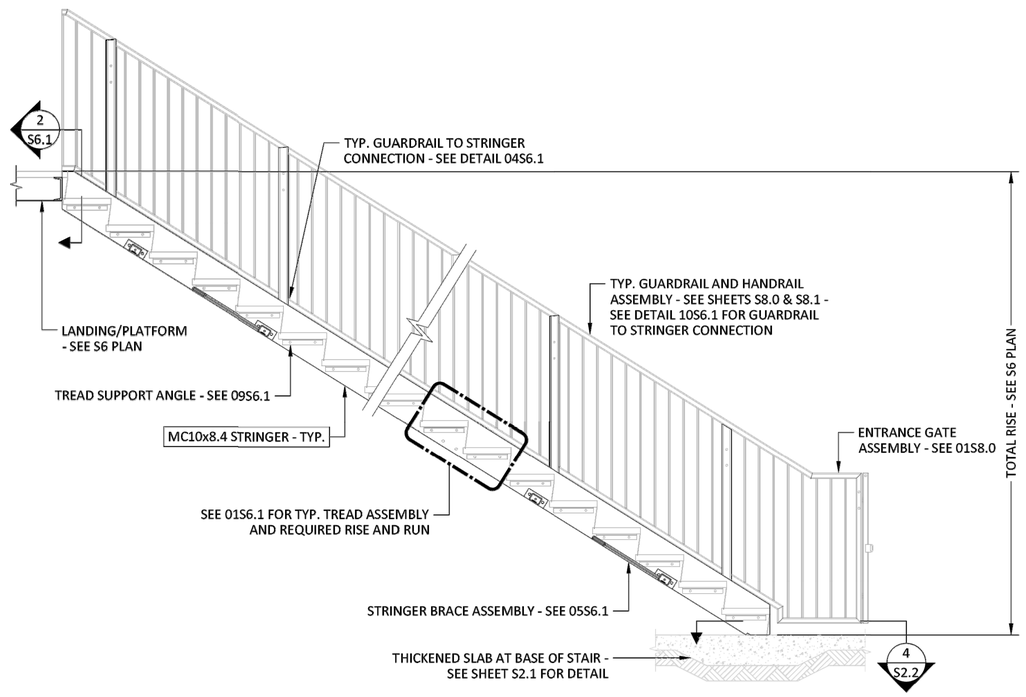

3 S6.0 DECK TO LANDING STAIR SECTION
SCALE: 3/4" = 1'-0"

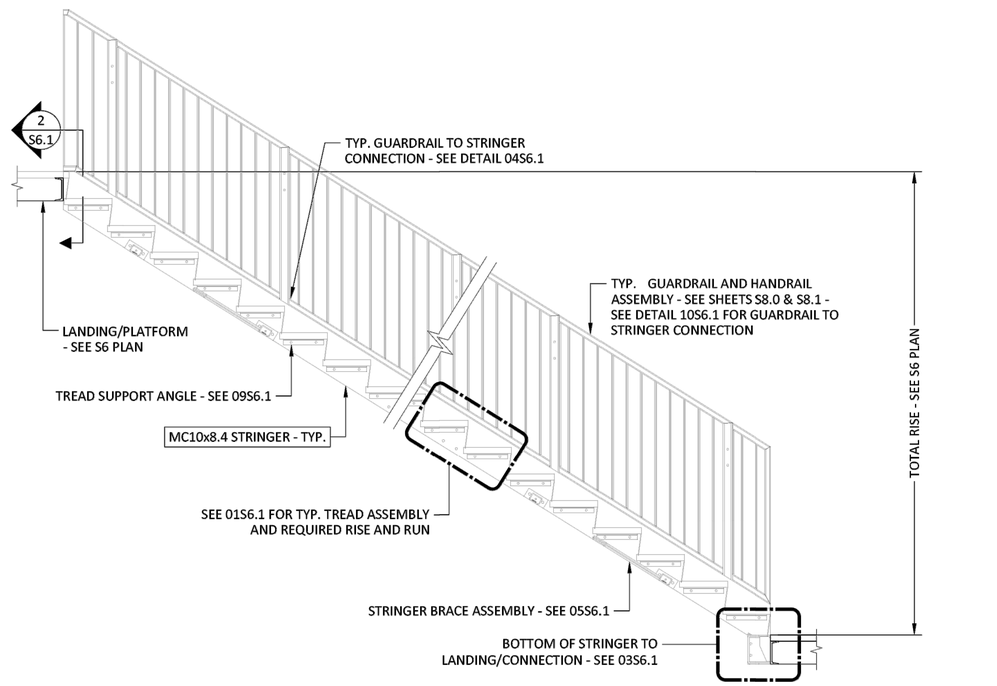

4 S6.0 LANDING TO PLATFORM STAIR SECTION
SCALE: 3/4" = 1'-0"

© 2025 - Splashtacular, LLC - All Rights Reserved.

This document is the intellectual property of Splashtacular, LLC, which has exclusive rights to proprietary trade secrets and confidential information contained herein. Receipt of permission to use this document does not convey any rights to use the information contained herein without prior written consent of Splashtacular, LLC.

REVISION HISTORY

MARK	DATE		APPROVED
△	mm/dd/yyyy	ISSUED FOR APPROVAL	
△			
△			
△			
△			

The Structural Support System, foundations, decking/treads, fiberglass components including a finite analysis of the ride path depicted on these drawings were designed under the direction of the Professional Engineer who's seal and signature are affixed to this drawing. Any structural design connections of the slide components that are connected to a building are not by Splashtacular.

SPLASHTACULAR®
Waterslides and Waterpark Attractions
401 N.East Street • Paola, Kansas 66071
P 800.844.5334 • F 913.294.2496

TITLE: TYPICAL STAIR PLANS AND ELEVATIONS		
PROJECT: TRANQUILITY HS		
DATE: 03/26/2025	PROJECT NUMBER: 12125	COUNTRY: USA
SCALE: AS NOTED	DESIGNER: DAR	STATE: CALIFORNIA
CHECKED: RRR	APPROVED: RRR	CITY: TRANQUILITY

S6.0

COUNTY OF FRESNO ENVIRONMENTAL HEALTH DIVISION
1221 Fulton Street – 3rd Floor (559) 600-3357
APPROVED WITH NOTED CORRECTIONS AND SUBJECT TO FIELD INSPECTIONS
BY: DATE: 8/16/25
APPROVAL OF THIS PLAN DOES NOT CONSTITUTE PERMISSION TO VIOLATE ANY APPLICABLE CITY OR COUNTY ORDINANCE, OR STATE LAW, AND SHALL NOT PREVENT THIS DEPARTMENT FROM REQUIRING CORRECTION OF ERRORS OR OMISSIONS IN PLANS, SPECIFICATIONS OR CONSTRUCTION.

AGD
ARCHITECTURE | DESIGN
ANDREW GOODWIN DESIGNS
1238 MONTEREY STREET
SAN LUIS OBISPO, CA 93422
t: (805) 439-1611
www.andrewgoodwin.us

RSM
Design | Engineering
ROGERS STRINGER MCCLELLAND
1981 N. BROADWAY, SUITE 202
WALNUT CREEK, CA 94596
PH. (925) 217-6619
www.rsm-de.com

These drawings are instruments of service and are the property of Andrew Goodwin Designs, Inc. The information represented on these drawings are exclusively for the project indicated and shall not be transferred or otherwise reproduced without express written permission of Andrew Goodwin.
Copyright 2023

SEAL
REGISTERED PROFESSIONAL ENGINEER SAN MANUEL STATE OF CALIFORNIA
NOT FOR CONSTRUCTION
8/26/25

PROJECT
TRANQUILLITY HIGH SCHOOL
AQUATIC CENTER MODERNIZATION
6052 Juanche Ave,
Tranquillity, CA 93668

CLIENT
GOLDEN PLAINS UNIFIED SCHOOL DISTRICT

SHEET TITLE
TYPICAL STAIR PLANS AND ELEVATIONS

PHASE DESCRIPTION
100% CD FCHD APPROVAL
SWIMMING POOL

DATE: 8/26/2025
TECHNICIAN:
PROJECT MANAGER:
JOB NUMBER: 791
SHEET NUMBER
WS1.14-1

PLOT DATE: 4/24/2025 3:26:20 PM

Copyright © 2025 RSM, Inc.-All Rights Reserved-This document was prepared for use only by the client, only for the purposes stated, and within a reasonable time from issuance. Non-commercial, educational, and scientific use of this document by regulatory agencies is regarded as a "fair use" and not a violation of copyright. Regulatory agencies may make additional copies of this document for internal use. Copies may also be made available to the public as required by law. The reprint must acknowledge the copyright and indicate that permission to reprint has been received.

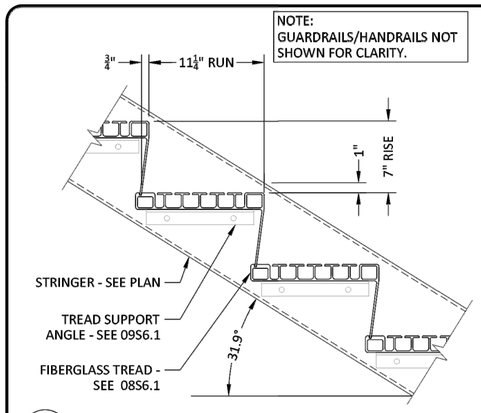

1 S6.1 TYPICAL STAIR TREAD ASSEMBLY DETAIL
SCALE: 2" = 1'-0"

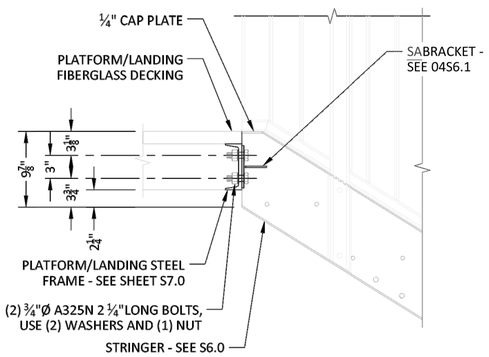

2 S6.1 STRINGER TO LANDING/PLATFORM TOP CONNNECTION
SCALE: 1-1/2" = 1'-0"

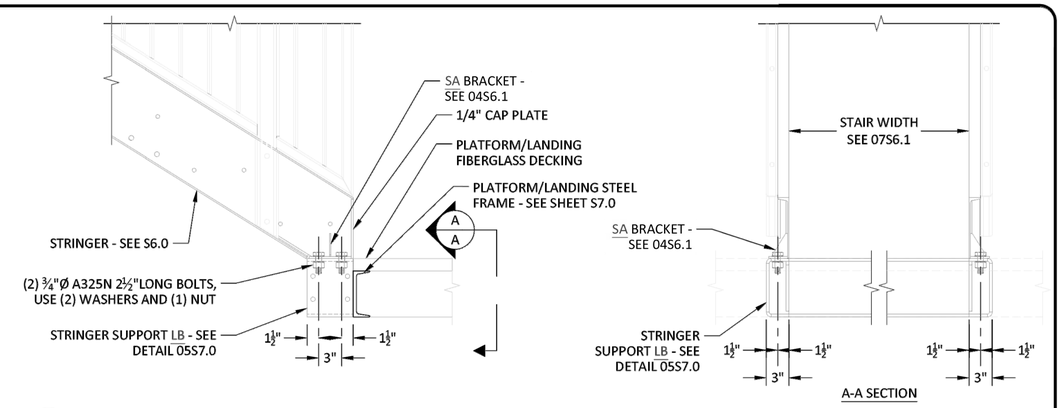

3 S6.1 STRINGER TO LANDING/PLATFORM BOTTOM CONNNECTION
SCALE: 1-1/2" = 1'-0"

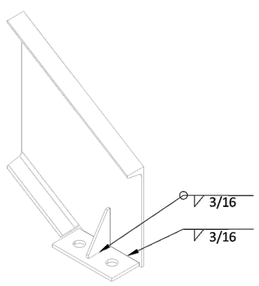

ISO VIEW AND TYPICAL WELDMENT

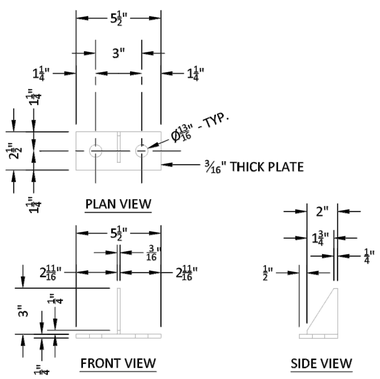

4 S6.1 "SA" STRINGER CONNECTION BRACKET
SCALE: 3" = 1'-0"

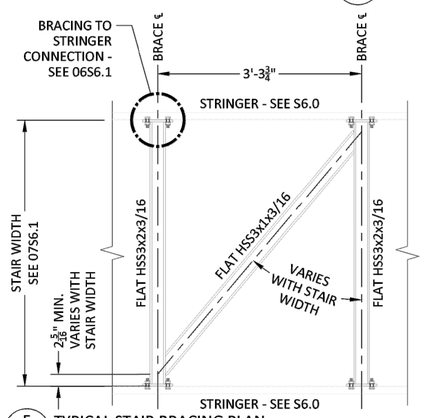

5 S6.1 TYPICAL STAIR BRACING PLAN
SCALE: 1" = 1'-0"

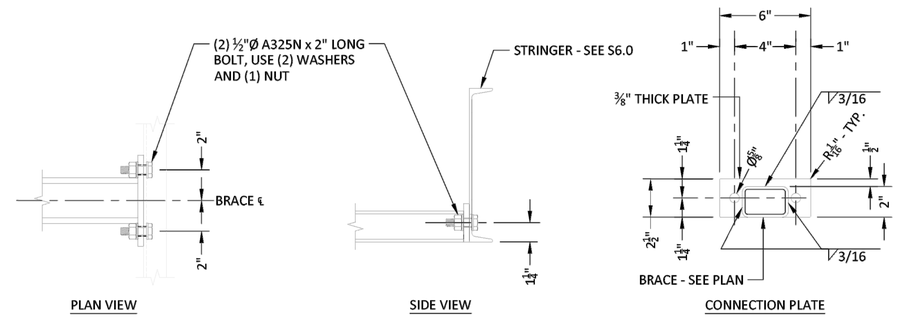

6 S6.1 BRACING TO STRINGER CONNECTION DETAIL
SCALE: 3" = 1'-0"

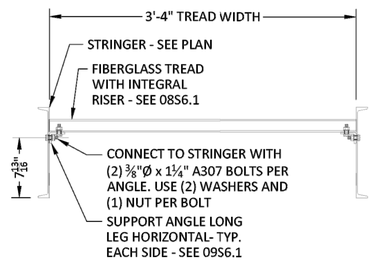

7 S6.1 TYPICAL STAIR WIDTH SECTION
SCALE: 1 1/2" = 1'-0"

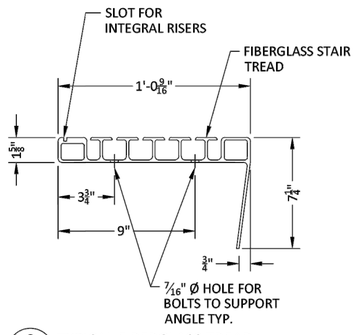

8 S6.1 TYPICAL FIBERGLASS TREAD
SCALE: 3" = 1'-0"

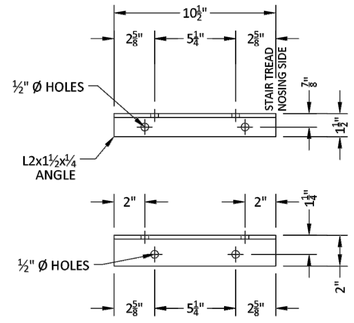

9 S6.1 TYPICAL TREAD SUPPORT ANGLE
SCALE: 3" = 1'-0"

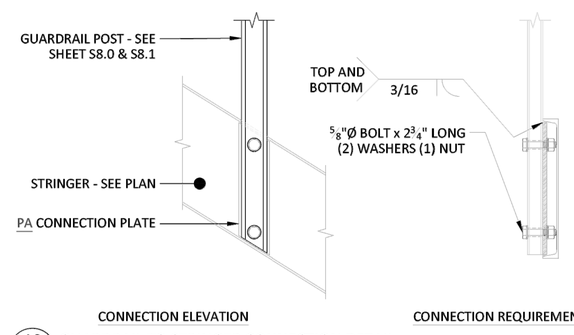

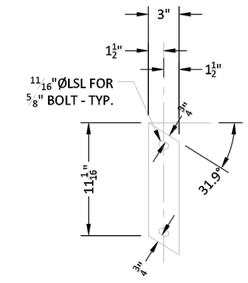

PA CONNECTION PLATE

10 S6.1 GUARDRAIL TO STRINGER CONNECTION DETAIL
SCALE: 3" = 1'-0"

© 2025 - Splashtacular, LLC - All Rights Reserved.

This document is the intellectual property of Splashtacular, LLC, which has exclusive rights to proprietary trade secrets and confidential information contained herein. Receipt of permission to use this document does not convey any rights to use the information contained herein without prior written consent of Splashtacular, LLC.

REVISION HISTORY

MARK	DATE		APPROVED
△	mm/dd/yyyy	ISSUED FOR APPROVAL	
△			
△			
△			
△			

The Structural Support System, foundations, decking/treads, fiberglass components including a finite analysis of the ride path depicted on these drawings were designed under the direction of the Professional Engineer who's seal and signature are affixed to this drawing. Any structural design connections of the slide components that are connected to a building are not by Splashtacular.

SPLASHTACULAR®
Waterslides and Waterpark Attractions
401 N.East Street • Paola, Kansas 66071
P 800.844.5334 • F 913.294.2496

TITLE: TYPICAL STAIR SECTIONS AND DETAILS

PROJECT:	TRANQUILITY HS				
DATE:	03/26/2025	PROJECT NUMBER:	12125	COUNTRY:	USA
SCALE:	AS NOTED	DESIGNER:	DAR	STATE:	CALIFORNIA
CHECKED:	RRR	APPROVED:	RRR	CITY:	TRANQULITY

S6.1

COUNTY OF FRESNO ENVIRONMENTAL HEALTH DIVISION
1221 Fulton Street – 3rd Floor (559) 600-3357
APPROVED WITH NOTED CORRECTIONS AND SUBJECT TO FIELD INSPECTIONS
DATE: 8/26/25
BY:
APPROVAL OF THIS PLAN DOES NOT CONSTITUTE PERMISSION TO VIOLATE ANY APPLICABLE CITY OR COUNTY ORDINANCE, OR STATE LAW, AND SHALL NOT PREVENT THIS DEPARTMENT FROM REQUIRING CORRECTION OF ERRORS OR OMISSIONS IN PLANS, SPECIFICATIONS OR CONSTRUCTION.

AGD
ARCHITECTURE | DESIGN
ANDREW GOODWIN DESIGNS
1238 MONTEREY STREET
SAN LUIS OBISPO, CA 93422
t: (805) 439-1611
www.andrewgoodwin.us

RSM
Design | Engineering
ROGERS STRINGER MCCLELLAND
1981 N. BROADWAY, SUITE 202
WALNUT CREEK, CA 94596
PH. (925) 217-6619
www.rsm-de.com

These drawings are instruments of service and are the property of Andrew Goodwin Designs, Inc. The information represented on these drawings are exclusively for the project indicated and shall not be transferred or otherwise reproduced without express written permission of Andrew Goodwin.
Copyright 2023

SEAL
NOT FOR CONSTRUCTION

PROJECT
TRANQUILLITY HIGH SCHOOL
AQUATIC CENTER MODERNIZATION
6052 Juanche Ave,
Tranquillity, CA 93668

CLIENT
GOLDEN PLAINS UNIFIED SCHOOL DISTRICT

SHEET TITLE
TYPICAL STAIR SECTIONS AND DETAILS

PHASE DESCRIPTION
100% CD FCHD APPROVAL
SWIMMING POOL

DATE: 8/26/2025
TECHNICIAN:
PROJECT MANAGER:
JOB NUMBER: 791

SHEET NUMBER
WS1.15-1

PLOT DATE: 4/24/2026 3:26:20 PM

Copyright © 2025 RSM, Inc.-All Rights Reserved-This document was prepared for use only by the client, only for the purposes stated, and within a reasonable time from issuance. Non-commercial, educational, and scientific use of this document by regulatory agencies is regarded as a "fair use" and not a violation of copyright. Regulatory agencies may make additional copies of this document for internal use. Copies may also be made available to the public as required by law. The reprint must acknowledge the copyright and indicate that permission to reprint has been received.

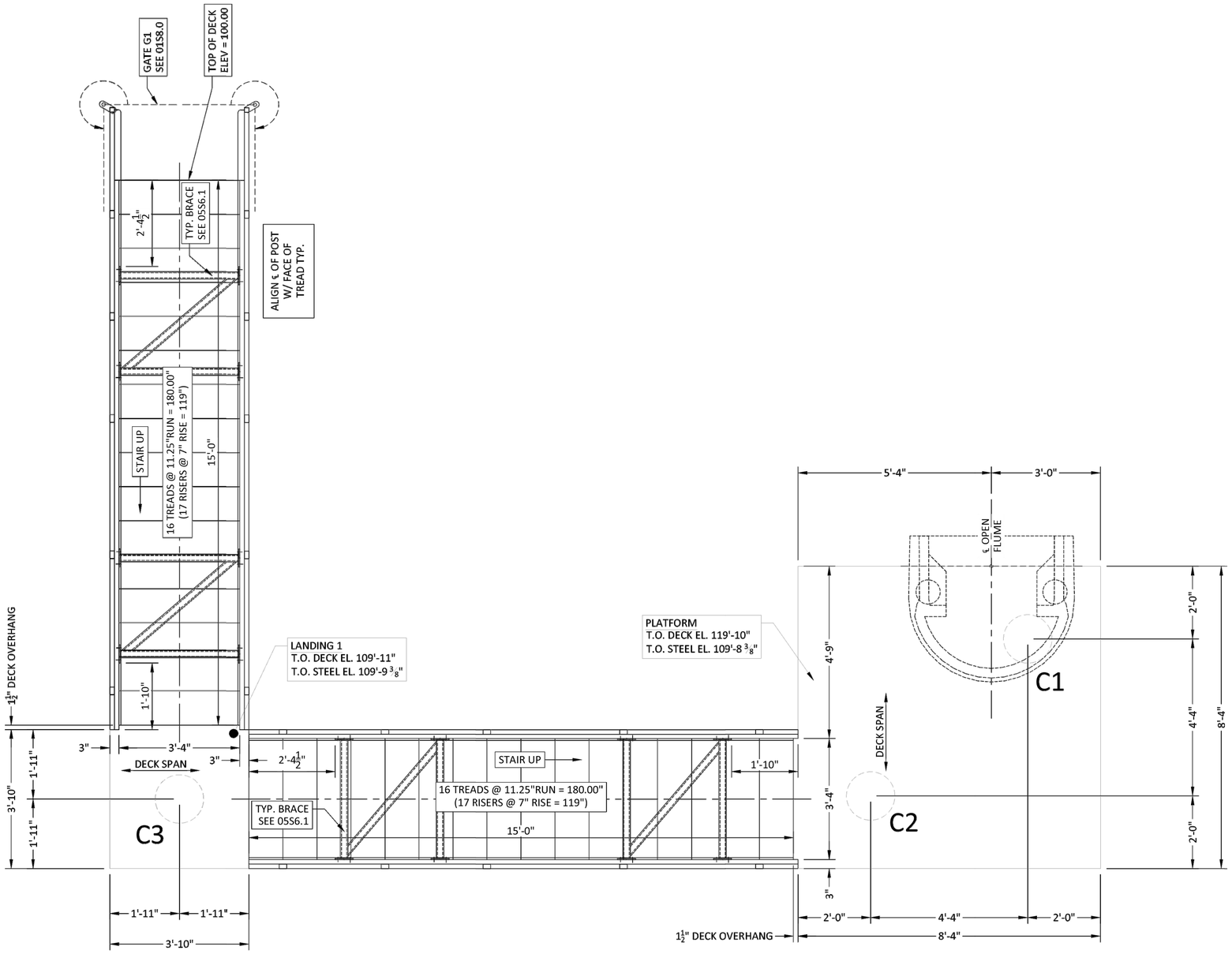

1 STAIR PLAN
S6.2 SCALE: 3/4" = 1'-0"

© 2025 - Splashtacular, LLC - All Rights Reserved.

This document is the intellectual property of Splashtacular, LLC, which has exclusive rights to proprietary trade secrets and confidential information contained herein. Receipt of permission to use this document does not convey any rights to use the information contained herein without prior written consent of Splashtacular, LLC.

REVISION HISTORY

MARK	DATE		APPROVED
△	mm/dd/yyyy	ISSUED FOR APPROVAL	
△			
△			
△			
△			

The Structural Support System, foundations, decking/treads, fiberglass components including a finite analysis of the ride path depicted on these drawings were designed under the direction of the Professional Engineer who's seal and signature are affixed to this drawing. Any structural design connections of the slide components that are connected to a building are not by Splashtacular.

SPLASHTACULAR®
Waterslides and Waterpark Attractions
401 N.East Street • Paola, Kansas 66071
P 800.844.5334 • F 913.294.2496

TITLE: STAIR PLAN		
PROJECT: TRANQUILITY HS		
DATE: 03/26/2025	PROJECT NUMBER: 12125	COUNTRY: USA
SCALE: AS NOTED	DESIGNER: DAR	STATE: CALIFORNIA
CHECKED: RRR	APPROVED: RRR	CITY: TRANQULITY

S6.2

COUNTY OF FRESNO ENVIRONMENTAL HEALTH DIVISION
1221 Fulton Street – 3rd Floor (559) 600-3357
APPROVED
WITH NOTED CORRECTIONS AND
SUBJECT TO FIELD INSPECTIONS
BY: DATE: 8/26/25
APPROVAL OF THIS PLAN DOES NOT CONSTITUTE PERMISSION TO VIOLATE ANY APPLICABLE CITY OR COUNTY ORDINANCE, OR STATE LAW, AND SHALL NOT PREVENT THIS DEPARTMENT FROM REQUIRING CORRECTION OF ERRORS OR OMISSIONS IN PLANS, SPECIFICATIONS OR CONSTRUCTION.

AGD
ARCHITECTURE | DESIGN
ANDREW GOODWIN DESIGNS
1238 MONTEREY STREET
SAN LUIS OBISPO, CA 93422
t: (805) 439-1611
www.andrewgoodwin.us

RSM
Design | Engineering
ROGERS STRINGER MCCLELLAND
1981 N. BROADWAY, SUITE 202
WALNUT CREEK, CA 94596
PH. (925) 217-6619
www.rsm-de.com

These drawings are instruments of service and are the property of Andrew Goodwin Designs, Inc. The information represented on these drawings are exclusively for the project indicated and shall not be transferred or otherwise reproduced without express written permission of Andrew Goodwin.
Copyright 2023

SEAL
NOT FOR CONSTRUCTION

PROJECT
TRANQUILLITY HIGH SCHOOL
AQUATIC CENTER MODERNIZATION
6052 Juanche Ave,
Tranquillity, CA 93668

CLIENT
GOLDEN PLAINS UNIFIED SCHOOL DISTRICT

SHEET TITLE
STAIR PLAN

PHASE DESCRIPTION
100% CD FCHD APPROVAL
SWIMMING POOL

DATE: 8/26/2025
TECHNICIAN:
PROJECT MANAGER:
JOB NUMBER: 791

SHEET NUMBER
WS1.16-1

PLOT DATE: 4/24/2025 3:26:20 PM

Copyright © 2025 RSM, Inc.-All Rights Reserved-This document was prepared for use only by the client, only for the purposes stated, and within a reasonable time from issuance. Non-commercial, educational, and scientific use of this document by regulatory agencies is regarded as a "fair use" and not a violation of copyright. Regulatory agencies may make additional copies of this document for internal use. Copies may also be made available to the public as required by law. The reprint must acknowledge the copyright and indicate that permission to reprint has been received.

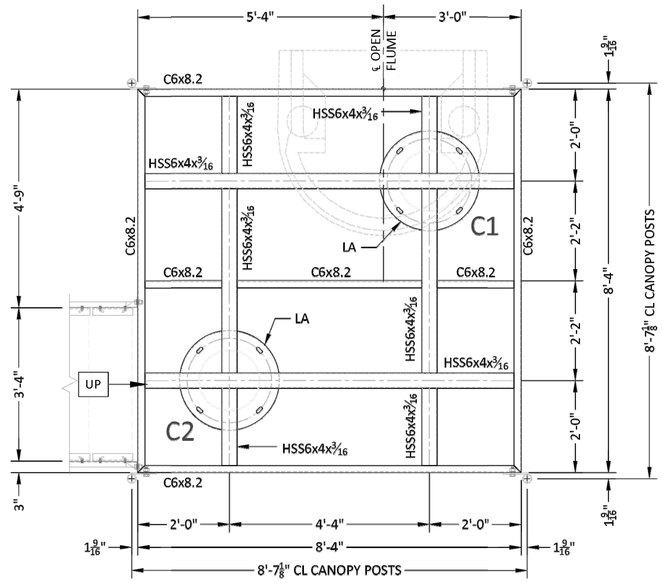

1 TOWER FRAMING PLAN
S7.0 SCALE: 3/4" = 1'-0"

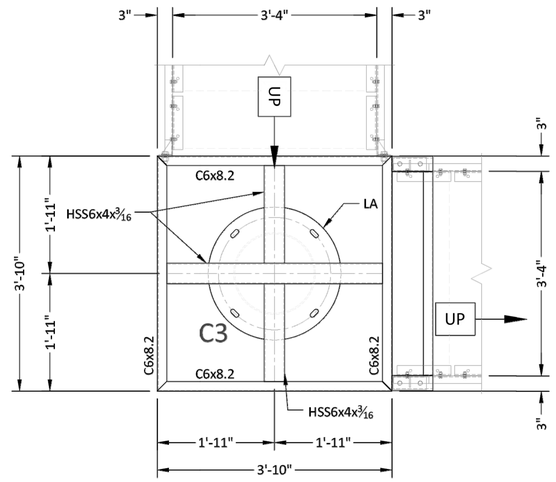

2 LANDING FRAMING PLAN
S7.0 SCALE: 1/2" = 1'-0"

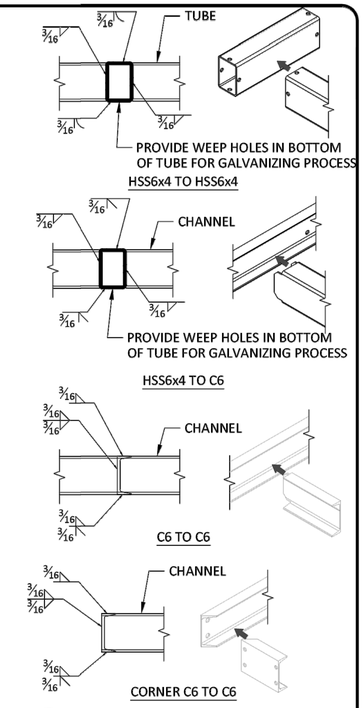

3 TYPICAL FRAMING WELDMENTS
S7.0 SCALE: 1/2" = 1'-0"

NOTES:
1. CONNECTION, WELD & TYPICAL DETAILS SHOWN ON THIS PLAN APPLY TO ALL LANDINGS & PLATFORMS.
2. FOR GUARDRAIL BOLT HOLES, SEE DETAILS SHEET S8 AND PLANS ON S6.
3. SEE SHEET S4 FOR COLUMNS.

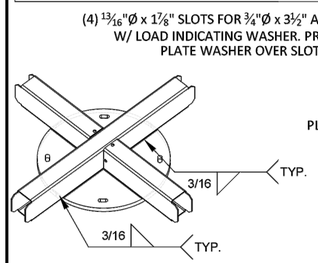

4 "LA" COLUMN CONNECTION PLATE DETAIL
S7.0 SCALE: 1/2" = 1'-0"

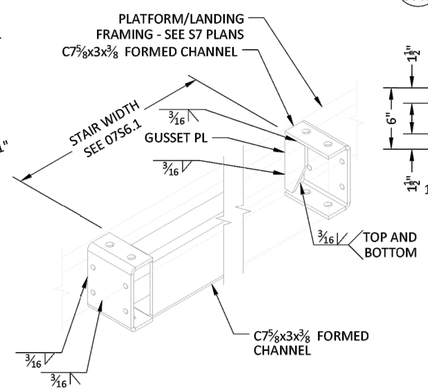

5 "LB" STRINGER SUPPORT FRAME
S7.0 SCALE: 2" = 1'-0"

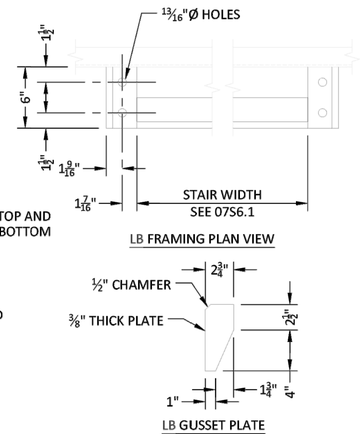

NOTE: REFER TO THE CONTRACT FOR THE INCLUSION OR EXCLUSION OF THE SLIDE CANOPY. ALL EXTERIOR SLIDE TOWERS WILL HAVE THE HOLES DRILLED FOR CANOPY BRACKETS.

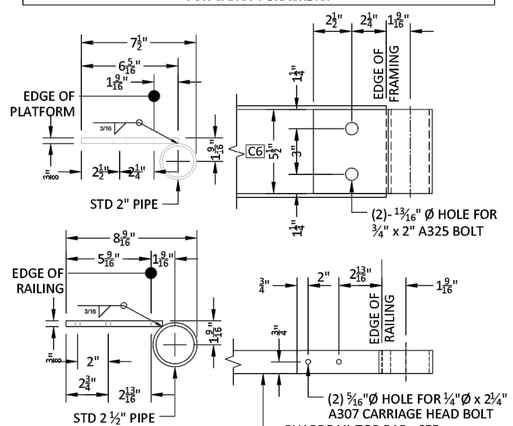

6 CANOPY BRACKET DETAIL
S7.0 SCALE: 3" = 1'-0"

© 2025 - Splashtacular, LLC - All Rights Reserved.

This document is the intellectual property of Splashtacular, LLC, which has exclusive rights to proprietary trade secrets and confidential information contained herein. Receipt of permission to use this document does not convey any rights to use the information contained herein without prior written consent of Splashtacular, LLC.

REVISION HISTORY

MARK	DATE		APPROVED
△	mm/dd/yyyy	ISSUED FOR APPROVAL	
△			
△			
△			
△			

The Structural Support System, foundations, decking/treads, fiberglass components including a finite analysis of the ride path depicted on these drawings were designed under the direction of the Professional Engineer who's seal and signature are affixed to this drawing. Any structural design connections of the slide components that are connected to a building are not by Splashtacular.

SPLASHTACULAR®
Waterslides and Waterpark Attractions
401 N.East Street • Paola, Kansas 66071
P 800.844.5334 • F 913.294.2496

TITLE: TOWER FRAMING & DETAILS
PROJECT: TRANQUILITY HS

DATE: 03/26/2025	PROJECT NUMBER: 12125	COUNTRY: USA
SCALE: AS NOTED	DESIGNER: DAR	STATE: CALIFORNIA
CHECKED: RRR	APPROVED: RRR	CITY: TRANQULITY

S7.0

COUNTY OF FRESNO ENVIRONMENTAL HEALTH DIVISION
1221 Fulton Street – 3rd Floor (559) 600-3357
APPROVED WITH NOTED CORRECTIONS AND SUBJECT TO FIELD INSPECTIONS
BY: DATE: 8/26/25
APPROVAL OF THIS PLAN DOES NOT CONSTITUTE PERMISSION TO VIOLATE ANY APPLICABLE CITY OR COUNTY ORDINANCE, OR STATE LAW, AND SHALL NOT PREVENT THIS DEPARTMENT FROM REQUIRING CORRECTION OF ERRORS OR OMISSIONS IN PLANS, SPECIFICATIONS OR CONSTRUCTION

AGD ARCHITECTURE | DESIGN
ANDREW GOODWIN DESIGNS
1238 MONTEREY STREET
SAN LUIS OBISPO, CA 93422
t: (805) 439-1611
www.andrewgoodwin.us

RSM Design | Engineering
ROGERS STRINGER MCCLELLAND
1981 N. BROADWAY, SUITE 202
WALNUT CREEK, CA 94596
PH. (925) 217-6619
www.rsm-de.com

These drawings are instruments of service and are the property of Andrew Goodwin Designs, Inc. The information represented on these drawings are exclusively for the project indicated and shall not be transferred or otherwise reproduced without express written permission of Andrew Goodwin.
Copyright 2023

SEAL
NOT FOR CONSTRUCTION
8/26/25

PROJECT
TRANQUILLITY HIGH SCHOOL
AQUATIC CENTER MODERNIZATION
6052 Juanche Ave,
Tranquillity, CA 93668

CLIENT
GOLDEN PLAINS UNIFIED SCHOOL DISTRICT

SHEET TITLE
TOWER FRAMING & DETAILS

PHASE DESCRIPTION
100% CD FCHD APPROVAL
SWIMMING POOL

DATE: 8/26/2025
TECHNICIAN:
PROJECT MANAGER:
JOB NUMBER: 791
SHEET NUMBER
WS1.17-1

PLOT DATE: 4/24/2025 3:26:20 PM

Copyright © 2025 RSM, Inc.-All Rights Reserved-This document was prepared for use only by the client, only for the purposes stated, and within a reasonable time from issuance. Non-commercial, educational, and scientific use of this document by regulatory agencies is regarded as a "fair use" and not a violation of copyright. Regulatory agencies may make additional copies of this document for internal use. Copies may also be made available to the public as required by law. The reprint must acknowledge the copyright and indicate that permission to reprint has been received.

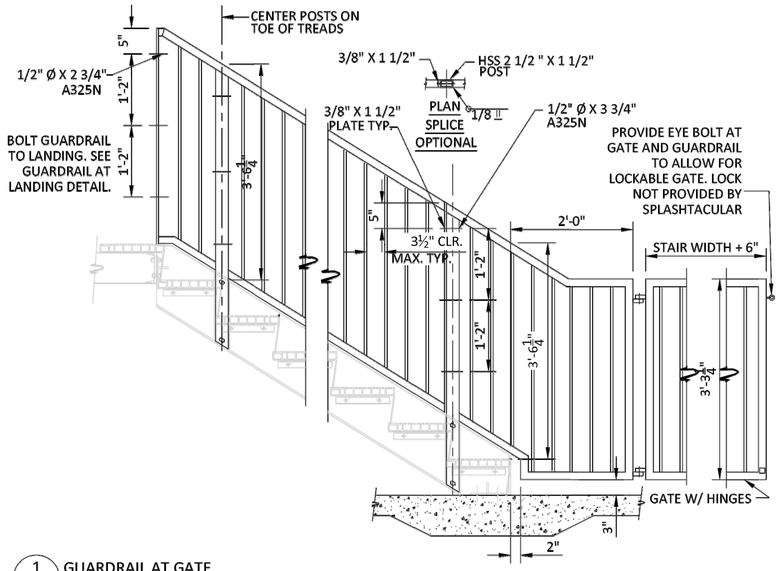

1 S8.0 GUARDRAIL AT GATE
SCALE: 1" = 1'-0"

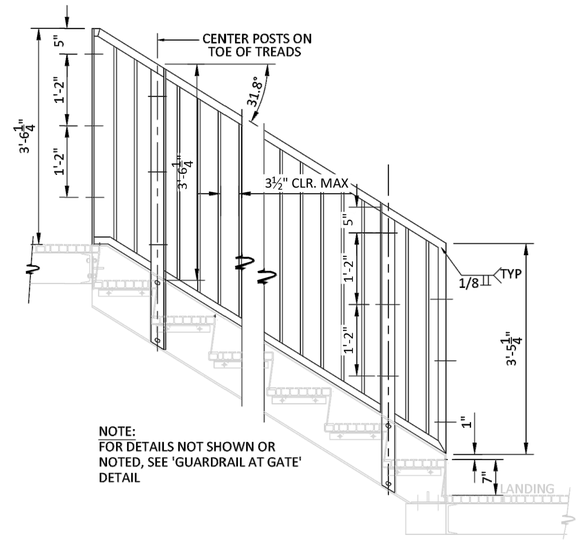

2 S8.0 GUARDRAIL AT STAIRS
SCALE: 1" = 1'-0"

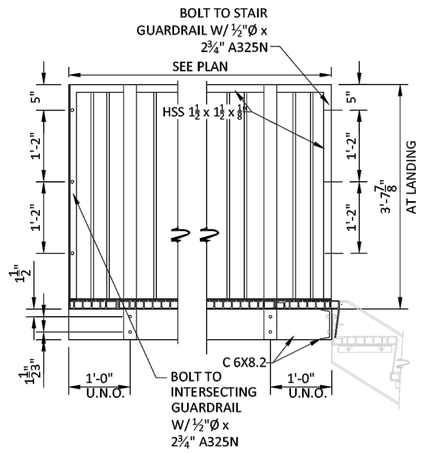

3 S8.0 LANDING GUARDRAIL
SCALE: 1" = 1'-0"

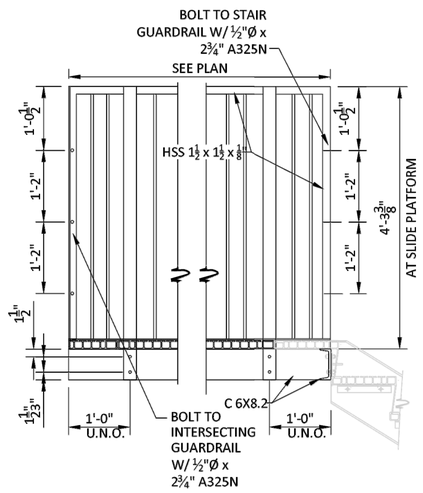

4 S8.0 PLATFORM GUARDRAIL
SCALE: 1" = 1'-0"

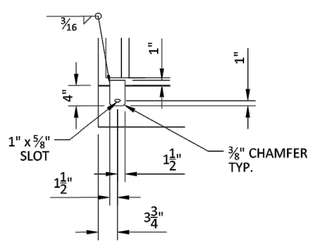

5 S8.0 RAILING TAB DETAIL
SCALE: 1" = 1'-0"

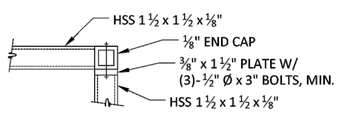

6 S8.0 PLAN AT CORNERS
SCALE: 3" = 1'-0"

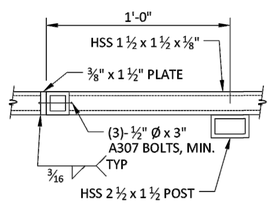

7 S8.0 OPTIONAL SPLICE
SCALE: 3" = 1'-0"

© 2025 - Splashtacular, LLC - All Rights Reserved.

This document is the intellectual property of Splashtacular, LLC, which has exclusive rights to proprietary trade secrets and confidential information contained herein. Receipt of permission to use this document does not convey any rights to use the information contained herein without prior written consent of Splashtacular, LLC.

REVISION HISTORY

MARK	DATE		APPROVED
△	mm/dd/yyyy	ISSUED FOR APPROVAL	
△			
△			
△			
△			

The Structural Support System, foundations, decking/treads, fiberglass components including a finite analysis of the ride path depicted on these drawings were designed under the direction of the Professional Engineer who's seal and signature are affixed to this drawing. Any structural design connections of the slide components that are connected to a building are not by Splashtacular.

SPLASHTACULAR®
Waterslides and Waterpark Attractions
401 N.East Street • Paola, Kansas 66071
P 800.844.5334 • F 913.294.2496

TITLE: STAIR & RAILING DETAILS		
PROJECT: TRANQUILITY HS		
DATE: 03/26/2025	PROJECT NUMBER: 12125	COUNTRY: USA
SCALE: AS NOTED	DESIGNER: DAR	STATE: CALIFORNIA
CHECKED: RRR	APPROVED: RRR	CITY: TRANQULITY

S8.0

COUNTY OF FRESNO ENVIRONMENTAL HEALTH DIVISION
1221 Fulton Street – 3rd Floor (559) 600-3357
APPROVED WITH NOTED CORRECTIONS AND SUBJECT TO FIELD INSPECTIONS
BY: DATE: 8/26/25
APPROVAL OF THIS PLAN DOES NOT CONSTITUTE PERMISSION TO VIOLATE ANY APPLICABLE CITY OR COUNTY ORDINANCE, OR STATE LAW, AND SHALL NOT PREVENT THIS DEPARTMENT FROM REQUIRING CORRECTION OF ERRORS OR OMISSIONS IN PLANS, SPECIFICATIONS OR CONSTRUCTION.

AGD
ARCHITECTURE | DESIGN
ANDREW GOODWIN DESIGNS
1238 MONTEREY STREET
SAN LUIS OBISPO, CA 93422
t: (805) 439-1611
www.andrewgoodwin.us

RSM
Design | Engineering
ROGERS STRINGER MCCLELLAND
1981 N. BROADWAY, SUITE 202
WALNUT CREEK, CA 94596
PH. (925) 217-6619
www.rsm-de.com

These drawings are instruments of service and are the property of Andrew Goodwin Designs, Inc. The information represented on these drawings are exclusively for the project indicated and shall not be transferred or otherwise reproduced without express written permission of Andrew Goodwin.
Copyright 2023

SEAL
NOT FOR CONSTRUCTION

PROJECT
TRANQUILLITY HIGH SCHOOL
AQUATIC CENTER MODERNIZATION
6052 Juanche Ave,
Tranquillity, CA 93668

CLIENT
GOLDEN PLAINS UNIFIED SCHOOL DISTRICT

SHEET TITLE
STAIR & RAILING DETAILS

PHASE DESCRIPTION
100% CD FCHD APPROVAL
SWIMMING POOL

DATE: 8/26/2025
TECHNICIAN:
PROJECT MANAGER:
JOB NUMBER: 791

SHEET NUMBER
WS1.18-1

PLOT DATE: 4/24/2025 3:26:20 PM

Copyright © 2025 RSM, Inc.-All Rights Reserved-This document was prepared for use only by the client, only for the purposes stated, and within a reasonable time from issuance. Non-commercial, educational, and scientific use of this document by regulatory agencies is regarded as a "fair use" and not a violation of copyright. Regulatory agencies may make additional copies of this document for internal use. Copies may also be made available to the public as required by law. The reprint must acknowledge the copyright and indicate that permission to reprint has been received.

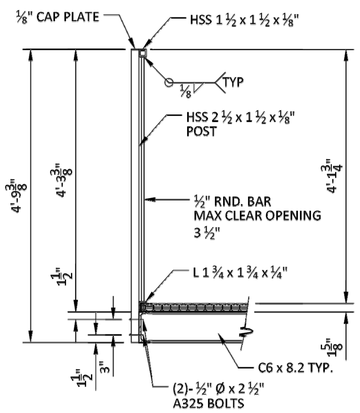

1 S8.1 PLATFORM GUARDRAIL SECTION
SCALE: 1" = 1'-0"

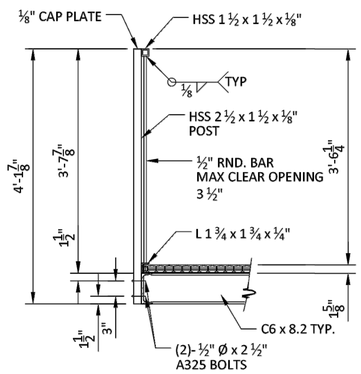

2 S8.1 LANDING GUARDRAIL SECTION
SCALE: 1" = 1'-0"

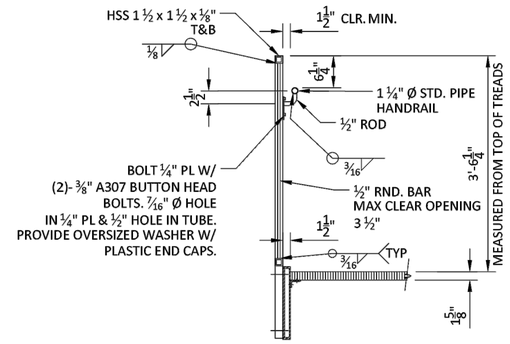

3 S8.1 STAIR GUARDRAIL SECTION
SCALE: 1" = 1'-0"

NOTES:
1. DRILL RELIEF HOLES AS REQ'D FOR GALV. PROCESS
2. RAILING SPACING SHOWN FOR REFERENCE QUANTITY ONLY. AS BUILT SPACING MAY VARY FROM SPACING SHOWN NOT TO EXCEED 48".
3. GRIND ALL EDGES SMOOTH

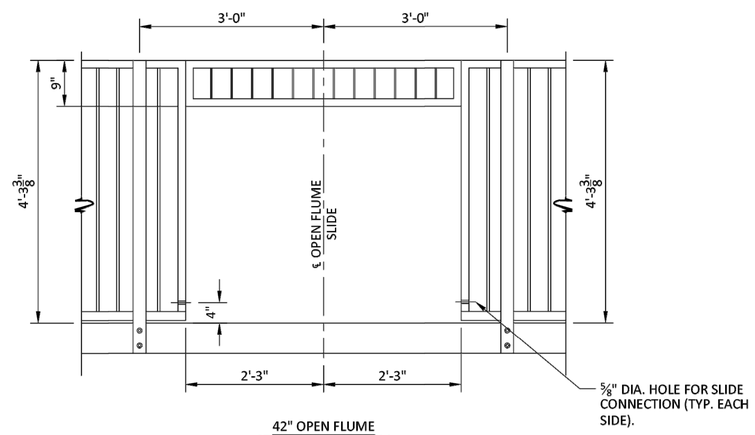

42" OPEN FLUME
STANDARD PLATFORM

NOTES:
1. VIEWS ARE FROM EXTERIOR OF LANDING.
2. FOR DIMENSIONS NOT SHOWN SEE RAILING DETAILS (THIS SHEET).
3. ADJUST DIMENSION FOR INTERSECTION WITH PERPENDICULAR RAIL.

4 S8.1 GUARDRAIL AT SLIDE OPENINGS
SCALE: 1" = 1'-0"

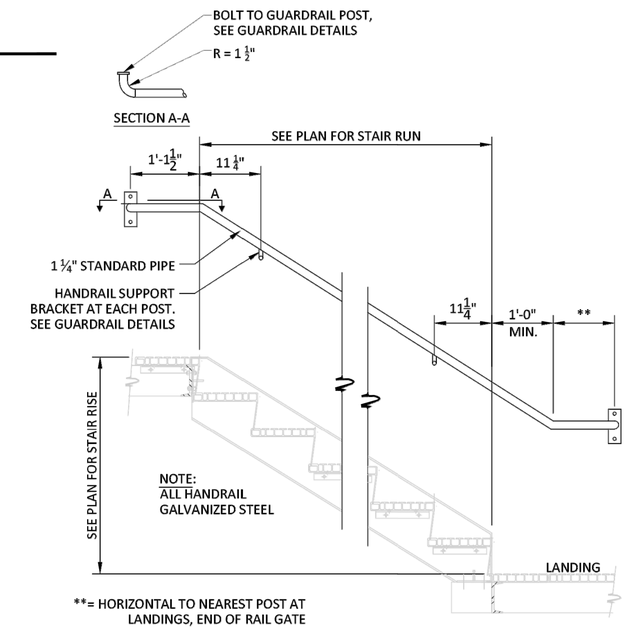

**= HORIZONTAL TO NEAREST POST AT LANDINGS, END OF RAIL GATE

5 S8.1 HANDRAIL DETAILS
SCALE: 1" = 1'-0"

© 2025 - Splashtacular, LLC - All Rights Reserved.

This document is the intellectual property of Splashtacular, LLC, which has exclusive rights to proprietary trade secrets and confidential information contained herein. Receipt of permission to use this document does not convey any rights to use the information contained herein without prior written consent of Splashtacular, LLC.

REVISION HISTORY

MARK	DATE		APPROVED
△	mm/dd/yyyy	ISSUED FOR APPROVAL	
△			
△			
△			
△			

The Structural Support System, foundations, decking/treads, fiberglass components including a finite analysis of the ride path depicted on these drawings were designed under the direction of the Professional Engineer who's seal and signature are affixed to this drawing. Any structural design connections of the slide components that are connected to a building are not by Splashtacular.

SPLASHTACULAR®
Waterslides and Waterpark Attractions
401 N.East Street • Paola, Kansas 66071
P 800.844.5334 • F 913.294.2496

TITLE: STAIR & RAILING DETAILS		
PROJECT: TRANQUILITY HS		
DATE: 03/26/2025	PROJECT NUMBER: 12125	COUNTRY: USA
SCALE: AS NOTED	DESIGNER: DAR	STATE: CALIFORNIA
CHECKED: RRR	APPROVED: RRR	CITY: TRANQULITY

S8.1

COUNTY OF FRESNO ENVIRONMENTAL HEALTH DIVISION
1221 Fulton Street – 3rd Floor (559) 600-3357
APPROVED WITH NOTED CORRECTIONS AND SUBJECT TO FIELD INSPECTIONS
BY: DATE: 8/26/25
APPROVAL OF THIS PLAN DOES NOT CONSTITUTE PERMISSION TO VIOLATE ANY APPLICABLE CITY OR COUNTY ORDINANCE, OR STATE LAW, AND SHALL NOT PREVENT THIS DEPARTMENT FROM REQUIRING CORRECTION OF ERRORS OR OMISSIONS IN PLANS, SPECIFICATIONS OR CONSTRUCTION.

AGD
ARCHITECTURE | DESIGN
ANDREW GOODWIN DESIGNS
1238 MONTEREY STREET
SAN LUIS OBISPO, CA 93422
t: (805) 439-1611
www.andrewgoodwin.us

RSM
Design | Engineering
ROGERS STRINGER MCCLELLAND
1981 N. BROADWAY, SUITE 202
WALNUT CREEK, CA 94596
PH. (925) 217-6619
www.rsm-de.com

These drawings are instruments of service and are the property of Andrew Goodwin Designs, Inc. The information represented on these drawings are exclusively for the project indicated and shall not be transferred or otherwise reproduced without express written permission of Andrew Goodwin.
Copyright 2023

SEAL
NOT FOR CONSTRUCTION
8/26/25

PROJECT
TRANQUILLITY HIGH SCHOOL
AQUATIC CENTER MODERNIZATION
6052 Juanche Ave,
Tranquillity, CA 93668

CLIENT
GOLDEN PLAINS UNIFIED SCHOOL DISTRICT

SHEET TITLE
STAIR & RAILING DETAILS

PHASE DESCRIPTION
100% CD FCHD APPROVAL
SWIMMING POOL

DATE: 8/26/2025
TECHNICIAN:
PROJECT MANAGER:
JOB NUMBER: 791
SHEET NUMBER
WS1.19-1

PLOT DATE: 4/24/2025 3:26:20 PM

Copyright © 2025 RSM, Inc.-All Rights Reserved-This document was prepared for use only by the client, only for the purposes stated, and within a reasonable time from issuance. Non-commercial, educational, and scientific use of this document by regulatory agencies is regarded as a "fair use" and not a violation of copyright. Regulatory agencies may make additional copies of this document for internal use. Copies may also be made available to the public as required by law. The reprint must acknowledge the copyright and indicate that permission to reprint has been received.

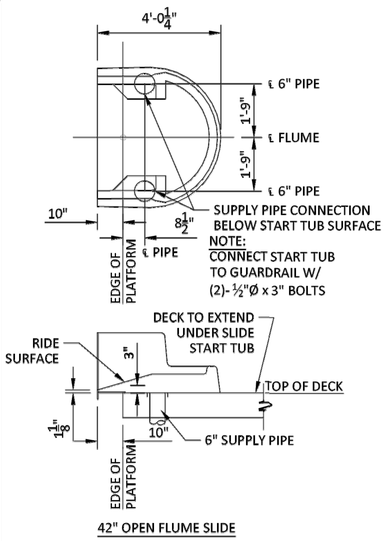

1 S9.0 SLIDE START TUB DETAILS
SCALE: 1/2" = 1'-0"

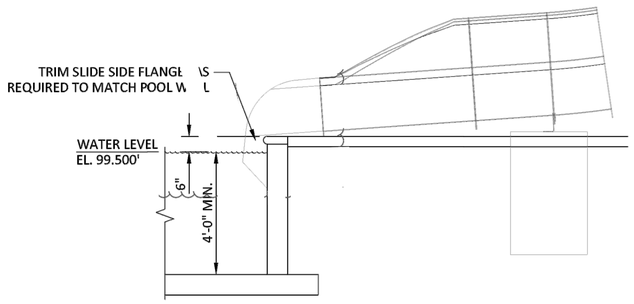

2 S9.0 SLIDE EXIT POOL DETAILS
SCALE: 1/2" = 1'-0"

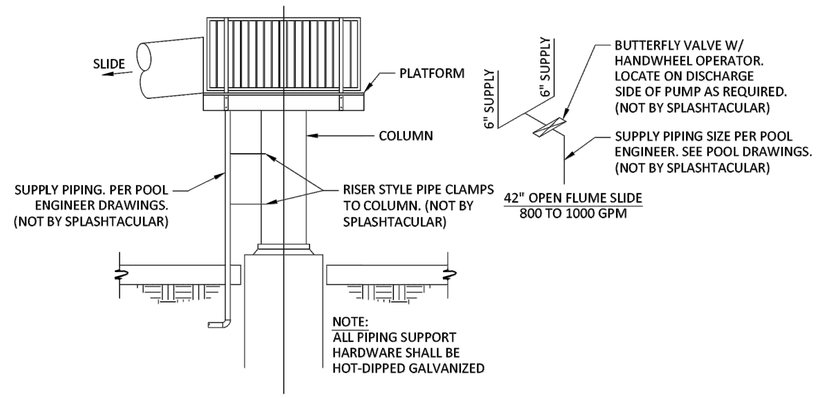

3 S9.0 MECHANICAL SCHEMATIC
SCALE: 1/2" = 1'-0"

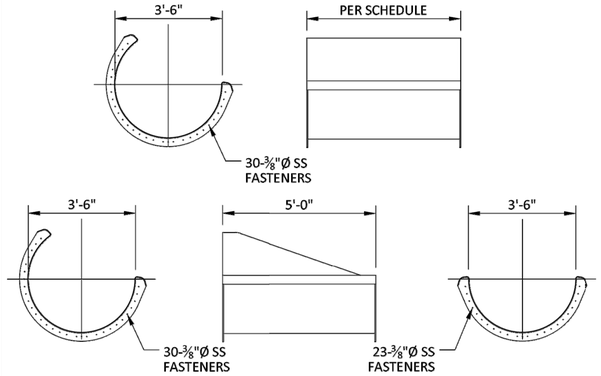

4 S9.0 42" OPEN FLUME SLIDE TYPICAL SECTION DETAILS
SCALE: 1/2" = 1'-0"

© 2025 - Splashtacular, LLC - All Rights Reserved.

This document is the intellectual property of Splashtacular, LLC, which has exclusive rights to proprietary trade secrets and confidential information contained herein. Receipt of permission to use this document does not convey any rights to use the information contained herein without prior written consent of Splashtacular, LLC.

REVISION HISTORY

MARK	DATE		APPROVED
△	mm/dd/yyyy	ISSUED FOR APPROVAL	
△			
△			
△			
△			

The Structural Support System, foundations, decking/treads, fiberglass components including a finite analysis of the ride path depicted on these drawings were designed under the direction of the Professional Engineer who's seal and signature are affixed to this drawing. Any structural design connections of the slide components that are connected to a building are not by Splashtacular.

SPLASHTACULAR®
Waterslides and Waterpark Attractions
401 N.East Street • Paola, Kansas 66071
P 800.844.5334 • F 913.294.2496

TITLE: SLIDE ENTRY, EXIT & PART DETAILS		
PROJECT: TRANQUILITY HS		
DATE: 03/26/2025	PROJECT NUMBER: 12125	COUNTRY: USA
SCALE: AS NOTED	DESIGNER: DAR	STATE: CALIFORNIA
CHECKED: RRR	APPROVED: RRR	CITY: TRANQULITY

S9.0

COUNTY OF FRESNO ENVIRONMENTAL HEALTH DIVISION
1221 Fulton Street - 3rd Floor (559) 600-3357
APPROVED
WITH NOTED CORRECTIONS AND SUBJECT TO FIELD INSPECTIONS
BY: DATE: 8/26/25
APPROVAL OF THIS PLAN DOES NOT CONSTITUTE PERMISSION TO VIOLATE ANY APPLICABLE CITY OR COUNTY ORDINANCE, OR STATE STATUTE AND SHALL NOT PREVENT THIS DEPARTMENT FROM REQUIRING CORRECTION OF ERRORS OR OMISSIONS IN PLANS, SPECIFICATIONS OR CONSTRUCTION.

AGD
ARCHITECTURE | DESIGN
ANDREW GOODWIN DESIGNS
1238 MONTEREY STREET
SAN LUIS OBISPO, CA 93422
t: (805) 439-1611
www.andrewgoodwin.us

RSM
Design | Engineering
ROGERS STRINGER MCCLELLAND
1981 N. BROADWAY, SUITE 202
WALNUT CREEK, CA 94596
PH. (925) 217-6619
www.rsm-de.com

These drawings are instruments of service and are the property of Andrew Goodwin Designs, Inc. The information represented on these drawings are exclusively for the project indicated and shall not be transferred or otherwise reproduced without express written permission of Andrew Goodwin.
Copyright 2023

SEAL
NOT FOR CONSTRUCTION
8/26/25

PROJECT
TRANQUILLITY HIGH SCHOOL
AQUATIC CENTER MODERNIZATION
6052 Juanche Ave,
Tranquillity, CA 93668

CLIENT
GOLDEN PLAINS UNIFIED SCHOOL DISTRICT

SHEET TITLE
SLIDE ENTRY, EXIT & PART DETAILS

PHASE DESCRIPTION
100% CD FCHD APPROVAL
SWIMMING POOL

DATE: 8/26/2025
TECHNICIAN:
PROJECT MANAGER:
JOB NUMBER: 791

SHEET NUMBER
WS1.20-1

PLOT DATE: 4/24/2025 3:26:20 PM

Copyright © 2025 RSM, Inc.-All Rights Reserved-This document was prepared for use only by the client, only for the purposes stated, and within a reasonable time from issuance. Non-commercial, educational, and scientific use of this document by regulatory agencies is regarded as a "fair use" and not a violation of copyright. Regulatory agencies may make additional copies of this document for internal use. Copies may also be made available to the public as required by law. The reprint must acknowledge the copyright and indicate that permission to reprint has been received.